Beechcraft

Travel Air

PARTS CATALOG

95 (TD-1 Thru TD-302)

B95 (TD-303 Thru TD-452)

B95A (TD-453 Thru TD-533)

D95A (TD-534 Thru TD-707)

E95 (TD-708 And After)

PUBLISHED BY
PARTS AND SERVICE OPERATIONS
BEECH AIRCRAFT CORPORATION
WICHITA, KANSAS 67201
U. S. A.

95-590018B
REISSUED JULY 12, 1963

95-590018B1
REVISED DECEMBER, 1967

Listed below are the pages required for this publication, with effectivity current through the revision and/or reissue code shown on the lower right hand corner of this page, and on the title page. Each page is followed by an entry that denotes whether the page is still as originally issued or is a part of some later revision or reissue.

LIST OF EFFECTIVE PAGES

Always destroy superseded pages when you insert revised pages.

LOG OF REVISIONS

B	July 12, 1963
B1	December, 1967

EFFECTIVE PAGES

*Title and A	B1	2-80 thru 2-86	B	*2-230A and 2-230B	B1
i and ii	B	*2-87 and 2-88	B1	*2-231	B1
*iii	B1	*2-88A and 2-88B	B1	2-232	B
*1-1 thru 1-12	B1	2-89 thru 2-116	B	*2-233 and 2-234	B1
2-1 thru 2-4	B	*2-116A and 2-116B	B1	2-235 and 2-236	B
*2-5 thru 2-7	B1	*2-117	B1	*2-237 thru 2-242	B1
2-8 thru 2-10	B	2-118 thru 2-128	B	*2-242A and 2-242B	B1
*2-11 thru 2-13	B1	*2-129 and 2-130	B1	*2-243	B1
2-14 and 2-15	B	2-131 thru 2-159	B	2-244 thru 2-259	B
*2-16	B1	*2-160 thru 2-166	B1	*2-260 thru 2-264	B1
*2-16A and 2-16B	B1	*2-166A and 2-166B	B1	2-265 thru 2-295	B
*2-17	B1	*2-167	B1	*2-296 thru 2-298	B1
2-18	B	2-168 and 2-169	B	*2-298A and 2-298B	B1
*2-19 thru 2-24	B1	*2-170 thru 2-172	B1	*2-299	B1
*2-24A thru 2-24C	B1	*2-172A and 2-172B	B1	2-300 thru 2-315	B
*2-25 and 2-26	B1	*2-173	B1	*2-316 thru 2-323	B1
*2-26A thru 2-26C	B1	2-174 thru 2-180	B	2-324 and 2-325	B
*2-27 thru 2-34	B1	*2-181 and 2-182	B1	*2-326 thru 2-328	B1
*2-34A	B1	2-183 thru 2-185	B	2-329 thru 2-334	B
2-35 and 2-36	B	*2-186 thru 2-188	B1	*2-335 thru 2-340	B1
*2-36A thru 2-36C	B1	*2-188A	B1	*2-340A and 2-340B	B1
2-37 and 2-38	B	2-189	B	*2-341	B1
2-38A	B	*2-190	B1	2-342	B
2-39 and 2-40	B	2-191 thru 2-194	B	*2-343 thru 2-348	B1
2-40A	B	*2-195 and 2-196	B1	*2-348A and 2-348B	B
2-41 thru 2-53	B	*2-196A	B1	2-349	B1
*2-54 thru 2-56	B1	2-197 thru 2-205	B	*2-350 thru 2-360	B1
*2-56A thru 2-56H	B1	*2-206 thru 2-208	B1	*2-360A thru 2-360E	B
*2-57	B1	*2-208A thru 2-208E	B1	2-361 thru 2-366	B1
2-58 thru 2-74	B	2-209 thru 2-214	B	*2-367 thru 2-386	B1
*2-75 thru 2-78	B1	*2-215 thru 2-219	B1	*3-1 thru 3-34	B
*2-78A thru 2-78F	B1	2-220 thru 2-225	B	4-1 thru 4-46	
*2-79	B1	*2-226 thru 2-230	B1		

NOTE: The asterisk denotes pages in current revision.

B1

Basic publications are assigned a part number which appears on the title page with the date of the issue. Subsequent revisions are identified by the addition of a revision code after the part number. A_1 after a part number denotes the first revision to the basic publication, A_2 the second, etc. Occasionally, it is necessary to completely reissue and reprint a publication for the purpose of obsoleting a previous issue and outstanding revisions thereto. As these replacement reissues are made, the code will also change to the next successive letter of the alphabet at each issue. For example, B for the first reissue, C for the second reissue, etc.

When ordering a handbook, give the basic number, and the reissue code when applicable, if a complete up-to-date publication is desired. Should only revision pages be required, give the basic number and revision code for the particular set of revision pages you desire.

HOW TO USE THIS CATALOG

This Illustrated Parts Catalog contains listings of replacement parts for the Beechcraft Model 95 Travel Air. An explanation of each section in the catalog and information for ordering replacement parts are shown in the following paragraphs.

SECTION 1 - ALPHABETICAL INDEX

The Alphabetical Index contains a listing of item descriptions arranged in alphabetical order and referenced by figure number to their location in section 2, Illustrated Parts List. For convenience each page in Section 2 contains a block in the upper corner which refers to the particular figure number.

SECTION 2 - ILLUSTRATED PARTS LIST

The Illustrated Parts List consists of the complete airplane broken down into assemblies, sub-assemblies, detail parts, and attaching parts. A separation symbol (----*----) follows the listing of attaching parts to distinguish them from assembly breakdown.

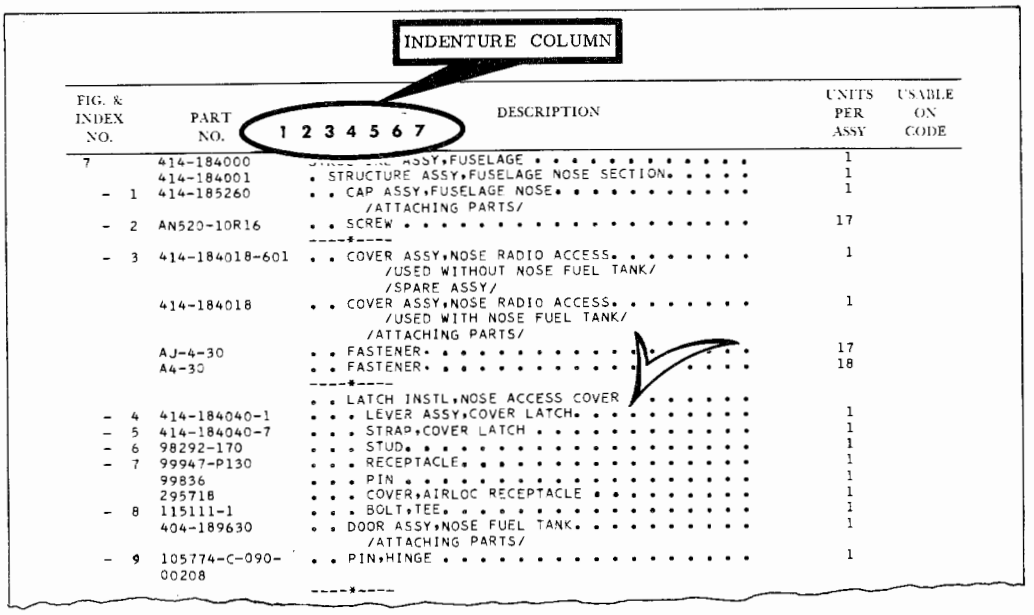

INDENTURE COLUMN

FIG. & INDEX NO.	PART NO.	1 2 3 4 5 6 7 DESCRIPTION	UNITS PER ASSY	USABLE ON CODE
7	414-184000	STRUCTURE ASSY,FUSELAGE	1	
	414-184001	. STRUCTURE ASSY,FUSELAGE NOSE SECTION.	1	
- 1	414-185260	. . CAP ASSY,FUSELAGE NOSE.	1	
		/ATTACHING PARTS/		
- 2	AN520-10R16	. . SCREW	17	
		----*----		
- 3	414-184018-601	. . COVER ASSY,NOSE RADIO ACCESS.	1	
		/USED WITHOUT NOSE FUEL TANK/		
		/SPARE ASSY/		
	414-184018	. . COVER ASSY,NOSE RADIO ACCESS.	1	
		/USED WITH NOSE FUEL TANK/		
		/ATTACHING PARTS/		
	AJ-4-30	. . FASTENER.	17	
	A4-30	. . FASTENER.	18	
		----*----		
		. . LATCH INSTL,NOSE ACCESS COVER		
- 4	414-184040-1	. . . LEVER ASSY,COVER LATCH.	1	
- 5	414-184040-7	. . . STRAP,COVER LATCH	1	
- 6	98292-170	. . . STUD.	1	
- 7	99947-P130	. . . RECEPTACLE.	1	
	99836	. . . PIN	1	
	295718	. . . COVER,AIRLOC RECEPTACLE	1	
- 8	115111-1	. . . BOLT,TEE.	1	
	404-189630	. . DOOR ASSY,NOSE FUEL TANK.	1	
		/ATTACHING PARTS/		
- 9	105774-C-090-00208	. . PIN,HINGE	1	
		----*----		

The Section 2 excerpt above shows the indenture system used to indicate parts included in any given assembly. By this indenture system, parts shown in column 2 are component parts of the immediately preceding assembly in column 1; parts shown in column 3 are component parts of the immediately preceding assembly in column 2, etc., through column 7. As an example, if the latch assembly is ordered (See checked item in above illustration), the lever assy (index 4) and strap (index 5) would be received. If the nose section structure assembly is ordered, the latch assembly and its components plus the fuel tank door assembly and its components would be received.

If two assemblies are made up of a majority of identical parts, or the assemblies are opposite, i.e., left and right hand, the assemblies are listed together with their detail parts listed as common for both assemblies. In this case, only the left or right hand part, but not both, is indexed and illustrated, with the difference between left and right hand parts noted in the description column.

The Units Per Assembly column indicates the number of detail parts required per assembly. When a spare assembly has the note (Spare Assy, See Section 4 For Components) following the description, a list of the components will be found in Section 4, Spare Assembly Components. The notation "(See Fig.___)" indicates that this assembly and its detail parts are illustrated and broken down in another figure. When "(See Fig.___ for NHA)" follows the description and "REF" is in the Units per Assembly column, this assembly is a detail of the next higher assembly figure.

When a number is shown in the Usable On Code column, refer to the code at the end of the listing of parts for that particular figure to determine aircraft serial effectivity. Each figure has its own distinct coding, i.e., the code number denoting serial effectivity for one figure will not be the same for another figure.

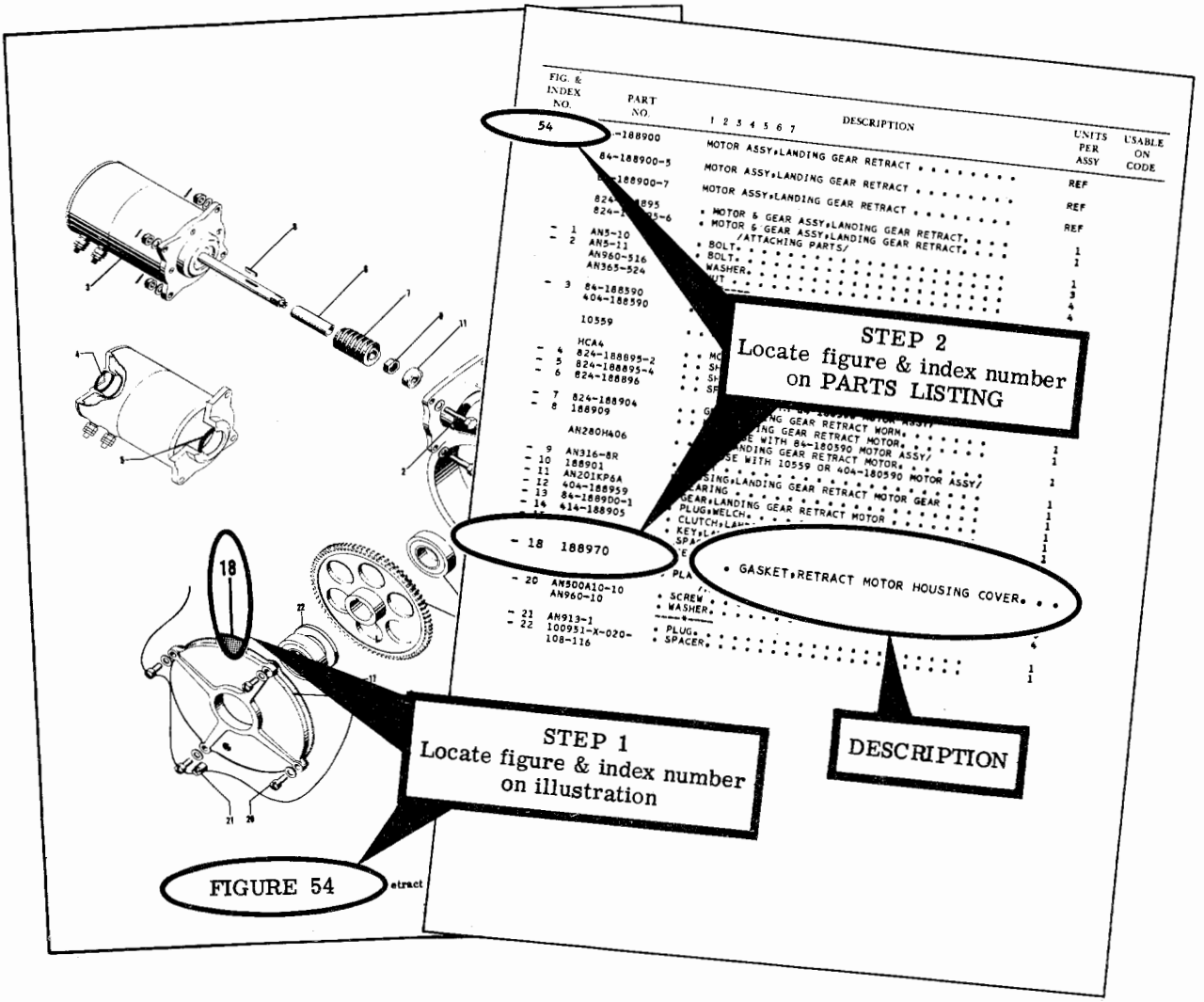

How To Locate A Part When The Description Is Known

Consult Section 1, Alphabetical Index, for the figure in Section 2 in which the part is listed. Immediately preceding the listing of parts in Section 2 is an illustration for each figure; locate the necessary part in the illustration (see step 1 in the excerpt shown above). The index number adjacent to the illustrated part will appear in the listing of parts in the column entitled "Figure and Index Number" (see step 2 above). Immediately to the right of the index number will be found the required part number. See the paragraph entitled SECTION 3 - ALPHA-NUMERICAL INDEX for locating parts when the part number is known.

SECTION 3 - ALPHA-NUMERICAL INDEX

This section of the catalog is a complete alpha-numerical listing, presented in tabular form, of each part number listed in Section 2, Illustrated Parts List. Parts common to more than one figure or assembly will be listed once in Section 3 for each time it appears in Section 2 in order to reflect the different figures. It will be necessary to check each figure referenced by these common parts in order to find the desired installation.

How To Locate A Part When The Part Number Is Known

If the part number is known and the Illustrated Parts List must be consulted for model applicability or description, refer to Section 3, Alpha-Numerical Index, for the figure and index number of the required part (refer to the excerpt shown below).

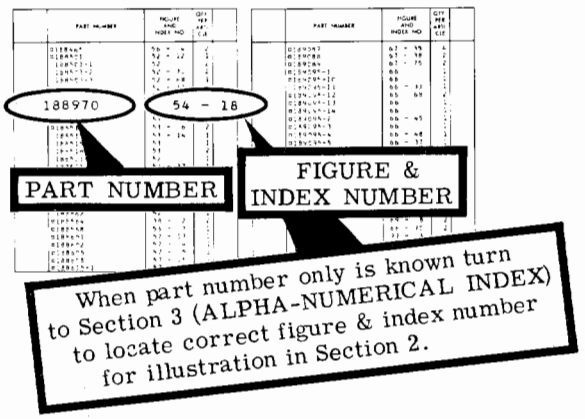

SECTION 4 - SPARE ASSEMBLY COMPONENTS

Most of the spare assemblies listed in Section 2 appears in this section with a tabular listing of their components. Before ordering a spare assembly, check this section to find out what you will get.

IMPORTANT! WHEN ORDERING PARTS

When ordering parts, always use the COMPLETE manufacturer's part number listed in the Part Number column.

Delays in filling spare parts orders often occur as a result of incomplete information being furnished with the original order, i.e., lack of model designation, serial number and date of manufacture. The original order should always contain the information indicated by check marks on the placard shown, in addition to the correct part number and description or any pertinent information which might further define the parts required.

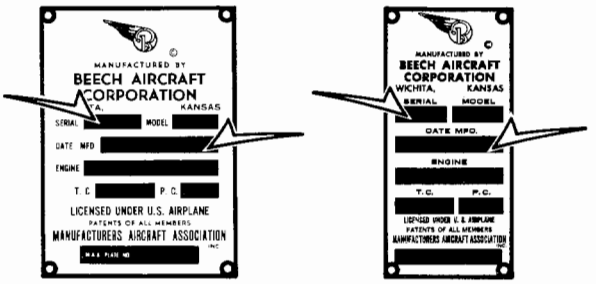

(TD-1 thru TD-701) (TD-702 And After)

The serial placard (TD-1 thru TD-701) shown above is located approximately 9 3/4" forward of the Tail Cone Assembly on the bottom exterior section of the fuselage. The serial placard (TD-702 And After) shown above is located on the R.H. side fuselage skin adjacent to the flap.

Address all orders to: Parts and Service Operations
Beech Aircraft Corporation
Wichita 1, Kansas 67201
U.S.A.

WARNING

The parts catalog has but one function: To facilitate ordering replacement parts for the Beechcraft Model 95 Travel Air.

Illustrations in this catalog are to be used only as aids in identifying parts and should not be used as a maintenance reference for reassembly.

ALPHABETICAL INDEX

PART NAME	FIGURE NO.
A	
Access Doors, Wing	18
Accessories	7
Accumulator, Propeller Governor Unfeathering	56
Actuator	
Aileron Tab	31
Cover, Flap	18
Cowl Flap	52
Elevator Tab	27
Flap	24
Landing Gear Hand Crank	39
Landing Gear Switch	38
Main Landing Gear Retract	39
Main Landing Gear Safety System	71
Motor, Landing Gear	39
Rudder Trim Tab	28
Cabin Seats	13C, 13D, 13E
Support, Landing Gear	23
Aileron	20, 21, 21A
Flight Controls	31
Skin	3, 4, 4A
Tab Actuator	31
Tab Flight Controls	31
Tab Indicator	58, 58A
Trim Tab Control	60
Airspeed Indicator	61A, 61B, 61C
Air	
Blower	48, 48B
Box, Carburetor	53
Induction, Engine	53
Inlet Screen	48
Filter, Induction	53, 53A
Plenum, Heater Inlet	48
System, Fresh	47C
Valve, Fresh	47C
Alcor Unit	49C
Alternator	
Engine	49I
Paralleling Relay	49C
Switch	63
Altimeter	61, 61A, 61B, 61C
Ammeter	61, 61A, 61B, 61C
Anti-Icer	
Propeller	65, 66
Pump	48D, 65, 66
Quantity Gage	61B
Shoe	49K
Arm	
Control Column Throwover	60
Nose Gear Retract Idler	42
Nose Steering Torque	44
Steering Rod Idler	44
Armature	
Blower	48B
Generator	49J
Starter	49I
Voltage Regulator Relay	49H
Armrest	14, 14A, 14B, 14C
Center	13C
Fifth Seat	12B
A	
Ash Tray	14, 14A, 14B, 14C
Assist Step	16, 16A
Actuating Cable	16
Cord	16
Retract	16
Support	16
Axle & Socket, Main Landing Gear	36A, 37
B	
Baffles, Engine	50
Baggage	
Compartment Strap	14, 14A, 14B, 14C
Door	9
Door Latch	9, 9A
Door, Nose	8A
Door Panel	14, 14A, 14B, 14C
Door Seal	9, 9A
Balance Weight	
Propeller	49K
Rudder	30
Ball Joint, Exhaust	49C
Barrel	
Nose Gear Shock Absorber	41, 41A
Nose Wheel Steering	44
Battery	63
Box	8
Box Lid	8
Ignition Switch	63
Master Relay	63
Beacon, Rotating	63
Bearing	
Main Wheel	37, 37B, 37C, 37I
Rudder Hinge	28
Bellcrank	
Aileron	31
Cowl Flap	52A
Elevator	34
Rudder	34
Rudder Pedals	35
Belt	
Generator	49, 49C
Safety	13, 13A, 13B
Bendix Fuel Injection	49D
Bladder, Fuel Cell	57, 57A, 57D
Blade, Propeller Anti-Icer	65, 66
Blast Tube, Generator	49C, 50
Blower	
Armature	48B
Heater	48, 48A, 48B
Mounting Bracket, Heater	48
Boost Pump, Fuel	57, 57A, 57D
Boot	
Deicer	67, 68, 69, 70
Landing Gear Handle	14C
Landing Gear Up Lock	38
Nose Wheel Straightener	44
Rudder Pedal	14, 14A, 14B, 14C

ALPHABETICAL INDEX

PART NAME	FIGURE NO.
B	
Bottle, Oxygen	64, 64A
Box	
Battery	8
Carburetor Air	53
External Power	63
Glove	61C
Oxygen Mask Storage	64A
Brace	
Landing Gear Retract	38
Nose Gear Shock Absorber	41, 41A
Bracket	
Aileron Tab Actuator	31
Elevator Bellcrank	34
Engine Controls	54
Engine Exhaust Stack	49, 49C
Flap	22, 22A
Heater Blower Mounting	48, 48A
Brake	37D, 37E, 37F, 37G, 37H, 37I
Bleeder Valve	37D, 37E, 37F, 37G, 37H, 37I
Disc	37D, 37E, 37F, 37G, 37H, 37I
Fluid Reservoir	46
Housing	37D, 37E, 37F, 37G, 37H, 37I
Lining	37D, 37E, 37F, 37G, 37H, 37I
Master Cylinder	46, 47
Plumbing, Hydraulic	46
Valve, Parking	46, 47A
Breaker	
Circuit	61, 61A, 61B, 61C
Panel, Circuit	61A, 61B
Brush	
Flap Motor	25, 25A
Generator	49J
Holder & Lead	48B
Starter	49I
Buckle, Seat Belt	13C, 13D, 13E
Bulb	
Oil Temperature	49, 49C
Overhead Light	47C, 47D
Bulkhead Diagram, Fuselage	5
C	
Cabin	
Door	10
Door Cable	10
Door Handle	10
Door Hinge	10
Door Latch	10
Door Seal	10
Heat & Vent	48, 48A
Heater	48C
Heater Air Duct	48, 48A
Heater Thermostat	48, 48A
Structure	8
Window	11
Window Latch	11
Window Seal	11
Cable	
Cable (Contd)	
Aileron & Aileron Tab	31
Assist Step Actuating	16
Cabin Door	10
Cowl Flap	52A
Elevator & Elevator Tab	32
Elevator Tab	27
Main Gear Up Lock	38
Nose Gear Ground	41, 41A
Rudder & Rudder Tab	33
Cagle Brake	37D
Cam	
Flap Limit Switch	22A
Heater Switch Control	48
Nose Baggage Door Lock	8
Cap	
Anti-Icer Tank	65, 66
Fuel Tank	57, 57E
Oxygen Recharge Valve	64, 64A
Carburetor	
Air Box	53
Air Temperature Indicator	61, 61A
Engine	49
Gasket	49B
Heat Control	54
Heat Duct	49
Carpet	14, 14A, 14B, 14C
Cell, Fuel	57, 57A, 57D
Chain	
Aileron & Aileron Tab	31
Control Wheel	60
Elevator Tab	27
Check Valve, Fuel	57, 57A, 57D
Cigarette Lighter	63
Circuit	
Breakers	61, 61A, 61B, 61C
Breaker Panel	61A, 61B
Clock	14, 14A, 60, 61, 61C
Closure, Wing Tip	19, 19A
Coil	
Generator Field	49J
Starter Field	49I
Collar, Nose Gear Steering Idler	41A, 44
Compass	11
Cone	
Nose	17
Tail	17
Console	
Control	58, 58A
Cover	58, 58A
Oxygen	64, 64A
Control	
Aileron	31
Aileron Trim Tab	60
Column	59
Column Hanger	58, 58A
Column Throwover Arm	60
Console	58, 58A
Defroster Push Pull	48A

ALPHABETICAL INDEX

PART NAME	FIGURE NO.
C	
Control (Contd)	
Elevator & Elevator Tab Flight	32
Engine	54
Engine Unit	58
Fresh Air	47C, 47D
Heater Push Pull	48, 48A
Iris Valve	48
Levers, Engine	58, 58A
Mechanism, Flap	23
Nose Shock Absorber	41, 41A
Parking Brake Valve	46
Rudder & Rudder Tab Flight	33
Support	58
Wheel	60
Cooler, Oil	49, 49C
Copilots Seat	13C
Counterweight, Propeller	49K
Cover	
Flap Actuator	18
Front Seat Structure	14, 14A, 14B, 14C
Console	58, 58A
Map Light	47D
Master Cylinder	46
Seat	13C, 13D, 13E
Cowl Flap	
Electrical	52
Indicator Light	61A
Mechanical	52A
Cowling, Engine	51
Crank, Landing Gear Actuator Hand	39
Curtain, Window	14, 14A, 14B, 14C
Cushion	
Fifth Seat	12B
Seat	13C, 13D, 13E
Cylinder	
Brake Master	46, 47
Head Temperature Indicator	61C, 61B
Oxygen	64, 64A
D	
Dampener, Nose Gear Shimmy	41A, 43
Deflector, Rear Seat Air	48
Defroster	48, 48A
Valve	48, 48A
Deicer	
Boot	67, 68, 69, 70
Filter	67, 68, 69, 70
Gage	67, 68, 69, 70
Pressure Gage	61B
System	67, 68, 69, 70
Diagram	
Exterior Placard	6
Fuselage Bulkhead	5
Fuselage Skin	3, 4, 4A
Fuselage Station	1
Horizontal Stabilizer Station	1
Vertical Stabilizer Station	1
D	
Diagram (Contd)	
Wing Skin	2
Wing Station	1
Diaphragm, Unfeathering Accumulator	56
Diffuser, Heater	48, 48A
Dipstick, Oil	49C
Directional Gyro	61, 61A, 61B, 61C
Disc Brake	37D, 37E, 37F, 37I
Discharger, Static	20
Door	
Baggage	9, 9A
Cabin	10
Carburetor Air Box	53
Cowl Flap	52, 52A
Cowling	51
Curtain	14A, 14B, 14C
Engine Nacelle	18
External Power	63
Fuel Cell Access	18
Glove Box	61C
Handle Bushing	10
Handle Pin	10
Handle Shaft	10
Hinge, Landing Gear	40
Hinge, Nose Wheel	45
Induction Air	53, 53A
Latch, Baggage	9
Main Landing Gear	40
Map Box	15
Nose Access	8, 8A
Nose Wheel	45
Overhead Fresh Air	47D
Panel	14, 14A, 14B, 14C
Retract Rod, Landing Gear	38
Seal, Baggage	9
Seal, Cabin	10
Seal, Main Landing Gear	19, 19A
Wing Main Section	18
Dorsal Fin Skin	3, 4, 4A
Fairing	8
Drain Valve, Fuel	57, 57A, 57C, 57D
Duct	
Cabin Heater Air	48, 48A
Carburetor Heat	49
Fresh Air	47C
Windshield Defrost	48
E	
Electrical	
Equipment	63
Harness, Main Gear	36
Elevator	29
Balance Weight	29
Bellcrank	34
Down Spring	34
Flight Controls	32
Flight Controls, Rear Fuselage	34

ALPHABETICAL INDEX

PART NAME	FIGURE NO.
E	
Elevator (Contd)	
Hinge	26, 67
Horn Skin	29
Skin	3, 4, 4A
Static Discharger	29
Tab Actuator	27
Tab Chain & Cable	27
Tab Flight Controls	32
Tab Indicator	58, 58A
Tab Skin	3, 4, 4A
Trim Tab	29
Empennage	26
Engine	49, 49A, 49C
Air Induction	53
Baffles	50
Carburetor	49
Controls	54
Control Levers	58, 58A
Control Shaft	58
Cowling	51
Cylinder Thermocouple	49
Exhaust Stack	49, 49C
Exhaust Stack Bracket	49, 49C
Exhaust Tube	49
Fuel Injection	49A
Fuel Pump	49, 49C
Gage	61, 61A
Hour Meter	61C
Magneto	49, 49C
Mount	49, 49C
Nacelle	18
Nacelle Door	18
Nacelle Fairing	18
Oil Drain Plug	49
Oil Drain Valve	49
Oil Separator	49A
Tachometer	61, 61A, 61B, 61C
Unit Control	58
Vacuum Pump	49A
Exhaust	
Engine	49, 49C
Shroud, Heater	48
Stack, Engine	49C
Stack Flange	49C
Temperature Probe	49C
Exterior Placard	6
External Power Box	63
F	
Fairing	
Dorsal Fin	8
Engine Nacelle	18
Fuselage Nose	17
Feathering	
Spring, Propeller	49K
Stop, Propeller	49K

PART NAME	FIGURE NO.
F	
Field Coil	
Generator	49J
Starter	49I
Fifth Seat	12B
Armrest	12B
Cushion	12B
Filler Cap Cover, Flush	18
Filter	
Deicer	67, 68, 69, 70
Heater Blower	48B
Induction Air	53, 53A
Screen, Pump	48D
Flange, Exhaust Stack	49C
Flap	22, 22A
Actuator	24
Actuator Cover	18
Control Mechanism	23
Electrical Cowl	52
Hinge Roller	18
Indicator Light, Cowl	61A
Limit Switch	63
Mechanical Cowl	52A
Motor	25, 25A
Position Light	61B
Position Indicator Light	63
Skin	3, 4, 4A
Switch	58, 58A
Up-Down Lights	58A
Flasher	
Landing Gear Warning Horn	63
Navigation Light	63
Flight Controls	
Aileron & Aileron Tab	31
Elevator & Elevator Tab	32
Rear Fuselage Elevator	34
Rudder & Rudder Tab	33
Flight Hour Meter	61C
Floating Instrument Panel	61, 61A, 61B
Flow Meter, Fuel	61C
Former, Wing	19
Frames, Window	11
Fresh Air System	47C, 47D
Front	
Seat	12, 12C, 13C
Spar, Wing	18
Fuel	
Boost Pump	57, 57A, 57D
Cell Access Door	18
Flow Meter	61C
Gage	61, 61A, 61B, 61C
Injection System	49B, 49D
Injector Pump	49B
Injector Shroud	49B
Pressure Gage	61B
Pump, Engine	49C
Pump, Gasket	49B
Pump Heat Shroud	49C
Selector Valve	57, 57B, 57D, 57F, 57G
Strainer	57H

ALPHABETICAL INDEX

PART NAME	FIGURE NO.
F	
Fuel (Contd)	
System	57, 57A, 57B, 57C, 57D
Fuse, Heater	63
Fuselage	
Bulkhead Diagram	5
Nose Cone	17
Skin Diagram	3, 4, 4A
Station Diagram	1
Structure	8
Tail Cone	17
G	
Gage	
Anti Icer Quantity	61B
Deicer	67, 68, 69, 70
Deicer Pressure	61B
Engine	61, 61A
Fuel	61, 61A, 61B, 61C
Fuel Pressure	61B
Manifold Pressure	61, 61C
Oil Pressure	61B, 61C
Oil Temperature	61B
Oxygen	64, 64A
Suction	61, 61A, 61B, 61C
Gasket	
Battery Box Lid	8
Carburetor	49B
Heater Blower	48A
Fuel Pump	49B
Pump	48D
Gear	
Main Landing	36, 37, 37A
Nose Landing	41, 41A
Starter Reduction	49I
Up Lock, Main Landing	38
Generator	49J
Belt	49, 49C
Blast Tube	49C, 50
Switch	63
Glare Shield, Instrument Panel	14, 14A, 14B, 14C, 14D
Glass, Window	11, 11A
Glove Box	61C
Governor	
Control, Propeller	54
Propeller	49E
Grill, Overhead Speaker	47C, 47D
Ground Cable, Nose Gear	41, 41A
Gyro	
Directional	61, 61A, 61B, 61C
Horizon	61, 61A, 61B, 61C
H	
Handle	
Cabin Door	10
Front Seat	12C
Handle (Contd)	
Seat Adjust	13C
Hanger, Control Column	58, 58A, 59
Headliner Panel	14, 14A, 14B, 14C
Headrest	
Chair	14, 14A, 14B, 14C
Jump Seat	12A
Heat & Vent, Cabin	48, 48A
Heater	
Air Diffuser	48, 48A
Air Plenum	48, 48A
Blower	48A
Blower Gasket	48, 48A
Blower Mounting Bracket	48, 48A
Cabin	48A
Control, Push Pull	48, 48A
Diffuser	48, 48A
Exhaust Shroud	48, 48A
Fuel Pump	48D
Fuse	63
Ignition	48, 48A
Iris Valve & Control Assy.	48A
Safety Switch	48, 48A
Switch Control Bushing	48, 48A
Switch Control Cam	48
Hinge	
Aileron	20, 21, 21A
Baggage Door	9
Cabin Door	10
Cabin Window	11
Cowl Flap Door	52, 52A
Cowling Door	51
Elevator	26, 27
Landing Gear Door	40
Nose Access Door	8, 8A
Nose Wheel Door	45
Rudder	28, 34
Wing Main Section	19
Horizon Gyro	61, 61A, 61B, 61C
Horizontal Stabilizer	27
Skin	3, 4, 4A
Station Diagram	1
Horn	
Flasher, Landing Gear Warning	63
Landing Gear Warning	63
Rudder	30
Hour Meter	
Engine	61C
Flight	61C
Hub Spider, Propeller	49K
I	
Idler	
Arm, Nose Gear Retract	42
Arm Shaft	44
Arm, Steering Rod	44
Collar, Nose Gear Steering	44

ALPHABETICAL INDEX

PART NAME	FIGURE NO.
I	
Ignition	
Heater	48, 48A
Panel	63
Switch,Battery	63
Indicator	
Aileron Tab	58, 58A
Airspeed	61A, 61B, 61C
Carburetor Air Temperature	61, 61A
Cylinder Head Temperature	61B, 61C
Elevator Tab	58, 58A
Landing Gear	58, 58A
Light, Cowl Flap	61A
Light, Flap Position	63
Light, Landing Gear	63
Light, Stall Warning	63
Light, Tab	63
Manifold Pressure	61A, 61B
Oil Temperature	61C
Outside Air Temperature	11
Oxygen Pressure	64
Rate of Climb	61, 61A, 61B, 61C
Rudder Tab	58, 58A
Turn & Bank	61, 61A, 61B, 61C
Induction System	53, 53A
Injection Components, Fuel	49D
Inspection Plate, Wing	18
Instrument	
Light	61
Panel	61, 61A, 61B, 61C
Panel, Floating	61, 61A, 61B
Panel Glare Shield	14, 14A, 14B, 14C
Panel Trim	15
Plumbing	62, 62A
Iris Valve	48, 48A
Control	48, 48A
J	
Jump Seat	12A
Headrest	12A
Safety Belt	12A
K	
Kit, Wheel & Brake Assy.	37
Knee	
Main Landing Gear	36
Nose Gear Shock Absorber Torque	41, 41A
L	
Landing Gear	
Actuator Hand Crank	39
Actuator Motor	39
Actuator Support	23
Door Hinge	40
Door, Main	40

PART NAME	FIGURE NO.
L	
Landing Gear (Contd)	
Door Retract Rod	38
Door Seal, Main	19, 19A
Indicator Light	63
Limit Switch	63
Main	36, 36A, 37
Nose	41, 41A
Piston & Fork, Nose	41
Retract Actuator	39
Retract Brace	38
Retract Idler Arm	42
Retract Mechanism, Main	38
Retract Mechanism, Nose	42
Retract Rod, Main	38
Retract Rod, Nose	42
Safety Switch	36, 36A, 37, 63
Safety System	71
Shimmy Dampener, Nose	43
Shock Absorber Barrel, Nose	41, 41A
Shock Absorber Control, Nose	41, 41A
Shock Absorber, Nose	41, 41A
Shock Absorber Torque Knee, Nose	41, 41A
Switch	58A, 61, 61A, 61B
Switch Actuator	38
Switch Light	61A, 61B
Up-Down Lights	58A
Up Lock Boot	38
Warning Horn	63
Warning Horn Flasher	63
Wheel, Nose	41B, 41C
Landing Light	63
Latch	
Baggage Door	9
Cabin Door Upper	10
Cabin Window	11
Cowling	51
Storm Window	11
Leading Edge	
Spar	19
Structure, Wing	19, 19A
Wing	18, 19
Lens, Overhead Light	47C, 47D
Levers	
Engine Control	58, 58A
Landing Gear Switch	71
Seat Adjust	12
Lid, Battery Box	8
Light	
Cowl Flap Indicator	61A
Flap Position	61B, 63
Flap Up-Down	58A
Flasher, Navigation	63
Instrument	61
Landing	63
Landing Gear Indicator	63
Landing Gear Switch	61A, 61B
Landing Gear Up-Down	58A
Map	60
Overhead Panel	47C, 47D

ALPHABETICAL INDEX

PART NAME	FIGURE NO.
L	
Light (Contd)	
Over Voltage Warning	61C
Pane, Wing Taxi	18
Post	61C
Ring, Nose	17
Rotating Beacon	63
Stall Warning Indicator	61A, 61B, 63
Tab Indicator	63
Tail	63
Taxi	41A, 63
Wing Tip	63
Lighter, Cigarette	63
Limit Switch	
Air Inlet	48
Cam, Flap	22A
Flap	63
Landing Gear	63
Lining, Brake	37D, 37E, 37F, 37G, 37H
Link	
Cabin Door	10
Flexible Steering	44
Nose Wheel Steering	44
Lock	
Baggage Door	9, 9A
Main Landing Gear Up	38
Nose Door Access	8, 8A
Loose Tools & Accessories	7
M	
Magneto, Engine	49, 49C
Main Landing Gear	36, 36A, 37
Safety System	71
Shock Absorber	36, 36A, 37
Truss	36
Main Wheel	37C
Manifold	
Pressure Gage	61, 61C
Pressure Indicator	61A, 61B
Vacuum	62, 62A
Map Box Door	15
Markings, Exterior	6
Mask, Oxygen	64, 64A
Mast, Pitot	62, 62A
Master Cylinder	
Brake	46, 47
Cover	46
Mechanism, Landing Gear Retract	38, 42
Meter	
Engine Hour	61C
Flight Hour	61C
Fuel Flow	61C
Mirror, Vanity Visor	14C
Mixture Control	54
Motor	
Flap	25, 25A
Landing Gear Actuator	39
Moulding, Windshield	11
Mount, Engine	49, 49C
N	
Nacelle	
Engine	18
Door, Engine	18
Fairing, Engine	18
Navigation Light Flasher	63
Nose Access Door	8, 8A
Hinge	8, 8A
Lock	8, 8A
Lock, Cam	8, 8A
Door Seal	8, 8A
Nose Cone	17
Nose Landing Gear	41, 41A
Door	45
Hinge	45
Steering Barrel	44
Steering Idler Collar	44
Steering Link	44
Steering Rod	44
Steering Yoke	44
Stop	44
Steering Torque Arm	44
Straightener Bolt	44
Straightener Ring	44
Taxi Light	41A
Nose Structure, Fuselage	8
Nozzle, Heater	48C
O	
Oil	
Cooler	49, 49C
Dipstick	49C
Drain Plug, Engine	49
Filler Tube	49C
Pressure Gage	61B, 61C
Separator	49, 49C
Sump Drain	49C
Temperature Bulb	49, 49C
Temperature Gage	61C, 61B
Overhead Panel	47C, 47D
Oxygen	
Bottle	64, 64A
Mask	64, 64A
Outlet	64, 64A
Pressure Indicator	64, 64A
Regulator	64, 64A
System	64, 64A
P	
Pane, Wing Taxi Light	18
Panel	
Baggage Door	9, 9A, 14, 14A, 14B, 14C
Circuit Breaker	61A, 61B
Door	14, 14A, 14B, 14C
Emergency Air Source	14C
Floating Instrument	61, 61A, 61B, 61C
Headliner	14, 14A, 14B, 14C

ALPHABETICAL INDEX

PART NAME	FIGURE NO.
P	
Panel (Contd)	
Ignition	63
Instrument	61, 61A, 61B, 61C
Overhead	47C, 47D
Partition	14, 14A, 14B, 14C
Rear Seat Cover	14, 14A, 14B, 14C
Soundproofing	14, 14A, 14B, 14C
Sub	61C
Switch	61C
Upholstery	14, 14A, 14B, 14C
Paralleling Relay, Alternator	49C
Parking Brake Valve and Control	46, 47A
Partition Panel	14, 14A, 14B, 14C
Pedals, Rudder	35
Pilots Seat	13C
Pin	
Baggage Door Hinge	9
Door Handle	10
Hinge Storm Window	11
Elevator Tab Hinge	29
Rudder Tab Hinge	30
Pipe, Intake Engine	49C
Piston	
Main Landing Gear	37
Nose Gear	41, 41A
Pitot	
Mast	62, 62A
Plumbing	62, 62A, 62B
Tube	62, 62A
Placard Diagram, Exterior	6
Plate	
Inside Door Handle	10
Wing Inspection	18
Plenum, Heater Air	48
Plumbing	
Anti-Icer	65, 66
Deicer	67
Fuel	57, 57A, 57B, 57C, 57D
Hydraulic Brake	46
Instrument	62, 62A, 62B
Oxygen	64
Pitot	62, 62A
Pressure	62B
Static	62, 62A
Points, Current & Voltage Regulator	49H
Post Light	61C
Power	
Box, External	63
Plant	49, 49A, 49C
Pressure Gage	
Deicer	61B
Fuel	61B
Manifold	61, 61A, 61B, 61C
Oil	61B, 61C
Primer	57
Probe Exhaust Temperature	49C
Propeller	49K
Anti-Icer	65, 66
Anti-Icer Blade	65, 66
P	
Propeller (Contd)	
Anti-Icer Hose	49C
Anti-Icer Shoe	65, 66
Governor	49E
Governor Control	54
Governor Unfeathering Accumulator	56
Spinner	49K
Pulley	
Aileron & Aileron Tab Control	31
Elevator & Elevator Tab	32
Rudder & Rudder Tab	33
Seat	13C
Pump	
Anti-Icer	48D, 65, 66
Deicer Vacuum	67, 68, 69, 70
Engine Fuel	49
Engine Vacuum	49A
Fuel Boost	57, 57A, 57D
Fuel Injector	49B
Heater Fuel	48D
Pressure	49C
Vacuum	49F
R	
Rate of Climb Indicator	61, 61A, 61B, 61C
Rear Seat	13, 13A, 13B, 13C
Receptacle, External Power	63
Reduction Gear, Starter	49I
Reflector, Overhead Light	47C, 47D
Regulator	
Oxygen	64, 64A
Valve, Vacuum	62A
Voltage	49H, 63
Relay	
Alternator Paralleling	49C
Battery Master	63
Dynamic Breaking	63
Starter	49C
Voltage	63
Relief Valve, Vacuum	49G
Reservoir, Brake Fluid	46
Restrictor, Manifold Pressure	49C
Retract	
Actuator, Main Landing Gear	39
Assist Step	16
Brace, Landing Gear	38
Idler Arm, Nose Gear	42
Mechanism, Main Gear	38
Mechanism, Nose Gear	42
Rod, Main Landing Gear	38
Rod, Nose Landing Gear	42
Rib, Wing	19
Rod	
Aileron Control	31
Cowling Door	51
Landing Gear Retract	38
Nose Landing Gear Retract	42

ALPHABETICAL INDEX

PART NAME	FIGURE NO.
R	
Rod (Contd)	
Nose Landing Gear Steering	44
Roller	
Flap	22, 22A
Flap Hinge	18
Rotating Beacon	63
Rudder	30
Balance Weight	30
Bellcrank	34
Flight Controls	33
Hinge	28, 34
Hinge Bearing	28
Hinge Bushing	28
Horn	30
Pedals	35
Pedal Boot	14, 14A, 14B, 14C
Skin	3, 4, 4A
Tab Flight Controls	33
Tab Indicator	58, 58A
Tab Skin	3, 4, 4A
Trim Tab	30
Trim Tab Actuator	28
Trim Tab Hinge Pin	30
S	
Safety Belt, Seat	12, 12A, 12C, 13, 13C
Safety System, Landing Gear	71
Scoop	
Fresh Air	47C
Induction Air	53
Screen	
Air Inlet	48
Heater Air Inlet	48A
Seal	
Baffle	50
Baggage Door	9
Brake	37E, 37F
Cabin Door	10
Cabin Window	11
Cowling	51
Main Landing Gear Door	19, 19A
Main Wheel	37B, 37C
Nose Access Door	8, 8A
Stabilizer	26
Storm Window	11
Seat	
Front	12, 12C, 13C, 13D
Fifth	12B
Jump	12A
Rear	13, 13A, 13B, 13C, 13E
Track	13B, 13C, 13D, 13E
Selector Valve	
Fuel	57, 57B, 57D, 57F, 57G
Vacuum	62
Separator Oil	49, 49C
Shaft	
Door Handle	10
Shaft (Contd)	
Engine Control	58
Idler Arm	44
Nose Wheel Steering	44
Tachometer Flexible Drive	62, 62A
Shimmy Dampener, Nose Gear	43
Shock Absorber	
Barrel, Nose Gear	41, 41A
Brace, Nose Gear	41, 41A
Control, Nose Gear	41, 41A
Knee, Nose Landing Gear	41, 41A
Main Landing Gear	36, 36A, 37
Nose Gear	41, 41A
Strut	41A
Shoe	
Anti-Icer	49K
Propeller Anti-Icer	65, 66
Shroud	
Fuel Injector	49B
Heater Exhaust	48, 48A
Shuttle Valve	67, 68, 69, 70
Skin	
Aileron	3, 4, 4A
Diagram, Fuselage	3, 4, 4A
Diagram, Wing	2
Dorsal Fin	3, 4, 4A
Elevator	3, 4, 4A
Elevator Horn	29
Elevator Tab	3, 4, 4A
Flap	3, 4, 4A
Fuselage	3, 4, 4A
Horizontal Stabilizer	3, 4, 4A
Rudder	3, 4, 4A
Rudder Tab	3, 4, 4A
Vertical Stabilizer	3, 4, 4A
Slide, Rear Seat	13
Socket, Main Landing Gear Axle	36A, 37
Solenoid, Starter	49
Soundproofing Panel	14, 14A, 14B, 14C
Spar	
Leading Edge	19
Wing Front	18
Wing Main	19
Spark Plug	49, 49A, 49C
Speaker	
Grill, Overhead	47C
Overhead	47C, 47D, 63
Spider, Propeller Hub	49K
Spinner, Propeller	49K
Spring	
Cabin Door	10
Elevator Down	34
Propeller Feathering	49K
Sprocket, Control Column	59
Stabilizer	
Horizontal	27
Seal	26
Skin, Horizontal	3, 4, 4A
Skin, Vertical	3, 4, 4A

ALPHABETICAL INDEX

PART NAME	FIGURE NO.
S	
Stabilizer (Contd)	
Vertical	28
Stack	
Engine Exhaust	49
Stall Warning	
Indicator Light	63
Light	61A, 61B
Strip	67, 68, 69, 70
Switch, Deicer	67, 68, 69, 70
Unit	63, 67, 68, 69, 70
Starter	49I
Engine	49I
Relay	49C
Ring Gear	49C
Solenoid	49
Switch	63
Vibrator	63
Static	
Discharge	20, 26, 29
Plumbing	62, 62A, 62B
Station Diagram	
Fuselage	1
Horizontal Stabilizer	1
Vertical Stabilizer	1
Wing	1
Steering	
Barrel, Nose Wheel	44
Idler Collar, Nose Gear	44
Link, Flexible	44
Link, Nose Wheel	44
Rod End	44
Rod Idler Arm	44
Rod, Nose Gear	44
Shaft, Nose Wheel	44
Torque Arm, Nose	44
Yoke, Nose Gear	44
Step, Assist	16, 16A
Stop	
Baggage Door	9, 9A
Cowl Flap	52
Nose Access Door	8, 8A
Nose Wheel	44
Propeller Feathering	49K
Propeller High Pitch	49K
Storm Window	11
Storm Window	11
Straightener	
Boot, Nose Wheel	44
Ring, Nose Wheel	44
Strainer, Fuel	57, 57A, 57D, 57H
Strap, Baggage Compartment	14, 14A, 14B, 14C
Stringer, Wing	19, 19A
Structure	
Cabin	8
Fuselage	8
Wing	18, 19, 19A
Wing Leading Edge	19, 19A
Wing Tip	19, 19A
Wing Trailing Edge	19, 19A
S	
Strut, Shock Absorber	41A
Sun Visor	14, 14A, 14B, 14C
Sub Panel	61C
Suction Gage	61, 61A, 61B, 61C
Support	
Assist Step	16
Cabin Heater	48A
Control	58
Landing Gear Actuator	23
Switch	
Actuator, Landing Gear	38
Alternator	63
Battery Ignition	63
Deicer Stall Warning	67
Flap	58, 58A
Flap Limit	63
Generator	63
Heater, Safety	48, 48A
Landing Gear	58A, 61, 61A, 61B
Landing Gear Limit	63
Landing Gear Safety	36, 63, 71
Light, Landing Gear	61A, 61B
Overhead Light	47C, 47D
Overhead Speaker	63
Panel	61C
Starter	63
Throttle Warning	58, 58A, 63
T	
Tab	
Actuator, Aileron	31
Aileron	20
Control, Aileron Trim	60
Elevator Trim	29
Indicator, Aileron	58, 58A
Indicator, Elevator	58, 58A
Indicator Light	63
Indicator, Rudder	58, 58A
Rudder Trim	30
Tachometer	
Engine	61, 61A, 61B, 61C
Flexible Drive Shaft	62, 62A
Tail	
Cone, Fuselage	17
Light	63
Tank	
Anti-Icer Fluid	65, 66
Fuel	57, 57A, 57D
Taxi Light	63
Nose Gear	41A
Pane, Wing	18
Temperature	
Gage, Oil	61B
Indicator, Carburetor Air	61, 61A
Indicator, Cylinder Head	61B, 61C
Indicator, Oil	61C
Indicator, Outside Air	11

ALPHABETICAL INDEX

PART NAME	FIGURE NO.
T	
Temperature (Contd)	
Probe, Exhaust	49C
Thermocouple, Engine Cylinder	49
Thermostat, Cabin Heater	48, 48A
Throttle	
Control	54
Warning Switch	58, 58A, 63
Tip	
Light, Wing	63
Structure, Wing	19, 19A
Vertical Stabilizer	28
Wing	18, 19
Tire	
Main Landing Gear	36, 36A, 37
Nose Gear	41, 41A
Tools, Loose	7
Track, Seat	12C, 13B, 13C
Trailing Edge Structure, Wing	19, 19A
Transformer, Overhead Speaker	47C
Transmitter	
Anti-Icer Fluid	65, 66
Fuel	57, 57A, 57D
Tray, Ash	14, 14A, 14B, 14C
Trim	
Instrument Panel	15
Strip Headliner	14, 14A, 14B, 14C
Strip, Side Panel	14, 14A, 14B, 14C
Tab Control, Aileron	60
Truss, Main Landing Gear	36, 36A, 37
Tube	
Engine Exhaust	49
Generator Blast	49C, 50
Main Gear	36
Nose Gear	41, 41A
Pitot	62, 62A
Turn & Bank Indicator	61, 61A, 61B, 61C
U	
Upholstery	14, 14A, 14B, 14C, 14D
Fifth Seat	12B
Utility Baggage Door	9A
V	
Vacuum	
Manifold	62, 62A
Pump	49F
Pump, Deicer	67, 68, 69, 70
Pump, Engine	49A
Regulator Valve	62A
Relief Valve	49G
Selector Valve	62
Valve	
Brake Bleeder	37D, 37E, 37F
Cabin Exhaust	47D
Carburetor Air	53, 53A
Defroster	48
Deicer Distributor	67, 68, 69, 70
Engine Oil Drain	49
Fresh Air	47C, 47D
Fuel Check	57, 57A, 57D
Fuel Drain	57, 57A, 57C, 57D
Fuel Selector	57, 57B, 57D, 57F, 57G
Heater Fuel Shutoff	48, 48A
Iris	48A
Oxygen Filler	64
Parking Brake	46, 47A
Shuttle	67, 68, 69, 70
Unfeathering Accumulator	56
Vacuum Regulator	62A
Vacuum Relief	49G
Vacuum Selector	62
Vent & Heat, Cabin	48
Vertical Stabilizer	28
Skin	3, 4, 4A
Station Diagram	1
Tip	28
Vibrator, Starter	63
Visor, Sun	14, 14A, 14B, 14C
Voltage	
Regulator	49H, 63
Relay	63
W	
Walkway, Wing	19, 19A
Warning	
Horn Flasher, Landing Gear	63
Horn, Landing Gear	63
Indicator Light, Stall	63
Light, Over Voltage	61C
Light, Stall	61A, 61B
Switch, Deicer Stall	67
Switch, Throttle	58, 58A, 63
Unit, Stall	63
Wedjit, Jump Seat	12A
Weight	
Elevator Balance	29
Propeller Balance	49K
Rudder Balance	30
Wheel	
Control	60
Elevator Tab	58, 58A
Main Landing Gear	37B, 37C, 37I
Nose Landing Gear	41A, 41B, 41C
Rudder Tab	58, 58A
Wick, Static	26
Window	
Aft	11A
Cabin	11
Curtain	14A, 14B, 14C
Glass, Aft	11A
Storm	11
Windshield	11, 11B, 11C

ALPHABETICAL INDEX

PART NAME	FIGURE NO.
W	
Windshield (Contd)	
Defrost Duct	48
Moulding	11, 11B, 11C
Wing	18, 19
Former	19
Front Spar	18
Hinge, Main Section	19
Inspection Plate	18
Leading Edge	18, 19
Main Section Door	18
Main Spar	19
Rib	19
Skin Diagram	2

PART NAME	FIGURE NO.
W	
Wing (Contd)	
Station Diagram	1
Stringer	19
Structure	18, 19, 19A
Taxi Light Pane	18
Tip	18, 19
Tip Structure	19, 19A
Tip Light	63
Y	
Yoke, Nose Gear Steering	44

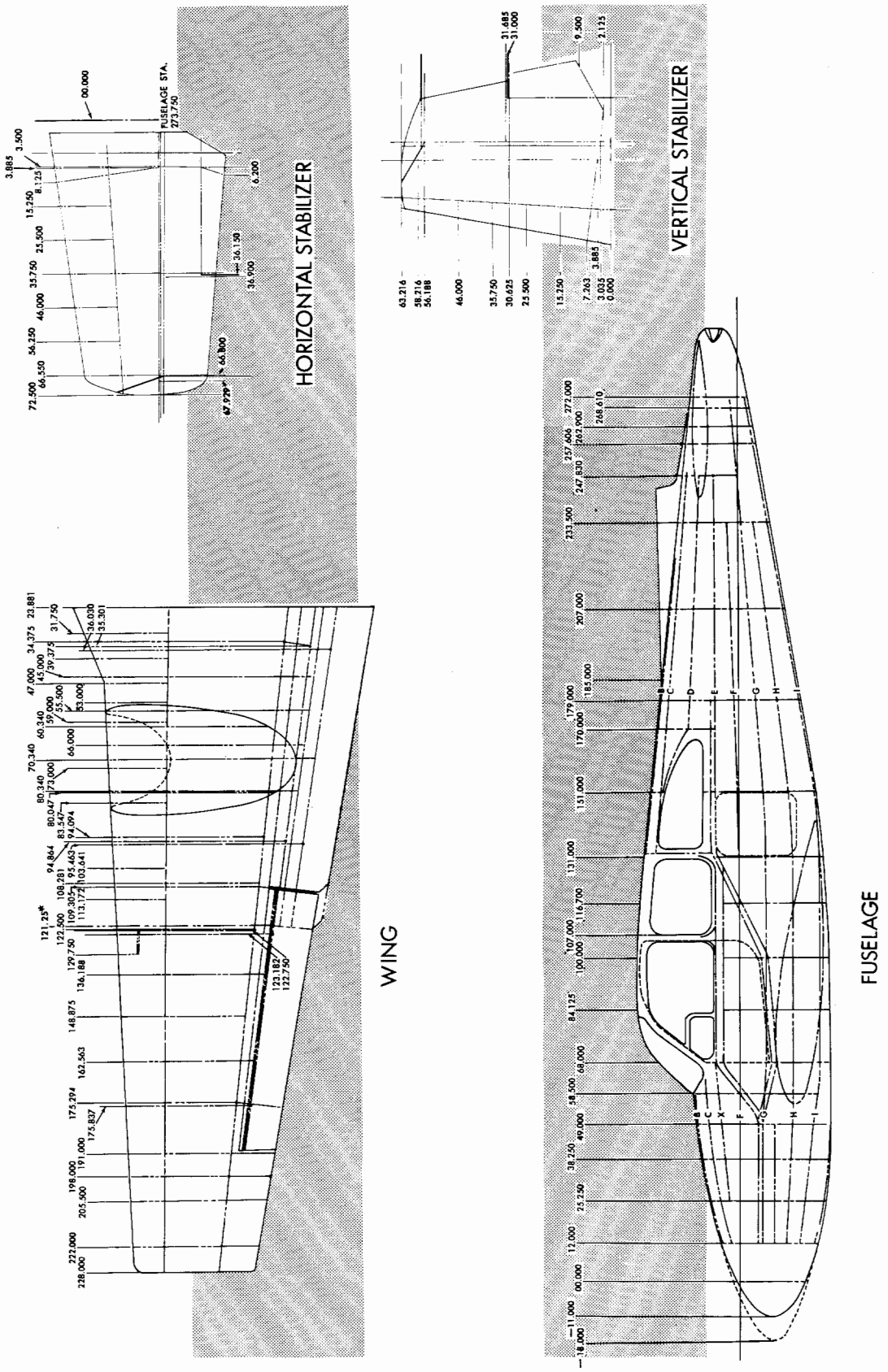

Figure 1. Station Diagram

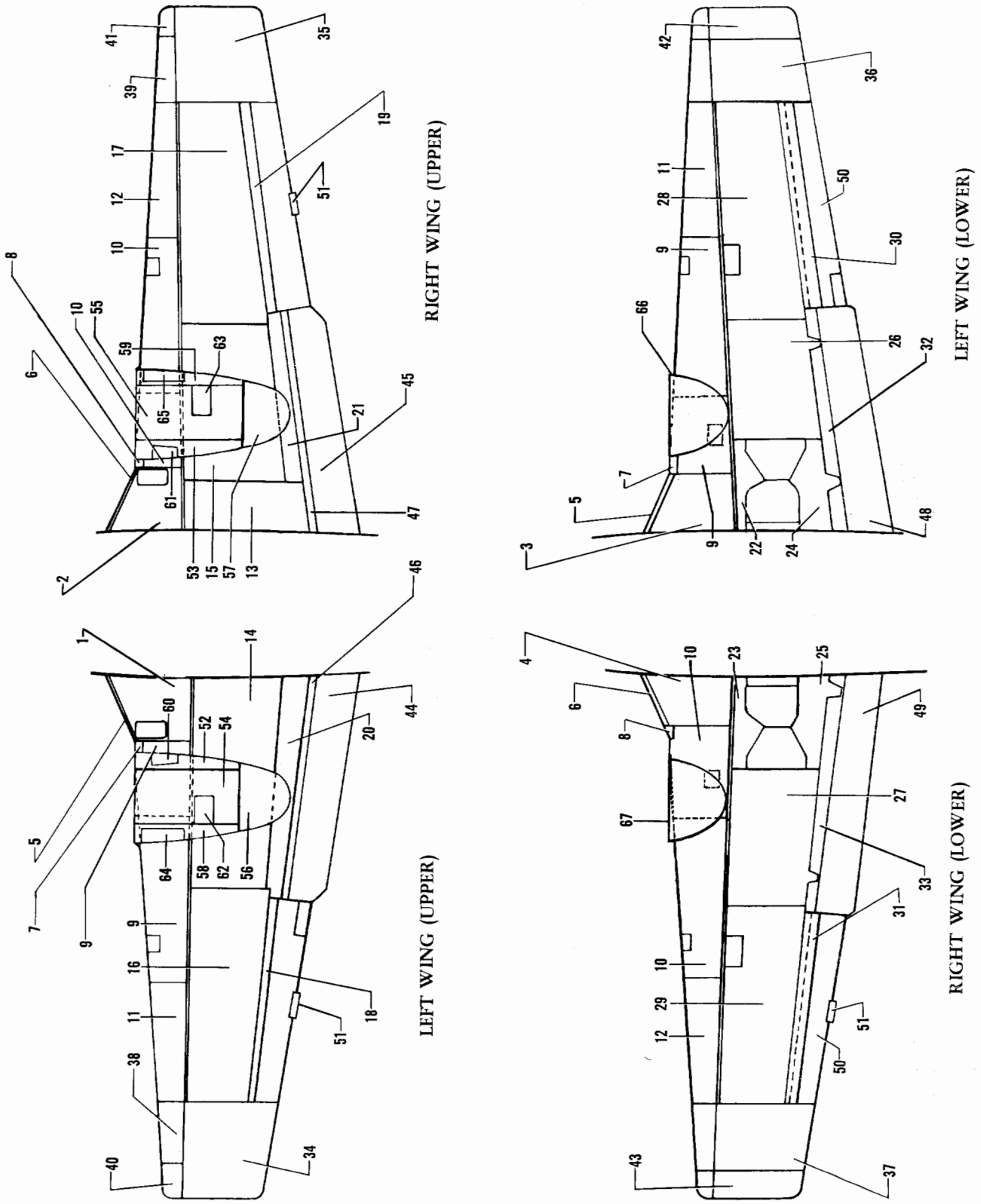

Figure 2. Wing Skin Diagram

FIG. & INDEX NO.	PART NO.	DESCRIPTION 1 2 3 4 5 6 7	UNITS PER ASSY	USABLE ON CODE
2 - 1	95-110015-5	SKIN,LEADING EDGE TOP INBD LH	1	1
	95-110015-165	SKIN,LEADING EDGE TOP INBD LH	1	2
- 2	95-110015-6	SKIN,LEADING EDGE TOP INBD RH	1	1
	95-110015-166	SKIN,LEADING EDGE TOP INBD RH	1	2
- 3	95-110015-103	SKIN,LEADING EDGE BOTTOM INBD LH	1	1
	95-110015-171	SKIN,LEADING EDGE BOTTOM INBD LH	1	2
- 4	95-110015-104	SKIN,LEADING EDGE BOTTOM INBD RH	1	1
	95-110015-172	SKIN,LEADING EDGE BOTTOM INBD RH	1	2
- 5	95-110015-169	SKIN,LEADING EDGE LH	1	4
	95-110015-101	SKIN,LEADING EDGE LH	1	3
- 6	95-110015-170	SKIN,LEADING EDGE RH	1	4
	95-110015-102	SKIN,LEADING EDGE RH	1	3
- 7	95-110015-175	SKIN,LEADING EDGE LH	1	4
	95-110015-107	SKIN,LEADING EDGE LH	1	3
- 8	95-110015-176	SKIN,LEADING EDGE RH	1	4
	95-110015-108	SKIN,LEADING EDGE RH	1	3
- 9	35-115431-99	SKIN,LEADING EDGE LH STA 47 TO STA 122	1	2
	95-110015-33	SKIN,LEADING EDGE TOP LH STA 47 TO STA 73	1	5
	95-110015-177	SKIN,LEADING EDGE TOP LH STA 47 TO STA 73	1	4
	95-110015-45	SKIN,LEADING EDGE LH STA 73 TO STA 122	1	1
- 10	35-115431-100	SKIN,LEADING EDGE RH STA 47 TO 122	1	2
	95-110015-34	SKIN,LEADING EDGE TOP RH STA 47 TO STA 73	1	5
	95-110015-178	SKIN,LEADING EDGE TOP RH STA 47 TO STA 73	1	4
	95-110015-46	SKIN,LEADING EDGE RH STA 73 TO 122	1	1
- 11	35-115431-107	SKIN,LEADING EDGE OUTBD LH	1	2
	95-110015-87	SKIN,LEADING EDGE OUTBD LH	1	1
- 12	35-115431-108	SKIN,LEADING EDGE OUTBD RH	1	2
	35-115211-9	SKIN,LEADING EDGE OUTBD RH	1	1
- 13	95-110014-260	SKIN,MAIN SECTION WALK WAY /RH ONLY/	1	
- 14	95-110014-169	SKIN,MAIN SECTION TOP INBD LH	1	
- 15	95-110014-172	SKIN,MAIN SECTION TOP INBD RH	1	
- 16	95-110014-161	SKIN,MAIN SECTION TOP OUTBD LH	1	
- 17	95-110014-162	SKIN,MAIN SECTION TOP OUTBD RH	1	
- 18	95-110014-395	SKIN,TRAILING EDGE TOP OUTBD LH	1	2
	95-110014-199	SKIN,TRAILING EDGE TOP OUTBD LH	1	1
- 19	95-110014-396	SKIN,TRAILING EDGE TOP OUTBD RH	1	2
	95-110014-200	SKIN,TRAILING EDGE TOP OUTBD RH	1	1
- 20	95-110014-413	SKIN,TRAILING EDGE TOP INBD LH	1	2
	95-110014-271	SKIN,TRAILING EDGE TOP INBD LH	1	1
- 21	95-110014-416	SKIN,TRAILING EDGE TOP INBD RH	1	2
	95-110014-274	SKIN,TRAILING EDGE TOP INBD RH	1	1
- 22	95-110014-203	SKIN,MAIN SECTION LOWER INBD FRONT LH	1	
- 23	95-110014-204	SKIN,MAIN SECTION LOWER INBD FRONT RH	1	
- 24	95-110014-207	SKIN,MAIN SECTION LOWER INBD REAR LH	1	
- 25	95-110014-208	SKIN,MAIN SECTION LOWER INBD REAR RH	1	
- 26	95-110014-205	SKIN,MAIN SECTION LOWER LH	1	
- 27	95-110014-206	SKIN,MAIN SECTION LOWER RH	1	
- 28	95-110014-209	SKIN,MAIN SECTION LOWER OUTBD LH	1	
- 29	95-110014-210	SKIN,MAIN SECTION LOWER OUTBD RH	1	
- 30	95-110014-393	SKIN,TRAILING EDGE LOWER OUTBD LH	1	2
	95-110014-211	SKIN,TRAILING EDGE LOWER OUTBD LH	1	1
- 31	95-110014-394	SKIN,TRAILING EDGE LOWER OUTBD RH	1	2
	95-110014-212	SKIN,TRAILING EDGE LOWER OUTBD RH	1	1
- 32	95-110014-399	SKIN,TRAILING EDGE LOWER INBD LH	1	2
	95-110014-323	SKIN,TRAILING EDGE LOWER INBD LH	1	1
- 33	95-110014-400	SKIN,TRAILING EDGE LOWER INBD RH	1	2
	95-110014-324	SKIN,TRAILING EDGE LOWER INBD RH	1	1
- 34	95-170000-3	SKIN,WING TIP UPPER LH	1	
- 35	95-170000-4	SKIN,WING TIP UPPER RH	1	
- 36	95-170000-5	SKIN,WING TIP LOWER INBD LH	1	
- 37	95-170000-6	SKIN,WING TIP LOWER INBD RH	1	
- 38	95-170000-7	SKIN,WING TIP LEADING EDGE LH	1	
- 39	95-170000-8	SKIN,WING TIP LEADING EDGE RH	1	
- 40	95-170000-9	SKIN,WING TIP LEADING EDGE LH	1	
- 41	95-170000-10	SKIN,WING TIP LEADING EDGE RH	1	
- 42	95-170000-11	SKIN,WING TIP LOWER OUTBD LH	1	
- 43	95-170000-12	SKIN,WING TIP LOWER OUTBD RH	1	

FIG. & INDEX NO.	PART NO.	DESCRIPTION 1 2 3 4 5 6 7	UNITS PER ASSY	USABLE ON CODE
2 - 44	95-160001-5	SKIN,FLAP UPPER LH	1	11
	95-160000-39	SKIN,FLAP UPPER INBD LH	1	10
	95-160000-33	SKIN,FLAP UPPER OUTBD LH	1	10
- 45	95-160001-6	SKIN,FLAP UPPER RH	1	11
	95-160000-40	SKIN,FLAP UPPER INBD RH	1	10
	95-160000-34	SKIN,FLAP UPPER OUTBD RH	1	10
- 46	95-160001-9	SKIN,FLAP LEADING EDGE LH	1	6
	95-160000-27	SKIN,FLAP LEADING EDGE LH	1	14
- 47	95-160001-10	SKIN,FLAP LEADING EDGE RH	1	6
	95-160000-28	SKIN,FLAP LEADING EDGE RH	1	14
- 48	95-160001-3	SKIN,FLAP LOWER LH	1	6
	95-160000-19	SKIN,FLAP LOWER LH	1	14
	35-165051-8	SKIN,FLAP LOWER LH	1	5
- 49	95-160001-4	SKIN,FLAP LOWER RH	1	6
	95-160000-20	SKIN,FLAP LOWER RH	1	14
	35-165051-9	SKIN,FLAP LOWER RH	1	5
- 50	95-130000-3	SKIN,AILERON LH & RH	2	8
	45-135031-1	SKIN,AILERON LH	1	12
	45-135031-75	SKIN,AILERON LH	1	13
	35-135025-6	SKIN,AILERON RH	1	12
	33-130000-3	SKIN,AILERON RH	1	13
- 51	95-130000-7	TAB,FIXED	2	8
	35-135025-20	TAB,FIXED	2	14
- 52	95-980001-63	SKIN,NACELLE INBD LH	1	
- 53	95-980001-64	SKIN,NACELLE INBD RH	1	
- 54	95-980001-61	SKIN,NACELLE TOP FWD LH	1	
- 55	95-980001-62	SKIN,NACELLE TOP FWD RH	1	
- 56	95-980001-81	SKIN,NACELLE TOP AFT LH	1	
- 57	95-980001-82	SKIN,NACELLE TOP AFT RH	1	
- 58	95-980001-83	SKIN,NACELLE OUTBD LH	1	
- 59	95-980001-84	SKIN,NACELLE OUTBD RH	1	
- 60	95-980001-193	DOOR,NACELLE INBD LH	1	
- 61	95-980001-194	DOOR,NACELLE INBD RH	1	
- 62	95-980001-185	DOOR,NACELLE TOP LH	1	
- 63	95-980001-186	DOOR,NACELLE TOP RH	1	
- 64	95-980001-189	DOOR,NACELLE OUTBD LH	1	
- 65	95-980001-190	DOOR,NACELLE OUTBD RH	1	
- 66	95-980001-89	SKIN,NACELLE LOWER LH	1	
- 67	95-980001-90	SKIN,NACELLE LOWER RH	1	

CODE	EFFECTIVITY	CODE	EFFECTIVITY
1	TD-1 THRU TD-525	2	TD-526 AND AFTER
3	TD-1 THRU TD-302, TD-526 AND AFTER	4	TD-303 THRU TD-525
5	TD-1 THRU TD-302	6	TD-534 AND AFTER
7	TD-303 THRU TD-452	8	TD-453 AND AFTER
9	TD-303 AND AFTER	10	TD-453 THRU TD-512
11	TD-513 AND AFTER	12	TD-1 THRU TD-426
13	TD-427 THRU TD-452	14	TD-302 THRU TD-533

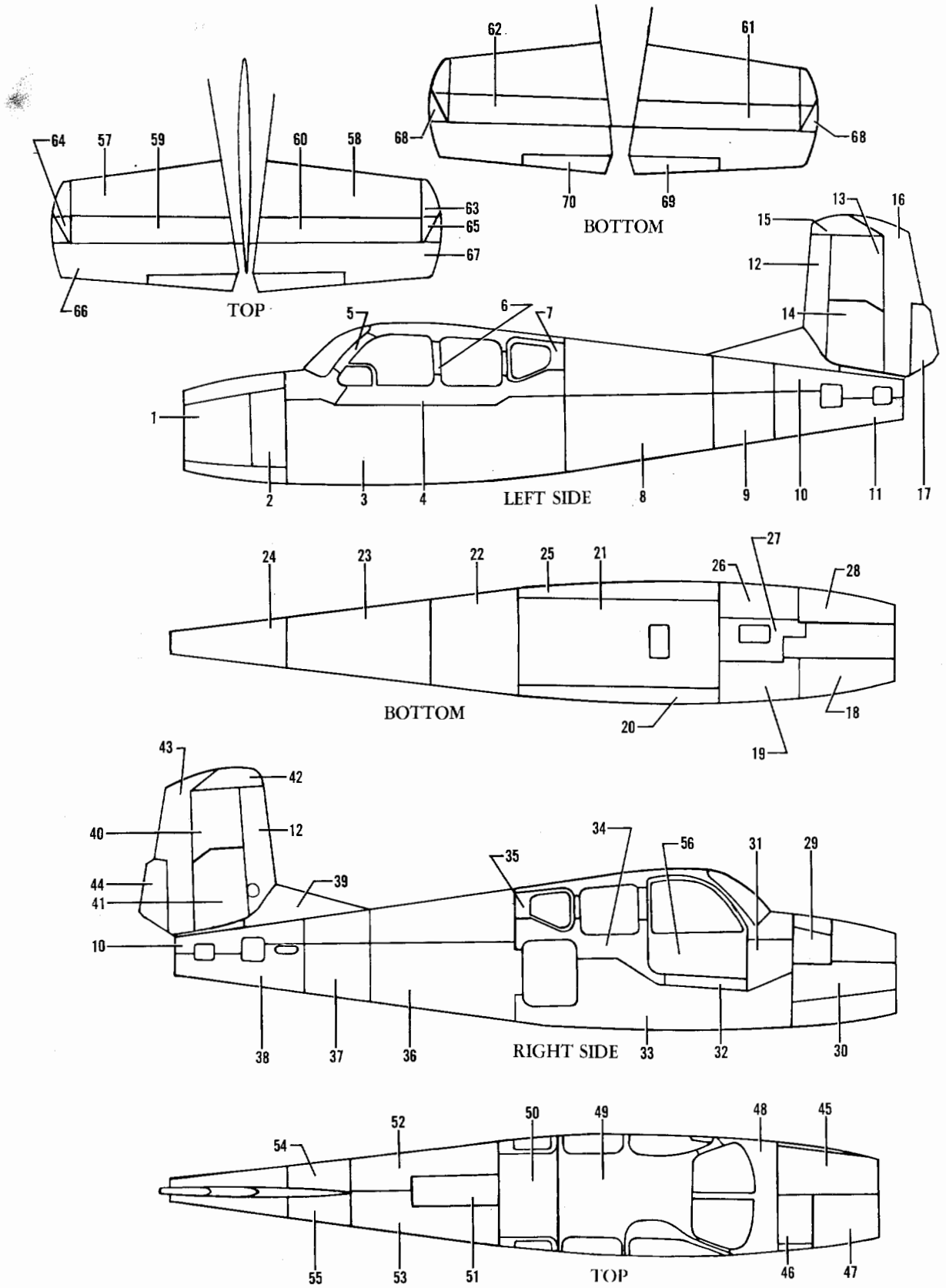

Figure 3. Fuselage Skin Diagram (TD-1 thru TD-302)

FIG. & INDEX NO.	PART NO.	DESCRIPTION 1 2 3 4 5 6 7	UNITS PER ASSY	USABLE ON CODE
3 - 1	¤95-410005-53	SKIN,FUSELAGE NOSE LH	1	1
- 2	¤95-410005-187	SKIN,FUSELAGE NOSE LH	1	1
- 3	¤95-420011-65	SKIN,FUSELAGE LH.	1	1
- 4	95-420011-143	SKIN,CANOPY LH.	1	1
- 5	¤35-410452-73	SKIN,CANOPY LH.	1	1
- 6	35-410452-75	SKIN,CANOPY LH.	1	1
- 7	¤35-410000-94	SKIN,CANOPY AFT LH.	1	1
- 8	95-430005-57	SKIN,FUSELAGE AFT LH.	1	1
- 9	95-430005-53	SKIN,FUSELAGE AFT LH.	1	1
- 10	95-440005-5	SKIN,FUSELAGE AFT LH.	1	1
- 11	95-440005-11	SKIN,FUSELAGE AFT LH.	1	1
- 12	95-640005-11	SKIN,VERTICAL STABILIZER LEADING EDGE	1	1
- 13	95-640005-15	SKIN,VERTICAL STABILIZER LH	1	1
- 14	95-640005-27	SKIN,VERTICAL STABILIZER LH	1	1
- 15	45-640005-51	SKIN,VERTICAL STABILIZER TIP LH	1	1
- 16	¤45-630005-112	SKIN,RUDDER LH.	1	1
- 17	95-630005-3	SKIN,RUDDER TAB LH.	1	1
- 18	¤95-410005-51	SKIN,FUSELAGE NOSE LH	1	1
- 19	¤95-420011-55	SKIN,FUSELAGE LH.	1	1
- 20	¤95-420011-83	SKIN,FUSELAGE LH.	1	1
- 21	¤95-420011-67	SKIN,FUSELAGE BOTTOM.	1	1
- 22	95-430005-55	SKIN,FUSELAGE AFT BOTTOM.	1	1
- 23	95-430005-61	SKIN,FUSELAGE AFT BOTTOM.	1	1
- 24	45-410204-5	SKIN,FUSELAGE AFT BOTTOM.	1	1
- 25	¤95-420011-141	SKIN,FUSELAGE RH.	1	1
- 26	¤95-420011-57	SKIN,FUSELAGE RH.	1	1
- 27	¤95-420011-113	SKIN,FUSELAGE BOTTOM.	1	1
- 28	¤95-410005-52	SKIN,FUSELAGE BOTTOM RH	1	1
- 29	¤95-410005-59	SKIN,FUSELAGE NOSE RH	1	1
- 30	95-410005-61	SKIN,FUSELAGE NOSE RH	1	1
- 31	95-420011-45	SKIN,FUSELAGE RH.	1	1
- 32	¤35-410452-3	SKIN,FUSELAGE RH.	1	1
- 33	95-420011-79	SKIN,FUSELAGE RH.	1	1
- 34	¤35-410452-9	SKIN,FUSELAGE RH.	1	1
- 35	¤35-410000-95	SKIN,FUSELAGE RH.	1	1
- 36	95-430005-58	SKIN,FUSELAGE AFT RH.	1	1
- 37	¤95-430005-54	SKIN,FUSELAGE AFT RH.	1	1
- 38	95-440005-12	SKIN,FUSELAGE AFT RH.	1	1
- 39	95-440011-1	SKIN,DORSAL FIN	1	1
- 40	95-640005-16	SKIN,VERTICAL STABILIZER RH	1	1
- 41	95-640005-30	SKIN,VERTICAL STABILIZER RH	1	1
- 42	45-640005-49	SKIN,VERTICAL STABILIZER TIP RH	1	1
- 43	¤45-630005-113	SKIN,RUDDER RH.	1	1
- 44	95-630005-4	SKIN,RUDDER TAB RH.	1	1
- 45	¤95-410005-55	SKIN,FUSELAGE NOSE UPPER.	1	1
- 46	¤95-410005-57	SKIN,FUSELAGE NOSE UPPER.	1	1
- 47	¤95-410029-19	SKIN,FUSELAGE NOSE UPPER.	1	1
- 48	¤95-420011-85	SKIN,FUSELAGE NOSE UPPER.	1	1
- 49	¤35-410452-43	SKIN,FUSELAGE UPPER	1	1
- 50	¤35-410452-45	SKIN,FUSELAGE UPPER	1	1
- 51	95-430005-81	SKIN,FUSELAGE UPPER	1	1
- 52	¤95-430005-51	SKIN,FUSELAGE UPPER LH.	1	1
- 53	95-430005-52	SKIN,FUSELAGE UPPER RH.	1	1
- 54	95-430005-49	SKIN,FUSELAGE UPPER LH.	1	1
- 55	95-430005-50	SKIN,FUSELAGE UPPER RH.	1	1
- 56	35-400010-56	SKIN,CABIN DOOR	1	1
- 57	95-620010-51	SKIN,HORIZONTAL STABILIZER LEADING EDGE LH.	1	1
- 58	95-620010-52	SKIN,HORIZONTAL STABILIZER LEADING EDGE RH.	1	1
- 59	95-620010-47	SKIN,HORIZONTAL STABILIZER UPPER LH	1	1
- 60	95-620010-48	SKIN,HORIZONTAL STABILIZER UPPER RH	1	1
- 61	95-620010-49	SKIN,HORIZONTAL STABILIZER LOWER LH	1	1
- 62	95-620010-50	SKIN,HORIZONTAL STABILIZER LOWER RH	1	1
- 63	¤95-620010-19	SKIN,HORIZONTAL STABILIZER TIP.	2	1
- 64	95-620010-21	SKIN,HORIZONTAL STABILIZER.	1	1
- 65	95-620010-22	SKIN,HORIZONTAL STABILIZER.	1	1
- 66	45-610005-4	SKIN,ELEVATOR LH.	1	1
- 67	¤45-610005-5	SKIN,ELEVATOR RH.	1	1

FIG. & INDEX NO.	PART NO.	DESCRIPTION 1 2 3 4 5 6 7	UNITS PER ASSY	USABLE ON CODE
3 - 68	¤45-660012-1	SKIN,ELEVATOR HORN.	2	1
- 69	45-610005-43	SKIN,ELEVATOR TAB LH.	1	1
- 70	45-610005-42	SKIN,ELEVATOR TAB RH.	1	1

CODE EFFECTIVITY

1 TD-1 THRU TD-302

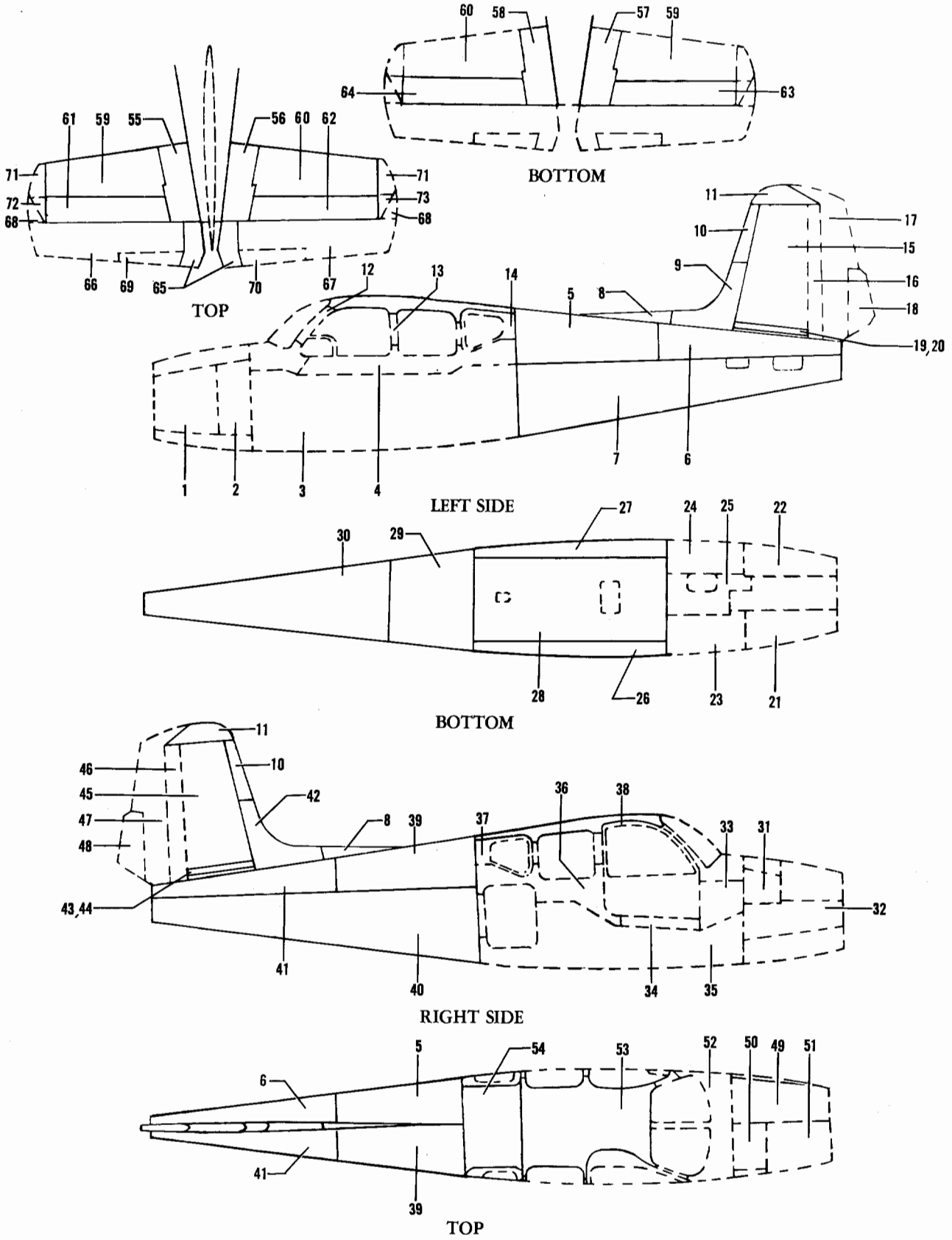

Figure 4. Fuselage Skin Diagram (TD-303 thru TD-452)

FIG. & INDEX NO.	PART NO.	DESCRIPTION 1 2 3 4 5 6 7	UNITS PER ASSY	USABLE ON CODE
4 - 1	95-410005-53	SKIN,FUSELAGE FWD LH.	1	1
- 2	95-410005-187	SKIN,FUSELAGE FWD LH.	1	1
- 3	95-420011-65	SKIN,FUSELAGE LH.	1	1
- 4	95-420011-143	SKIN,FUSELAGE LH.	1	1
- 5	95-440006-63	SKIN,FUSELAGE AFT LH.	1	1
- 6	95-440006-65	SKIN,FUSELAGE AFT LH.	1	1
- 7	95-440006-67	SKIN,FUSELAGE AFT LH.	1	1
- 8	95-440015-3	SKIN,DORSAL FAIRING	1	1
- 9	95-440015-11	SKIN,DORSAL FAIRING LH.	1	1
- 10	95-640006-1	SKIN,VERTICAL STABILIZER LEADING EDGE	1	1
- 11	95-640006-40	SKIN,VERTICAL STABILIZER TIP.	1	1
- 12	35-410452-73	SKIN,FUSELAGE CANOPY LH	1	1
- 13	35-410452-75	SKIN,FUSELAGE CANOPY LH	1	1
- 14	35-410000-94	SKIN,FUSELAGE CANOPY LH	1	1
- 15	95-640005-15	SKIN,VERTICAL STABILIZER LH	1	1
- 16	95-640005-27	SKIN,VERTICAL STABILIZER LH	1	1
- 17	45-630005-112	SKIN,RUDDER LH.	1	1
- 18	95-630005-3	SKIN,RUDDER TAB LH.	1	1
- 19	95-440015-13	SKIN,DORSAL FAIRING LH.	1	1
- 20	95-440015-5	SEAL,DORSAL FAIRING LH.	1	1
- 21	95-410005-51	SKIN,FUSELAGE BOTTOM LH	1	1
- 22	95-410005-52	SKIN,FUSELAGE BOTTOM RH	1	1
- 23	95-420011-55	SKIN,FUSELAGE BOTTOM LH	1	1
- 24	95-420011-57	SKIN,FUSELAGE BOTTOM RH	1	1
- 25	95-420011-113	SKIN,FUSELAGE BOTTOM.	1	1
- 26	95-420015-41	SKIN,FUSELAGE BOTTOM LH	1	1
- 27	95-420015-53	SKIN,FUSELAGE BOTTOM RH	1	1
- 28	95-420015-55	SKIN,FUSELAGE BOTTOM CENTER	1	1
- 29	95-440006-69	SKIN,FUSELAGE BOTTOM AFT.	1	1
- 30	95-440006-71	SKIN,FUSELAGE BOTTOM AFT.	1	1
- 31	95-410005-59	SKIN,FUSELAGE FWD RH.	1	1
- 32	95-410005-61	SKIN,FUSELAGE FWD RH.	1	1
- 33	95-420011-45	SKIN,FUSELAGE MAIN RH	1	1
- 34	35-410452-3	SKIN,FUSELAGE MAIN RH	1	1
- 35	95-420011-79	SKIN,FUSELAGE MAIN RH	1	1
- 36	35-410452-9	SKIN,FUSELAGE MAIN RH	1	1
- 37	35-410000-94	SKIN,FUSELAGE MAIN RH	1	1
- 38	35-400010-56	SKIN,DOOR	1	1
- 39	95-440006-64	SKIN,FUSELAGE AFT RH.	1	1
- 40	95-440006-68	SKIN,FUSELAGE AFT RH.	1	1
- 41	95-440006-66	SKIN,FUSELAGE AFT RH.	1	1
- 42	95-440015-12	SKIN,DORSAL FAIRING RH.	1	1
- 43	95-440015-14	SKIN,DORSAL FAIRING RH.	1	1
- 44	95-440015-5	SEAL,DORSAL FAIRING RH.	1	1
- 45	95-640005-16	SKIN,VERTICAL STABILIZER RH	1	1
- 46	95-640005-30	SKIN,VERTICAL STABILIZER RH	1	1
- 47	45-630005-113	SKIN,RUDDER RH.	1	1
- 48	95-630005-4	SKIN,RUDDER TAB RH.	1	1
- 49	95-410005-55	SKIN,FUSELAGE FWD TOP	1	1
- 50	95-410005-57	SKIN,FUSELAGE FWD TOP	1	1
- 51	95-410029-19	SKIN,FUSELAGE FWD TOP	1	1
- 52	95-420011-85	SKIN,FUSELAGE TOP	1	1
- 53	95-420015-61	SKIN,FUSELAGE TOP	1	1
- 54	95-420015-59	SKIN,FUSELAGE TOP	1	1
- 55	95-440013-3	SKIN,HORIZONTAL STABILIZER UPPER LH	1	1
- 56	95-440013-4	SKIN,HORIZONTAL STABILIZER UPPER RH	1	1
- 57	95-440013-5	SKIN,HORIZONTAL STABILIZER LOWER LH	1	1
- 58	95-440013-6	SKIN,HORIZONTAL STABILIZER LOWER RH	1	1
- 59	95-620010-69	SKIN,HORIZONTAL STABILIZER LEADING EDGE LH.	1	1
- 60	95-620010-70	SKIN,HORIZONTAL STABILIZER LEADING EDGE RH.	1	1
- 61	95-620010-65	SKIN,HORIZONTAL STABILIZER UPPER LH	1	1
- 62	95-620010-66	SKIN,HORIZONTAL STABILIZER UPPER RH	1	1
- 63	95-620010-67	SKIN,HORIZONTAL STABILIZER LOWER LH	1	1
- 64	95-620010-68	SKIN,HORIZONTAL STABILIZER LOWER RH	1	1
- 65	95-610006-13	SKIN,ELEVATOR INBD.	2	1
- 66	45-610005-4	SKIN,ELEVATOR	1	1
- 67	45-610005-5	SKIN,ELEVATOR	1	1

FIG. & INDEX NO.	PART NO.	DESCRIPTION 1 2 3 4 5 6 7	UNITS PER ASSY	USABLE ON CODE
4 - 68	45-660012-1	SKIN,ELEVATOR HORN.	1	1
- 69	45-610005-42	SKIN,ELEVATOR TAB LH.	1	1
- 70	45-610005-43	SKIN,ELEVATOR TAB RH.	1	1
- 71	95-620010-19	SKIN,HORIZONTAL STABILIZER TIP.	2	1
- 72	95-620010-21	SKIN,HORIZONTAL STABILIZER TIP LH	1	1
- 73	95-620010-22	SKIN,HORIZONTAL STABILIZER TIP RH	1	1

CODE EFFECTIVITY

1 TD-303 THRU TD-452

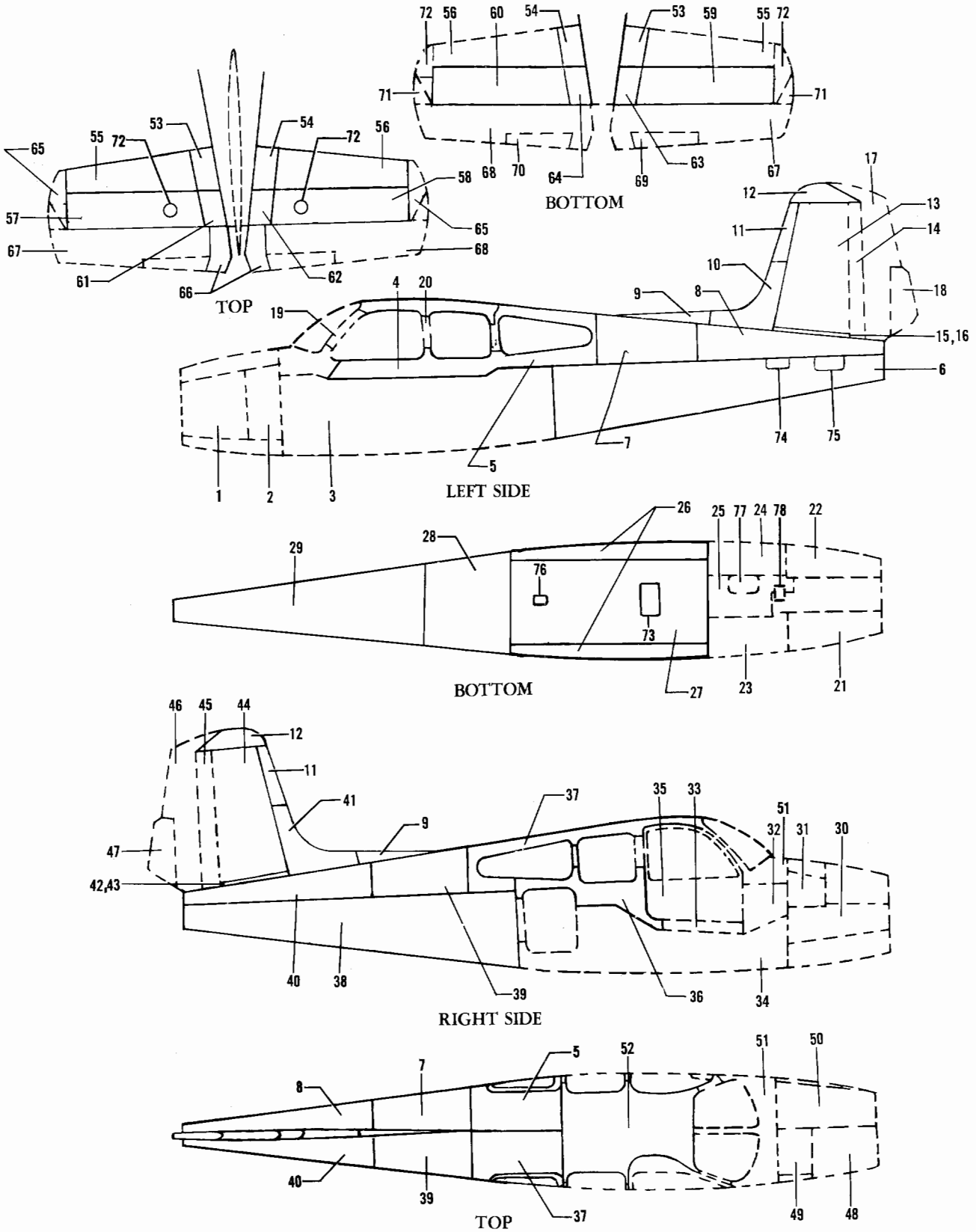

Figure 4A. Fuselage Skin Diagram (TD-453 and after)

FIG. & INDEX NO.	PART NO.	DESCRIPTION 1 2 3 4 5 6 7	UNITS PER ASSY	USABLE ON CODE
4A- 1	¤95-410005-53	SKIN,FUSELAGE FWD LH.	1	1
- 2	¤95-410005-187	SKIN,FUSELAGE FWD LH.	1	1
- 3	¤95-420011-65	SKIN,FUSELAGE MAIN LH	1	1
- 4	¤95-420015-101	SKIN,FUSELAGE MAIN LH	1	1
- 5	95-420015-115	SKIN,FUSELAGE MAIN LH	1	1
- 6	95-440006-67	SKIN,FUSELAGE AFT LH.	1	1
- 7	95-440006-201	SKIN,FUSELAGE AFT LH.	1	1
- 8	95-440006-65	SKIN,FUSELAGE AFT LH.	1	1
- 9	95-440015-15	SKIN,DORSAL FAIRING	1	1
- 10	95-440015-11	SKIN,DORSAL FAIRING	1	2
	¤95-440015-17	SKIN,DORSAL FAIRING	1	3
- 11	95-640006-1	SKIN,VERTICAL STABILIZER LEADING EDGE	1	1
- 12	95-640006-40	SKIN,VERTICAL STABILIZER TIP.	1	1
- 13	95-640005-15	SKIN,VERTICAL STABILIZER LH	1	1
- 14	95-640005-27	SKIN,VERTICAL STABILIZER LH	1	1
- 15	¤95-440015-13	SKIN,DORSAL FAIRING	1	1
- 16	¤95-440015-5	SEAL,DORSAL FAIRING	1	1
- 17	¤45-630005-112	SKIN,RUDDER LH.	1	1
- 18	95-630005-3	SKIN,RUDDER TAB LH.	1	1
- 19	¤35-410452-73	SKIN,CANOPY LH.	1	1
- 20	35-410452-75	SKIN,CANOPY LH.	1	1
- 21	¤95-410005-51	SKIN,FUSELAGE BOTTOM FWD LH	1	1
- 22	¤95-410005-52	SKIN,FUSELAGE BOTTOM FWD RH	1	1
- 23	¤95-420011-55	SKIN,FUSELAGE BOTTOM FWD LH	1	1
- 24	¤95-420011-57	SKIN,FUSELAGE BOTTOM FWD RH	1	1
- 25	¤95-420011-113	SKIN,FUSELAGE BOTTOM FWD CENTER	1	1
- 26	¤95-420015-53	SKIN,FUSELAGE BOTTOM MAIN LH & RH	2	1
- 27	¤95-420015-55	SKIN,FUSELAGE BOTTOM MAIN CENTER.	1	1
- 28	95-440006-69	SKIN,FUSELAGE BOTTOM AFT.	1	1
- 29	95-440006-71	SKIN,FUSELAGE BOTTOM AFT.	1	1
- 30	¤95-410005-61	SKIN,FUSELAGE FWD RH.	1	1
- 31	¤95-410005-59	SKIN,FUSELAGE FWD RH.	1	1
- 32	¤95-420011-45	SKIN,FUSELAGE FWD RH.	1	1
- 33	¤35-410452-3	SKIN,FUSELAGE MAIN RH	1	1
- 34	¤95-420011-79	SKIN,FUSELAGE MAIN RH	1	1
- 35	35-400010-56	SKIN,DOOR	1	1
- 36	¤35-410452-9	SKIN,FUSELAGE MAIN RH	1	1
- 37	95-420015-116	SKIN,FUSELAGE TOP RH.	1	1
- 38	95-440006-68	SKIN,FUSELAGE AFT RH.	1	1
- 39	95-440006-202	SKIN,FUSELAGE AFT RH.	1	1
- 40	95-440006-66	SKIN,FUSELAGE AFT RH.	1	1
- 41	¤95-440015-17	SKIN,DORSAL FAIRING /SUPERSEDES 95-440015-12/	1	2
- 42	¤95-440015-14	SKIN,DORSAL FAIRING RH.	1	1
- 43	¤95-440015-5	SEAL,DORSAL FAIRING RH.	1	1
- 44	95-640005-16	SKIN,VERTICAL STABILIZER RH	1	1
- 45	95-640005-30	SKIN,VERTICAL STABILIZER RH	1	1
- 46	¤45-630005-113	SKIN,RUDDER RH.	1	1
- 47	95-630005-4	SKIN,RUDDER TAB RH.	1	1
- 48	¤95-410029-19	SKIN,FUSELAGE FWD TOP	1	1
- 49	¤95-410005-57	SKIN,FUSELAGE FWD TOP RH.	1	1
- 50	¤95-410005-55	SKIN,FUSELAGE FWD TOP LH.	1	1
- 51	¤95-420011-85	SKIN,FUSELAGE FWD TOP	1	4
	35-410452-179	SKIN,FUSELAGE FWD TOP	1	5
- 52	¤95-420015-61	SKIN,FUSELAGE MAIN TOP.	1	1
- 53	95-620010-79	SKIN,HORIZONTAL STABILIZER LEADING EDGE LH.	1	1
- 54	95-620010-80	SKIN,HORIZONTAL STABILIZER LEADING EDGE RH.	1	1
- 55	95-620010-69	SKIN,HORIZONTAL STABILIZER LEADING EDGE LH.	1	1
- 56	95-620010-70	SKIN,HORIZONTAL STABILIZER LEADING EDGE RH.	1	1
- 57	95-620010-65	SKIN,HORIZONTAL STABILIZER UPPER LH	1	1
- 58	95-620010-66	SKIN,HORIZONTAL STABILIZER UPPER RH	1	1
- 59	95-620010-67	SKIN,HORIZONTAL STABILIZER LOWER LH	1	1
- 60	95-620010-68	SKIN,HORIZONTAL STABILIZER LOWER RH	1	1
- 61	95-620010-81	SKIN,HORIZONTAL STABILIZER UPPER LH	1	1
- 62	95-620010-82	SKIN,HORIZONTAL STABILIZER UPPER RH	1	1

FIG. & INDEX NO.	PART NO.	DESCRIPTION 1 2 3 4 5 6 7	UNITS PER ASSY	USABLE ON CODE
4A- 63	¤95-620010-83	SKIN,HORIZONTAL STABILIZER LOWER LH	1	1
- 64	95-620010-84	SKIN,HORIZONTAL STABILIZER LOWER RH	1	1
- 65	¤95-620010-19	SKIN,HORIZONTAL STABILIZER TIP LH & RH.	2	1
- 66	95-610006-13	SKIN,ELEVATOR INBD LH & RH.	2	1
- 67	45-610005-4	SKIN,ELEVATOR OUTBD LH.	1	1
- 68	¤45-610005-5	SKIN,ELEVATOR OUTBD RH.	1	1
- 69	45-610005-43	SKIN,ELEVATOR TAB LH.	1	1
- 70	45-610005-42	SKIN,ELEVATOR TAB RH.	1	1
- 71	¤95-620010-19	SKIN,HORIZONTAL STABILIZER TIP.	2	1
- 72	¤45-660012-1	SKIN,ELEVATOR TIP	2	1
- 73	¤35-410259-16	DOOR ASSY,LANDING GEAR ACTUATOR ACCESS.	1	1
- 74	95-440005-9	DOOR,AFT FUSELAGE FWD INSPECTION.	1	1
- 75	95-440005-129	DOOR,AFT FUSELAGE AFT INSPECTION.	1	1
- 76	95-440006-33	DOOR,FUSELAGE BOTTOM AFT INSPECTION	1	1
- 77	¤95-420011-107	DOOR,FUSELAGE BOTTOM FWD INSPECTION	1	1
- 78	95-420014-253	DOOR,FUSELAGE BOTTOM FWD ACCESS	1	1

CODE	EFFECTIVITY	CODE	EFFECTIVITY
1	TD-453 AND AFTER EXCEPT TD-491,TD-492	2	TD-453 THRU TD-494
3	TD-491,TD-492, TD-495 AND AFTER	4	TD-453 THRU TD-707
5	TD-708 AND AFTER		

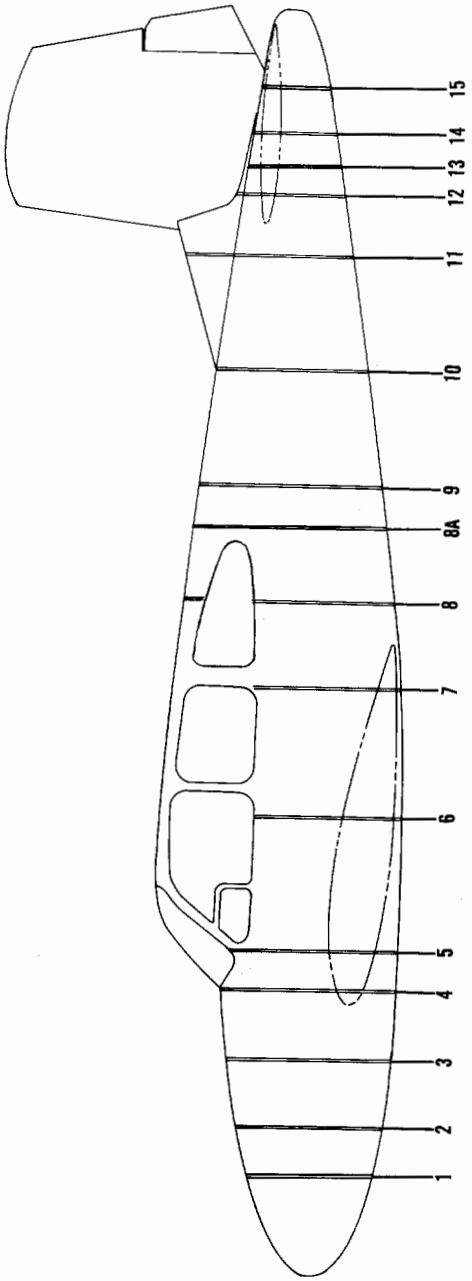

Figure 5. Fuselage Bulkhead Diagram

FIG. & INDEX NO.	PART NO.	DESCRIPTION 1 2 3 4 5 6 7	UNITS PER ASSY	USABLE ON CODE
5 - 1	95-410030-37	BULKHEAD ASSY,STA 12.00	1	
	95-410006-43	BULKHEAD ASSY,STA 21.62 RH	1	1
- 2	95-410005-5	BULKHEAD ASSY,STA 25.25 LH	1	
	95-410005-7	BULKHEAD ASSY,STA 25.25 RH	1	2
	95-410005-13	BULKHEAD ASSY,STA 38.25	1	2
- 3	95-410006-3	BULKHEAD ASSY,STA 38.25	1	1
- 4	35-410215-5	BULKHEAD ASSY,STA 58.50	1	
- 5	95-420011-1	BULKHEAD ASSY,STA 68.00	1	
- 6	95-420011-25	BULKHEAD ASSY,STA 100.00	1	
	95-420011-115	BULKHEAD ASSY,STA 131.00	1	3
- 7	95-420015-35	BULKHEAD ASSY,STA 131.00	1	4
	95-420011-29	BULKHEAD ASSY,STA 151.00	1	3
	95-440006-109	BULKHEAD ASSY,STA 151.00	1	5
- 8	95-440006-171	BULKHEAD ASSY,STA 151.00 LOWER	1	1
	95-440006-173	BULKHEAD ASSY,STA 151.00 UPPER	1	8
	95-440006-213	BULKHEAD ASSY,STA 151.00 UPPER	1	9
- 8A	95-440006-107	BULKHEAD ASSY,STA 170.00	1	5
	95-440006-177	BULKHEAD ASSY,STA 170.00	1	1
	95-430005-27	BULKHEAD ASSY,STA 179.00	1	3
- 9	95-440006-101	BULKHEAD ASSY,STA 179.00	1	5
	95-440006-183	BULKHEAD ASSY,STA 179.00	1	1
- 10	95-430005-39	BULKHEAD ASSY,STA 207.00	1	
	95-440005-23	BULKHEAD ASSY,STA 233.50	1	3
- 11	95-440006-151	BULKHEAD ASSY,STA 233.50	1	4
	95-440005-13	BULKHEAD ASSY,STA 247.83	1	3
- 12	95-440006-612	BULKHEAD ASSY,STA 247.83	1	4
	95-440005-87	BULKHEAD ASSY,STA 257.606	1	3
- 13	95-440013-604	BULKHEAD ASSY,STA 257.606	1	4
	95-440005-37	BULKHEAD ASSY,STA 262.90	1	3
- 14	95-440006-81	BULKHEAD ASSY,STA 262.90	1	4
	95-440005-616	BULKHEAD ASSY,STA 272.00	1	6
	95-440005-620	BULKHEAD ASSY,STA 272.00	1	7
- 15	95-440013-603	BULKHEAD ASSY,STA 272.00	1	4

CODE	EFFECTIVITY	CODE	EFFECTIVITY
1	TD-453 AND AFTER	2	TD-1 THRU TD-452
3	TD-1 THRU TD-302	4	TD-303 AND AFTER
5	TD-303 THRU TD-452	6	TD-1 THRU TD-239
7	TD-240 THRU TD-302	8	TD-453 THRU TD-457
9	TD-458 AND AFTER		

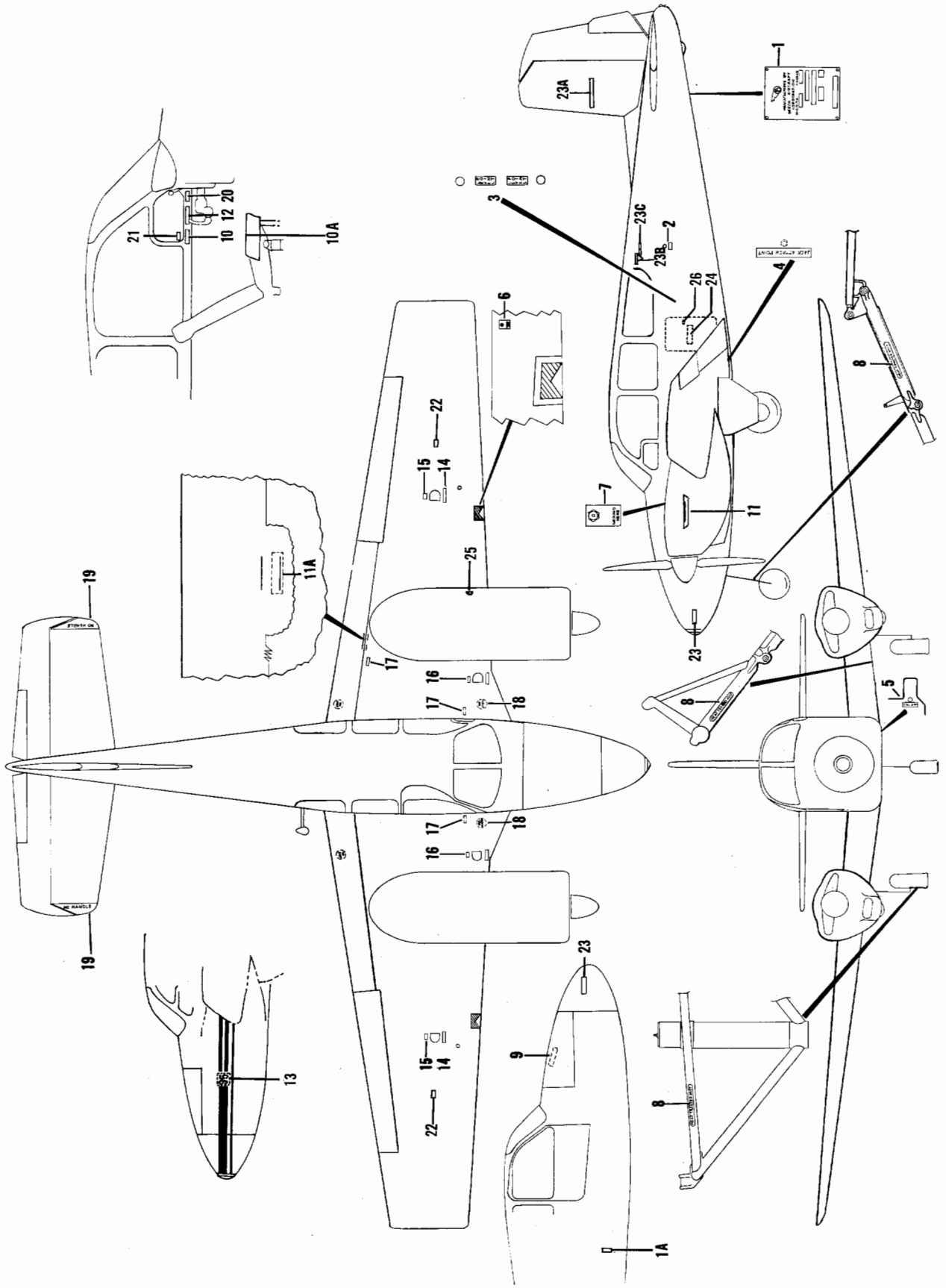

Figure 6. Exterior Placards

FIG. & INDEX NO.	PART NO.	DESCRIPTION 1 2 3 4 5 6 7	UNITS PER ASSY	USABLE ON CODE
6	95-000011	MARKING INSTL,EXTERIOR.	NP	
- 1	¤111745	. PLACARD,MODEL DESIGNATION	1	5
- 1A	130728	. PLACARD,MODEL DESIGNATION	1	6
- 2	35-410286 B-C	. PLACARD,STATIC AIR VENT /BLACK ON CLEAR/. . .	2	
- 2A	35-410286 W-C	. PLACARD,STATIC AIR VENT /WHITE ON CLEAR/. . .	2	
- 3	35-410169 B-C	. PLACARD,LEVEL POINT /BLACK ON CLEAR/.	2	
	35-410169 W-C	. PLACARD,LEVEL POINT /WHITE ON CLEAR/.	2	
- 4	¤112736 B-C	. PLACARD,JACK ATTACH POINT /BLACK ON CLEAR/. .	1	
	¤112736 W-C	. PLACARD,JACK ATTACH POINT /WHITE ON CLEAR/. .	1	
- 5	¤112735 B-C	. PLACARD,JACK PAD /BLACK ON CLEAR/	2	
- 5A	¤112735 W-C	. PLACARD,JACK PAD /WHITE ON CLEAR/	2	
- 6	¤35-361016	. PLACARD,WING GROUND HERE /BLACK/.	2	4
- 7	¤35-361016-1	. PLACARD,FUSELAGE GROUND HERE /WHITE/.	1	
- 8	¤112734	. PLACARD,HEAT TREATED ASSY	5	
- 9	¤96-534043	. PLACARD,BAGGAGE COMPARTMENT LOADING	1	
- 10	¤95-324050	. DECAL,EMERGENCY LANDING EXTENSION	1	5
- 10A	¤33-324032	. DECAL,EMERGENCY LANDING EXTENSION	1	6
- 11	¤95-000012	. PLACARD,AIRCRAFT IDENTIFICATION	2	1
- 11A	96-160006-3	. PLACARD,20 DEGREE FLAP INDICATION	1	
	¤95-000013	. PLATE,EXTERNAL IDENTIFICATION . . . . . /ATTACHING PARTS/	2	2
	¤AN507B632R7	. SCREW	1	
	¤AN960-6L	. WASHER.	1	
	¤MS20364-632	. NUT . . . . . ----*----	1	
	35-000064-1	. PLATE,AIRCRAFT IDENTIFICATION	2	9
	35-000064-3	. PLATE,AIRCRAFT IDENTIFICATION /B95A/.	2	7
	35-000064-45	. PLATE,AIRCRAFT IDENTIFICATION /D95A/. . . . . /ATTACHING PARTS/	2	8
	¤AN507B632R7	. SCREW	2	
	¤AN960-6L	. WASHER.	2	
	¤MS20364-632	. NUT	2	
	¤A109-014-1	. NUT . . . . . ----*----	2	
- 12	¤95-324042	. PLACARD,OPERATING SPEEDS INSTRUCTIONS	1	1
	¤95-324065	. DECAL,OPERATING SPEEDS INSTRUCTIONS	1	3
- 13	95-000018-1	. EMBLEM,MODEL 95 /E95/	2	6
- 14	¤35-921241-1	. PLACARD,IDENTIFICATION FUEL /WHITE/	4	
	¤35-921241-3	. PLACARD,IDENTIFICATION FUEL /BLACK/	4	
- 15	¤95-921013-1	. PLACARD,FUEL TANK CAPACITY /WHITE/.	2	
	¤95-921013-3	. PLACARD,FUEL TANK CAPACITY /BLACK/.	2	
- 16	¤95-921012-1	. PLACARD,FUEL TANK CAPACITY /WHITE/.	2	
	¤95-921012-3	. PLACARD,FUEL TANK CAPACITY /BLACK/.	2	
- 17	¤35-924148 B-C	. PLACARD,FUEL DRAIN /BLACK ON CLEAR/	4	
	¤35-924148 W-C	. PLACARD,FUEL DRAIN /WHITE ON CLEAR/	4	
- 18	¤112733-2	. PLACARD,BLACK NO STEP	4	
	¤112733-4	. PLACARD,RED NO STEP /ALTERNATE FOR 112733-2/.	4	
- 19	¤115081-5	. PLACARD,BLACK NO HANDLE . . . . . /SUPERSEDES 115081-1/	2	
	¤115081-7	. PLACARD,RED NO HANDLE /SUPERSEDES 115081-3/ . /ALTERNATE FOR 115081-5/	2	
- 20	¤95-324030	. PLACARD,OPERATION LIMITATIONS INSTRUCTIONS. .	1	
- 21	¤35-000061	. PLACARD,EXTERIOR PAINT PROTECTION INSTRUCTION	1	
- 22	¤95-921016-1	. PLACARD,FUEL NOZZLE CAUTION INSTRUCTION WHITE	2	
- 22	¤95-921016-3	. PLACARD,FUEL NOZZLE CAUTION INSTRUCTION BLACK	2	
- 23	¤95-410035 B-C	. PLACARD,DO NOT PUSH INSTRUCTIONS. . . . . /BLACK ON CLEAR/	2	
- 23A	¤115098-3	. PLACARD,BEECHCRAFT.	2	
- 23B	¤130071	. EMBLEM,BEECHCRAFT	2	3
- 23C	¤95-000017	. EMBLEM,TRAVEL AIR . . . . . /ATTACHING PARTS/	2	3
	¤AN507-632R7	. SCREW	4	
	¤AN960-6L	. WASHER.	4	
	¤MS20365-632	. NUT	4	
	¤A109-014-1	. NUT . . . . . ----*----	4	

FIG. & INDEX NO.	PART NO.	DESCRIPTION 1 2 3 4 5 6 7	UNITS PER ASSY	USABLE ON CODE
6 - 24	¤35-534315	PLACARD,BAGGAGE DOOR.	1	1
	¤95-534026	PLACARD,BAGGAGE DOOR.	1	2
	¤96-534046	PLACARD,BAGGAGE DOOR.	1	3
	¤35-534384	PLACARD,BAGGAGE DOOR /USE WITH JUMP SEAT/ . . .	1	
- 25	¤112700	PLACARD,EXTERNAL POWER.	1	
- 26	¤35-410457	PLACARD,BAGGAGE DOOR LOCK INSTRUCTION	1	

CODE	EFFECTIVITY	CODE	EFFECTIVITY
1	TD-1 THRU TD-302	2	TD-303 THRU TD-452
3	TD-453 AND AFTER	4	TD-1 THRU TD-525
5	TD-1 THRU TD-707	6	TD-708 AND AFTER
7	TD-453 THRU TD-533	8	TD-534 THRU TD-707
9	TD-453 THRU TD-707		

BLANK PAGE

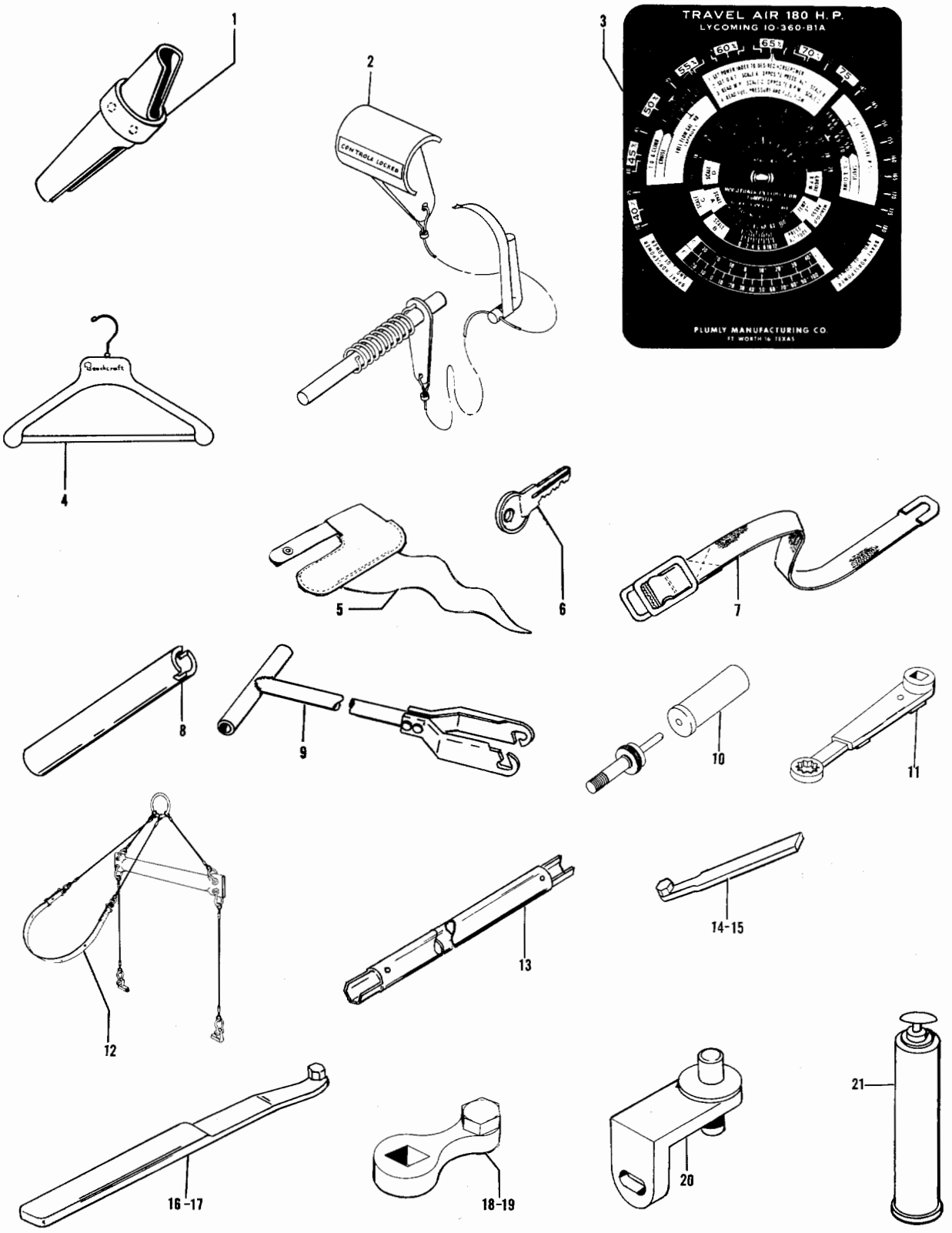

Figure 7. Loose Tools & Accessories

FIG. & INDEX NO.	PART NO.	DESCRIPTION 1 2 3 4 5 6 7	UNITS PER ASSY	USABLE ON CODE
7 -	95-590000	LOOSE TOOLS & ACCESSORIES /STANDARD/.	NP	7
	95-590002	LOOSE TOOLS & ACCESSORIES /STANDARD/.	NP	21
- 1	¤35-590006	. ADAPTER ASSY,MAIN WHEEL JACK.	1	
	¤95-590011	. LOCK ASSY,CONTROL SURFACE & THROTTLE.	1	1
- 2	¤95-590031	. LOCK ASSY,CONTROL SURFACE & THROTTLE.	1	2
	95-590014	. KIT,SERVICE INFORMATION	1	
	¤95-590014-1	. . MANUAL,TRAVEL AIR OWNERS.	1	3
	¤95-590014-37	. . MANUAL,TRAVEL AIR OWNERS.	1	4
	¤95-590014-53	. . MANUAL,TRAVEL AIR OWNERS.	1	5
	¤95-590014-61	. . MANUAL,TRAVEL AIR OWNERS.	1	6
	95-590002-1	. . MANUAL,TRAVEL AIR OWNERS.	1	21
	¤95-590014-31	. . MANUAL,FAA APPROVED FLIGHT.	1	8
	¤95-590014-33	. . MANUAL,FAA APPROVED FLIGHT.	1	9
	¤95-590014-35	. . MANUAL,FAA APPROVED FLIGHT.	1	10
	¤95-590014-39	. . MANUAL,FAA APPROVED FLIGHT.	1	4
	¤95-590014-51	. . MANUAL,B95A FAA APPROVED FLIGHT	1	5
	¤95-590014-59	. . MANUAL,D95A FAA APPROVED FLIGHT	1	6
	130741	. . MANUAL,E95 FAA APPROVED FLIGHT.	1	21
	¤95-590014-5	. . CHECK LIST,MODEL 95 PILOTS.	1	3
	¤95-590014-41	. . CHECK LIST,MODEL B95 PILOTS	1	4
	¤95-590014-55	. . CHECK LIST,MODEL B95A PILOTS.	1	5
	¤95-590014-63	. . CHECK LIST,MODEL D95A PILOTS.	1	6
	¤95-590002-3	. . CHECK LIST,MODEL E95 PILOTS	1	21
	113667F	. . DIRECTORY,BEECHCRAFT SERVICE FACILITY . . .	1	
	NO NUMBER	. . MANUAL,HARTZELL PROPELLER MODEL 8447-124. .	1	7
	NO NUMBER	. . MANUAL,HARTZELL PROPELLER NO. 106	1	21
	NO NUMBER	. . BULLETIN,HARTZELL NUMBER 31	1	11
	55-590000-45	. . FLIGHT MANUAL SUPPLEMENT,DE-ICE SYSTEM. . .	1	21
	130598	. . FLIGHT MANUAL SUPPLEMENT,MAGIC HAND	1	21
	0S59-1	. . LETTER,BEECHCRAFT SERVICE	1	
	¤24C54	. MANUAL,11C30 IGNITER ASSY	1	11
	¤30C57	. MANUAL,D83A28 HEATER ASSY	1	11
	118504	. DISASSEMBLY & CRATING INSTRUCTIONS. . . . . /SUPPLIED WITH CRATED EXPORT AIRPLANE ONLY/	1	
	118505	. UNCRATING,ERECTION & TESTING INSTRUCTIONS . . /SUPPLIED WITH CRATED EXPORT AIRPLANE ONLY/	1	
	¤95-590020-15	. CALCULATOR,HORSEPOWER	1	12
- 3	¤95-590034	. CALCULATOR,HORSEPOWER & FLIGHT. . . . . /NIGHT READING/	1	20
- 4	¤35-590058	. HANGER ASSY,CLOTHING.	2	
- 5	¤45-590059	. COVER ASSY,HEATED PITOT TUBE.	1	
- 6	95-590015-1	. KEY,MODEL 95 LOCK	2	13
-	¤130066-3	. KEY,MODEL 95 LOCK /SUPERSEDES 35-590070-1/. .	2	14
	35-590070-27	. KEY,BATTERY ON ONLY	1	15
	35-590070-29	. KEY RING ASSY,TRAVELAIR	1	15
	35-590070-41	. KEY RING ASSY,TRAVELAIR	1	19
	EF5	. BOOK,ENGINE LOG	1	
	AF5	. BOOK,AIRPLANE LOG	1	
	4X10-1/4X33	. BOX,CARDBOARD	1	16
- 7	¤113658-034-00	. STRAP ASSY.	1	16
	¤R903	. BAG,FLIGHT /SUPERSEDES A903/.	1	17
- 8	¤50-590106	. WRENCH,SUMP DRAIN	1	
	NO NUMBER	. HANDBOOK,GYRO HORIZON MODEL H-1	1	
- 9	¤95-590033-1	. HANDLE ASSY,MODEL 95 TOW. . . . . /SUPERSEDES 95-590021/	1	
- 10	¤300-911-930	. KIT,TUBELESS TIRE INFLATION VALVE . . . . . /SUPERSEDES 206-108172/	1	18
	95-590001	LOOSE TOOLS & ACCESSORIES /OPTIONAL/.	NP	
- 11	¤50-590014	. ADAPTER ASSY,FWD WING NUT TORQUE WRENCH . . .	1	
- 12	¤95-590016-1	. SLING ASSY,HOISTING	1	
	¤95-590018	. CATALOG,MODEL 95 PARTS.	1	

FIG. & INDEX NO.	PART NO.	DESCRIPTION 1 2 3 4 5 6 7	UNITS PER ASSY	USABLE ON CODE
7 -	¤A1327	. WRENCH,PROPELLER MOUNTING SCREW	1	
	¤95-590001-1	. MANUAL,MODEL 95 SERIES SHOP	1	
	¤60297-4	. MANUAL,ENGINE OPERATORS	1	7
	¤60299-16	. MANUAL,ENGINE OPERATORS	1	21
	¤15-338B	. MANUAL,BENDIX RSA FUEL INJECTION SERVICE. . .	1	
	95-590001-5	. SUPPLEMENT,T-3 AUTOPILOT FLIGHT MANUAL. . . .	1	
- 13	¤TK1521	. WRENCH,LIGHT INSTRUMENT POST.	1	
- 14	¤TS1222-1	. WRENCH,UPPER FRONT & LOWER REAR WING BOLT NUT	1	
	¤95-590026	. FORM,BEECHCRAFT MODEL 95 100 HOUR INSPECTION.	1	
- 15	¤50-590011	. WRENCH,UPPER REAR WING BOLT NUT . . . . . /SUPERSEDES TS1222-2/	1	
- 16	¤TS1222-3	. WRENCH,UPPER & LOWER FRONT &. . . . . LOWER REAR WING BOLT	1	
- 17	¤TS1222-4	. WRENCH,UPPER REAR WING BOLT	1	
- 18	¤50-590013	. ADAPTER,UPPER REAR WING BOLT NUT TORQUE . . . WRENCH	1	
- 19	¤TS1171-2	. ADAPTER,UPPER FRONT & LOWER REAR WING BOLT. . NUT TORQUE WRENCH	1	
- 20	¤TK1518	. ADAPTER,SERVICE JACK ANGLE.	1	
	¤212 FLASHLIGHT	PENLIGHT.	1	
	35-574021	FIRE EXTINGUISHER INSTL,HAND.	NP	3
	95-570000-1	FIRE EXTINGUISHER INSTL,HAND. . . . . /SUPERSEDES 95-570000/	NP	11
- 21	¤FR2 1/2	. FIRE EXTINGUISHER ASSY. . . . . /SUPERSEDES A2/ /ATTACHING PARTS/	1	
	AN507-832-10	. SCREW	6	
	¤AN960-8	. WASHER.	6	
	¤AN366F832	. NUTPLATE.	6	

----*----

CODE	EFFECTIVITY	CODE	EFFECTIVITY
1	TD-1 THRU TD-547	2	TD-548 AND AFTER
3	TD-1 THRU TD-302	4	TD-303 THRU TD-452
5	TD-453 THRU TD-533	6	TD-534 THRU TD-707
7	TD-1 THRU TD-707	8	TD-1 THRU TD-60
9	TD-61 THRU TD-71	10	TD-72 THRU TD-302
11	TD-303 AND AFTER	12	TD-1 THRU TD-483
13	TD-1 THRU TD-173, AND TD-185	14	TD-174 AND AFTER EXCEPT TD-185
15	TD-520 THRU TD-604	16	TD-1 THRU TD-498
17	TD-499 AND AFTER	18	TD-300 AND AFTER
19	TD-605 AND AFTER	20	TD-484 AND AFTER
21	TD-708 AND AFTER		

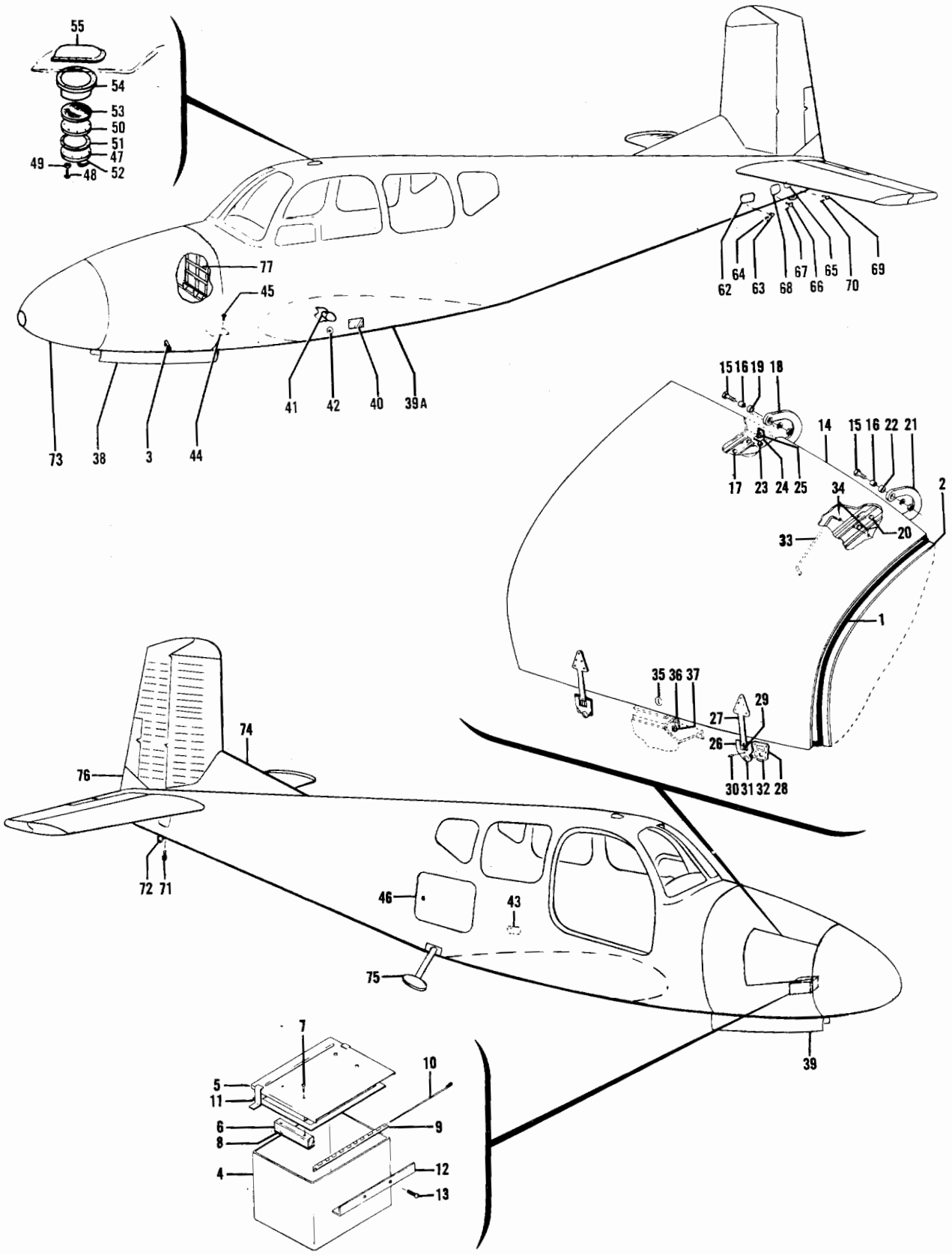

Figure 8. Fuselage Structure

FIG. & INDEX NO.	PART NO.	DESCRIPTION 1 2 3 4 5 6 7	UNITS PER ASSY	USABLE ON CODE
8 -	95-400005	STRUCTURE ASSY,FUSELAGE	1	1
	95-400006	STRUCTURE ASSY,FUSELAGE	1	2
	95-400007	STRUCTURE ASSY,FUSELAGE /FIXED WINDOWS, ... PASSENGER/	1	7
	95-400008	STRUCTURE ASSY,FUSELAGE /OPENABLE WINDOWS,. . . PASSENGER/	1	4
	95-400008-5	STRUCTURE ASSY,FUSELAGE /W/UTILITY BAGGAGE/ . .	1	16
	95-400008-7	STRUCTURE ASSY,FUSELAGE /STANDARD/.	1	14
	95-400008-9	STRUCTURE ASSY,FUSELAGE /W/UTILITY BAGGAGE/ . .	1	14
	95-410005	. STRUCTURE ASSY,FUSELAGE NOSE.	1	5
	95-410006	. STRUCTURE ASSY,FUSELAGE NOSE.	1	12
	95-410006-85	. STRUCTURE ASSY,FUSELAGE NOSE.	1	16
	95-410006-107	. STRUCTURE ASSY,FUSELAGE NOSE.	1	14
- 1	¤95-410005-49	. . SEAL,NOSE ACCESS DOOR	1	13
	95-410006-117	. . SEAL ASSY,NOSE ACCESS DOOR.	1	14
- 2	¤95-410005-39	. . RETAINER,NOSE ACCESS DOOR SEAL.	1	
- 3	¤95-410005-141	. . VENT,FUSELAGE NOSE.	1	
	95-410006-51	. . TUBE,BATTERY VENT	1	3
	95-410006-83	. . END FITTING,BATTERY VENT TUBE	1	6
- 4	95-410005-611	. . BOX ASSY,BATTERY.	1	5
	95-410005-179	. . BOX ASSY,BATTERY.	NP	5
	95-410006-610	. . BOX ASSY,BATTERY.	1	3
	95-410006-19	. . BOX ASSY,BATTERY.	NP	3
	¤95-410006-1	. . BULKHEAD,STA 38.25 BATTERY BOX.	1	3
	95-410005-199	. . LID ASSY,BATTERY BOX /ONE BATTERY/.	1	5
	95-410006-603	. . LID ASSY,BATTERY BOX /ONE BATTERY/.	1	3
	95-410006-33	. . LID ASSY,BATTERY BOX /ONE BATTERY/.	NP	3
	95-410005-163	. . LID ASSY,BATTERY BOX /TWO BATTERIES/. . . .	1	5
	95-410006-601	. . LID ASSY,BATTERY BOX /TWO BATTERIES/. . . .	1	3
	95-410006-29	. . LID ASSY,BATTERY BOX /TWO BATTERIES/. . . .	NP	3
- 5	95-410005-197	. . . LID,BATTERY BOX /ONE BATTERY/	1	5
	95-410006-31	. . . LID,BATTERY BOX /ONE BATTERY/	1	3
	95-410005-161	. . . LID,BATTERY BOX /TWO BATTERIES/	1	5
	95-410006-21	. . . LID,BATTERY BOX /TWO BATTERIES/	1	3
- 6	95-410005-125	. . . SPACER,BATTERY BOX LID. . . . . /ATTACHING PARTS/	2	
- 7	AN545-8R7	. . . SCREW . . . . . ----*----	4	
- 8	95-410005-127	. . . PAD,BATTERY BOX LID SPACER.	2	
- 9	95-410005-157	. . . HINGE,BATTERY BOX LID	2	5
	95-410005-157	. . . HINGE,BATTERY BOX LID	1	3
	95-410005-81	. . . HINGE,BATTERY BOX	1	3
- 10	95-410005-195	. . . PIN,HINGE	1	5
	95-410006-27	. . . PIN,HINGE	1	3
- 11	95-410005-169	. . . GASKET,BATTERY BOX LID.	1	5
	95-410006-25	. . . GASKET,BATTERY BOX LID.	1	3
- 12	¤95-410005-193	. . ANGLE,BATTERY BOX . . . . . /ATTACHING PARTS/	1	5
- 13	AN520R1032	. . SCREW . . . . . ----*----	5	
	95-410029	. . DOOR INSTL,NOSE ACCESS.	NP	11
	95-410029-37	. . DOOR INSTL,NOSE ACCESS.	NP	15
	95-410029-55	. . DOOR INSTL,NOSE ACCESS.	NP	14
- 14	¤95-410029-602	. . . DOOR ASSY,NOSE ACCESS	1	
	¤95-410029-1	. . . DOOR ASSY,NOSE ACCESS	NP	11
	¤95-410029-612	. . . DOOR ASSY,NOSE ACCESS	1	15
	95-410029-613	. . . DOOR ASSY,NOSE ACCESS /SEE FIG. 8A/ . . . /ATTACHING PARTS/	1	14
- 15	¤AN4A6/M/	. . . BOLT.	2	
- 16	105739X-XC0219	. . . BUSHING	2	
	¤AN960-416L	. . . WASHER.	2	
	¤MS20365-428	. . . NUT /SUPERSEDES AN365-428/. . . . . ----*----	2	
	95-410029-7	. . . . HINGE ASSY,NOSE ACCESS DOOR AFT	1	13

FIG. & INDEX NO.	PART NO.	DESCRIPTION 1 2 3 4 5 6 7	UNITS PER ASSY	USABLE ON CODE
8 -	95-410029-51	. . . . HINGE ASSY,NOSE ACCESS DOOR AFT	1	14
		/ATTACHING PARTS/		
- 17	¤AN3A6/M/	. . . . BOLT.	3	
	¤AN960-10L	. . . . WASHER.	3	
	¤MS20365-1032	. . . . NUT /SUPERSEDES AN365-1032/	3	
		----*----		
- 18	95-410029-5	. . . . . HINGE,NOSE ACCESS DOOR.	1	13
- 19	101321-2G0188	. . . . . BUSHING,PRESS FIT	1	13
	95-410029-41	. . . . HINGE ASSY,NOSE ACCESS DOOR FWD	1	
		/ATTACHING PARTS/		
- 20	¤AN3-6A/M/	. . . . BOLT.	3	
	¤AN960-10L	. . . . WASHER.	3	
	MS20365-1032	. . . NUT /SUPERSEDES AN365-1032/.	3	
		----*----		
- 21	95-410029-5	. . . . . HINGE,NOSE ACCESS DOOR.	1	
- 22	101321-2G0188	. . . . . BUSHING,PRESS FIT	1	
- 23	¤MS20520-1032	. . . SCREW /SUPERSEDES AN520-1032/	1	
- 24	¤AN960-10	. . . WASHER.	2	
- 25	¤MS20364-1032	. . . NUT /SUPERSEDES AN364-1032/	2	
	414-184040-13	. . . LATCH INSTL,NOSE ACCESS DOOR.	NP	13
	95-410029-71	. . . LATCH COVER ASSY,FWD.	1	14
	95-410029-69	. . . LATCH COVER ASSY,AFT.	1	14
	¤414-184040-1	. . . . LEVER ASSY,NOSE ACCESS DOOR	2	13
	60-384013-5	. . . . LATCH,FWD	1	14
	60-384013-7	. . . . LATCH,AFT	1	14
	95-410029-67	. . . . BOOT,FWD & AFT.	2	14
	95-410029-81	. . . . COVER,FWD	1	14
	60-410052-1	. . . . COVER,AFT	1	14
- 26	¤414-184040-3	. . . . . LEVER,NOSE ACCESS DOOR.	2	13
- 27	¤414-184040-15	. . . . STRAP,NOSE ACCESS DOOR LATCH.	2	13
- 28	¤414-184040-9	. . . . PLATE,NOSE ACCESS DOOR LATCH.	2	13
	¤414-184040-19	. . . . BOLT ASSY,NOSE ACCESS DOOR LATCH. . . .	2	13
- 29	¤414-184040-21	. . . . . BOLT,T.	2	13
- 30	414-184040-17	. . . . . PIN,NOSE ACCESS DOOR LATCH.	2	13
- 31	W98292-2-160	. . . . STUD,NOSE ACCESS DOOR LATCH	1	13
- 32	¤99836	. . . . PIN,NOSE ACCESS DOOR LATCH.	1	13
- 32A	95-410006-115	. . . CATCH	1	14
- 33	¤95-410029-25	. . . STOP,NOSE ACCESS DOOR	1	13
	¤95-410029-45	. . . STOP,NOSE ACCESS DOOR	1	14
		/ATTACHING PARTS/		
- 34	AN380-1-2	. . . PIN,COTTER.	2	
	¤AN960-416L	. . . WASHER.	2	
		----*----		
- 35	F6747RX2	. . . LOCK ASSY,NOSE ACCESS DOOR.	1	13
		/SUPERSEDES 35-590070-11/		
	35-590070-55	. . . LOCK ASSY,NOSE ACCESS DOOR.	1	14
	47	. . . . CAM,NOSE BAGGAGE DOOR LOCK.	1	13
	60-400011-7	. . . PAWL.	1	14
- 36	95-410005-201	. . . HOOK,NOSE ACCESS DOOR	1	8
		/ATTACHING PARTS/		
- 37	¤MS20365-1032	. . . NUT	2	
	¤AN960-10	. . . WASHER.	2	
		----*----		
- 38	95-410031-1	. . DOOR INSTL,NOSE GEAR LH /SEE FIG. 45/ . . .	NP	
- 39	95-410031-2	. . DOOR INSTL,NOSE GEAR RH /SEE FIG. 45/ . . .	NP	
	95-420011	. STRUCTURE ASSY,CABIN.	1	1
	95-420015	. STRUCTURE ASSY,CABIN.	1	2
	95-420015-105	. STRUCTURE ASSY,CABIN.	1	3
	95-400008-1	. STRUCTURE ASSY,CABIN /OPENABLE WINDOWS/ . . .	1	4
	95-400008-3	. STRUCTURE ASSY,CABIN.	1	16
	95-420015-185S	. STRUCTURE ASSY,CABIN.	1	14
	95-420015-187	. STRUCTURE ASSY,CABIN.	1	14
- 39A	95-400006-638	. . BELLY SECTION /WITH SIDES/.	1	
	95-400005-634	. . . BOTTOM CABIN PANEL.	1	1
	95-400006-634	. . . BOTTOM CABIN PANEL.	1	9
- 40	35-410231	. . PLACARD,FUSELAGE WIRING ATTACHMENT.	1	
- 41	95-420011-155	. . BOOT,LANDING GEAR ACTUATOR ARM.	2	

FIG. & INDEX NO.	PART NO.	DESCRIPTION 1 2 3 4 5 6 7	UNITS PER ASSY	USABLE ON CODE
8 - 42	95-420011-157	. . PATCH,AILERON & AILERON TAB CABLE	2	
- 43	¤81A16758-3/4	. . BUTTON,PLUG /SUPERSEDES 81A16758/	1	
- 44	95-420011-107	. . DOOR,ACCESS	1	
		/ATTACHING PARTS/		
- 45	¤AN525-10R6	. . SCREW	10	
		----*----		
- 46	95-420015-89	. . DOOR INSTL,BAGGAGE /SEE FIG. 9/	NP	
	95-420011-43	. . CANOPY INSTL,CABIN.	NP	10
	95-420015-65	. . CANOPY INSTL,CABIN.	NP	2
	95-420015-103	. . CANOPY INSTL,CABIN.	NP	3
	95-420015-87	. . CANOPY INSTL,CABIN /OPENABLE WINDOWS/ . . .	NP	4
- 47	35-410154-1	. . . VENT ASSY,CABIN	1	
		/ATTACHING PARTS/		
- 48	¤NAS384-6-12P	. . . SCREW	4	
	¤NAS391-6P	. . . WASHER.	4	
- 49	¤A1784-6Z-3	. . . NUT	4	
		----*----		
- 50	35-410154	. . . . PLATE ASSY,CABIN VENT	1	
		/SUPERSEDES 35-410155/		
- 51	¤35-410154-3	. . . . SHIM,CABIN VENT	1	
- 52	35-410156	. . . . SHUTTER,CABIN VENT /BUY 35-410154/. . .	NP	
	AN960D4	. . . . WASHER.	1	
- 53	¤35-410038-124	. . . SCREEN,CABIN VENT	1	1
	¤183946	. . . SCREEN,CABIN VENT	1	9
- 54	35-410153	. . . DUCT,CABIN EXHAUST VENT	1	1
	95-420015-63	. . . DUCT.	1	9
- 55	35-410152	. . . VENT,CABIN EXHAUST.	1	
		INDEXES 56 THRU 61 ARE DELETED.		
	95-430005	. STRUCTURE ASSY,FUSELAGE MID SECTION	1	1
	95-440005	. STRUCTURE ASSY,AFT FUSELAGE TAIL.	1	1
	95-440006	. STRUCTURE ASSY,AFT FUSELAGE	1	2
	95-440006-185	. STRUCTURE ASSY,AFT FUSELAGE	1	3
- 62	¤95-440005-9	. . DOOR,AFT FUSELAGE ACCESS.	2	
		/ATTACHING PARTS/		
- 63	98265-1-080	. . STUD,AFT FUSELAGE ACCESS DOOR	4	
- 64	¤99836	. . PIN,AFT FUSELAGE ACCESS DOOR.	4	
		----*----		
	95-440005-95	. . DOOR ASSY,AFT FUSELAGE ACCESS LH.	1	1
	95-440005-96	. . DOOR ASSY,AFT FUSELAGE ACCESS RH.	1	1
- 65	45-410021-6	. . . DOOR,AFT FUSELAGE ACCESS LH	1	1
	45-410021-7	. . . DOOR,AFT FUSELAGE ACCESS RH	1	1
		/ATTACHING PARTS/		
- 66	¤98265-1-080	. . . STUD,AFT FUSELAGE ACCESS DOOR	7	
- 67	¤99836	. . . PIN,AFT FUSELAGE ACCESS DOOR.	7	
		----*----		
	45-410021-10	. . DOOR ASSY,AFT FUSELAGE ACCESS LH.	1	1
	45-410021-11	. . DOOR ASSY,AFT FUSELAGE ACCESS RH.	1	1
- 68	45-410021-4	. . . DOOR,AFT FUSELAGE ACCESS LH	1	1
	45-410021-5	. . . DOOR,AFT FUSELAGE ACCESS RH	1	1
		/ATTACHING PARTS/		
- 69	¤98265-1-080	. . . STUD,AFT FUSELAGE ACCESS DOOR	8	
- 70	¤99836	. . . PIN,AFT FUSELAGE ACCESS DOOR.	8	
		----*----		
	95-440006-129	. . DOOR,AFT FUSELAGE ACCESS.	1	9
		/ATTACHING PARTS/		
	¤PK76XZ-8-7	. . SCREW	6	
	¤NAS444-4	. . NUT /SUPERSEDES A6196-8Z3/.	6	
		----*----		
- 71	¤35-400213	. . LUG,TAIL TIE DOWN	1	
		/ATTACHING PARTS/		
- 72	AN507-1032	. . SCREW	4	
	¤AN960-10L	. . WASHER.	4	
	¤MS20365-1032	. . NUT /SUPERSEDES AN365-1032/	4	
		----*----		

FIG. & INDEX NO.	PART NO.	DESCRIPTION 1 2 3 4 5 6 7	UNITS PER ASSY	USABLE ON CODE
8 - 73	95-410011	. FAIRING INSTL,FUSELAGE NOSE /SEE FIG. 17/ . .	NP	11
	95-410040-5	. FAIRING INSTL,FUSELAGE NOSE /SEE FIG. 17/ . .	NP	6
- 74	95-440011	. FAIRING INSTL,DORSAL FIN /SEE FIG. 3/	NP	1
	95-440015	. FAIRING INSTL,DORSAL FIN /SEE FIG. 4/	NP	2
	95-440015	. FAIRING INSTL,DORSAL FIN /SEE FIG. 4A/. . . .	NP	3
- 75	95-400012	. STEP INSTL,ASSIST /SEE FIG. 16/	NP	1
	95-440014	. STEP INSTL,ASSIST /SEE FIG. 16A/.	NP	9
- 76	¤45-440000-602	. CONE ASSY,TAIL /SEE FIG. 17/.	1	5
	45-440000-606	. CONE ASSY,TAIL /SEE FIG. 17/.	1	3
- 77	¤95-410033-27	WEB ASSY,LH /LONGEST VERTICAL STRAP,. . . . . APPROXIMATELY 17 INCHES LONG/	1	
	¤95-410033-28	WEB ASSY,RH /USED WITHOUT PROPELLER ANTI-ICER/.	1	
	95-410033-47	WEB ASSY,LH /LONGEST VERTICAL STRAP,. . . . . APPROXIMATELY 6 1/2 INCHES LONG/ /USED WITH PROPELLER ANTI-ICER/	1	
	95-410033-48	WEB ASSY,RH	1	

CODE	EFFECTIVITY	CODE	EFFECTIVITY
1	TD-1 THRU TD-302	2	TD-303 THRU TD-452
3	TD-453 AND AFTER	4	TD-501 THRU TD-637
5	TD-1 THRU TD-452	6	TD-534 AND AFTER
7	TD-453 THRU TD-533	8	TD-174 THRU TD-302
9	TD-303 AND AFTER	10	TD-1 THRU TD-173
11	TD-1 THRU TD-533	12	TD-453 THRU TD-637
13	TD-1 THRU TD-707	14	TD-708 AND AFTER
15	TD-534 THRU TD-707	16	TD-638 THRU TD-707

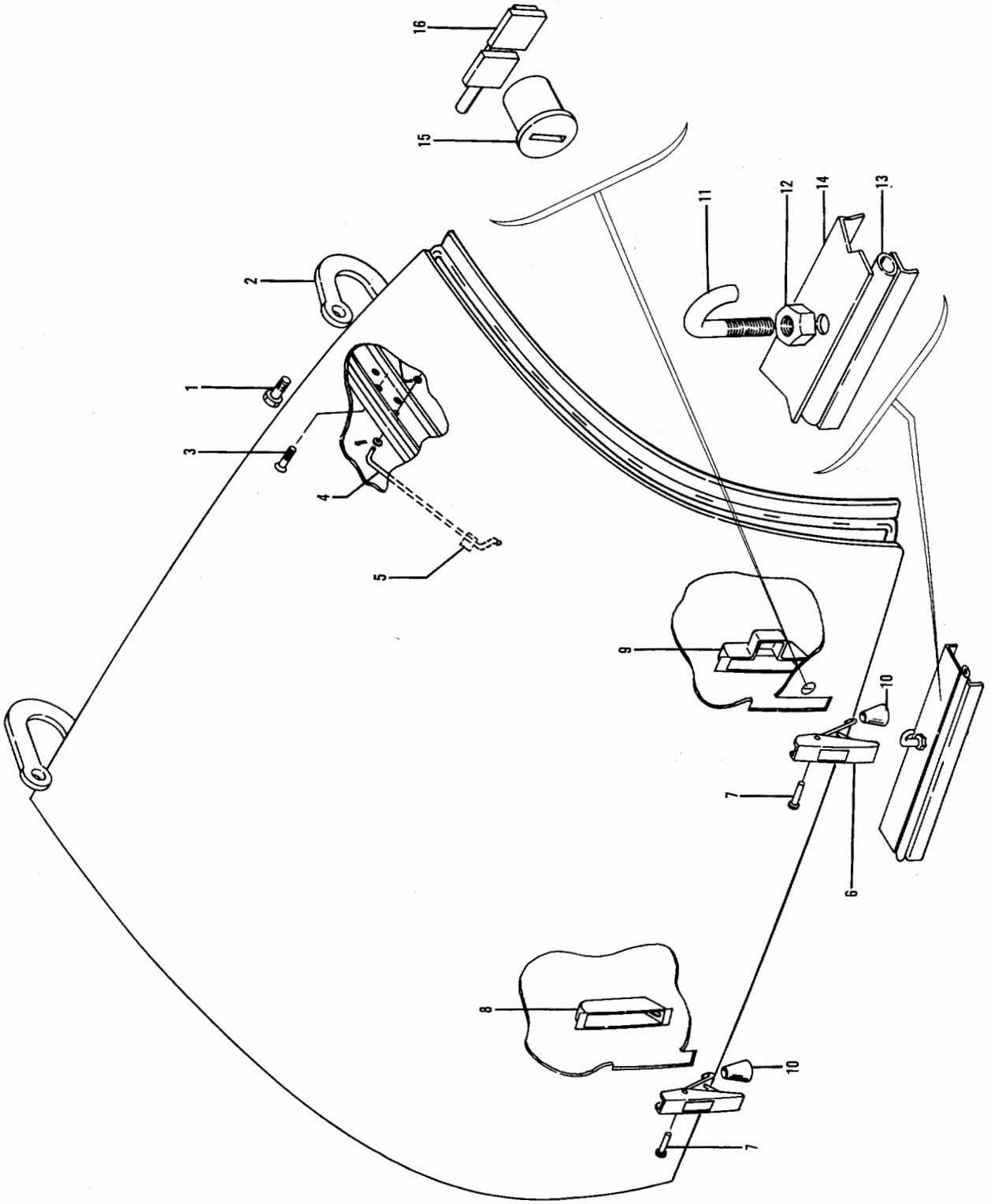

Figure 8A. Nose Baggage Door (TD-708 And After)

FIG. & INDEX NO.	PART NO.	DESCRIPTION 1 2 3 4 5 6 7	UNITS PER ASSY	USABLE ON CODE
8A-	95-410006-107	NOSE STRUCTURE ASSEMBLY	NP	1
	95-410029-55	. NOSE BAGGAGE DOOR INSTALLATION.	NP	1
	95-410029-613	. . NOSE BAGGAGE DOOR ASSEMBLY.	1	1
		/ATTACHING PARTS/		
- 1	AN4A	. . BOLT.	1	
	¤AN960-416L	. . WASHER.	2	
	¤MS20365-428	. . NUT	1	
		----*----		
- 2	95-410029-41	. . HINGE ASSY,FORWARD.	1	1
	95-410029-51	. . HINGE ASSY,AFT.	1	1
		/ATTACHING PARTS/		
- 3	AN509-10R11	. . SCREW	3	
	¤AN960-10L	. . WASHER.	3	
	¤MS20365-1032	. . NUT	3	
		----*----		
- 4	¤95-410029-45	. . STOP.	1	1
		/ATTACHING PARTS/		
	¤AN960-416L	. . WASHER.	2	
	¤MS24665-5	. . PIN	2	
		----*----		
- 5	¤185678	. . CLIP.	1	1
- 6	60-384013-5	. . LATCH,NEXT TO LOCK ASSY	1	1
		/ATTACHING PARTS/		
- 7	MS20392-2C39	. . PIN	1	
	MS24665-151	. . PIN,COTTER.	1	
	¤AN960-10L	. . WASHER.	1	
		----*----		
	60-384013-7	. . LATCH ASSY,AFT.	1	1
- 8	95-410029-81	. . COVER,AFT	1	1
- 9	60-410052-1	. . COVER,FORWARD	1	1
- 10	95-410029-67	. . BOOT.	1	1
- 11	95-410006-115	. HOOK.	2	1
		/ATTACHING PARTS/		
- 12	¤AN316-4R	. CHECK,NUT	1	
	¤AN935-416	. LOCK WASHER	1	
	NAS1029N4	. NUTPLATE.	1	
		----*----		
- 13	95-410006-117	. SEAL ASSY	1	1
	95-410006-119	. . SEAL,LOWER.	1	1
	95-410006-121	. . SEAL,AFT.	1	1
	95-410006-123	. . SEAL,UPPER.	1	1
	95-410006-125	. . SEAL,FWD.	1	1
	96-384007	. . SEAL,CORNER	4	1
- 14	95-410006-113	. DOOR LEDGE.	1	1
- 15	35-590070-55	. LOCK ASSY	1	1
	9899	. . PLUG.	1	1
- 16	60-400011-7	. . PAWL.	1	1

CODE EFFECTIVITY

1 TD-708 AND AFTER

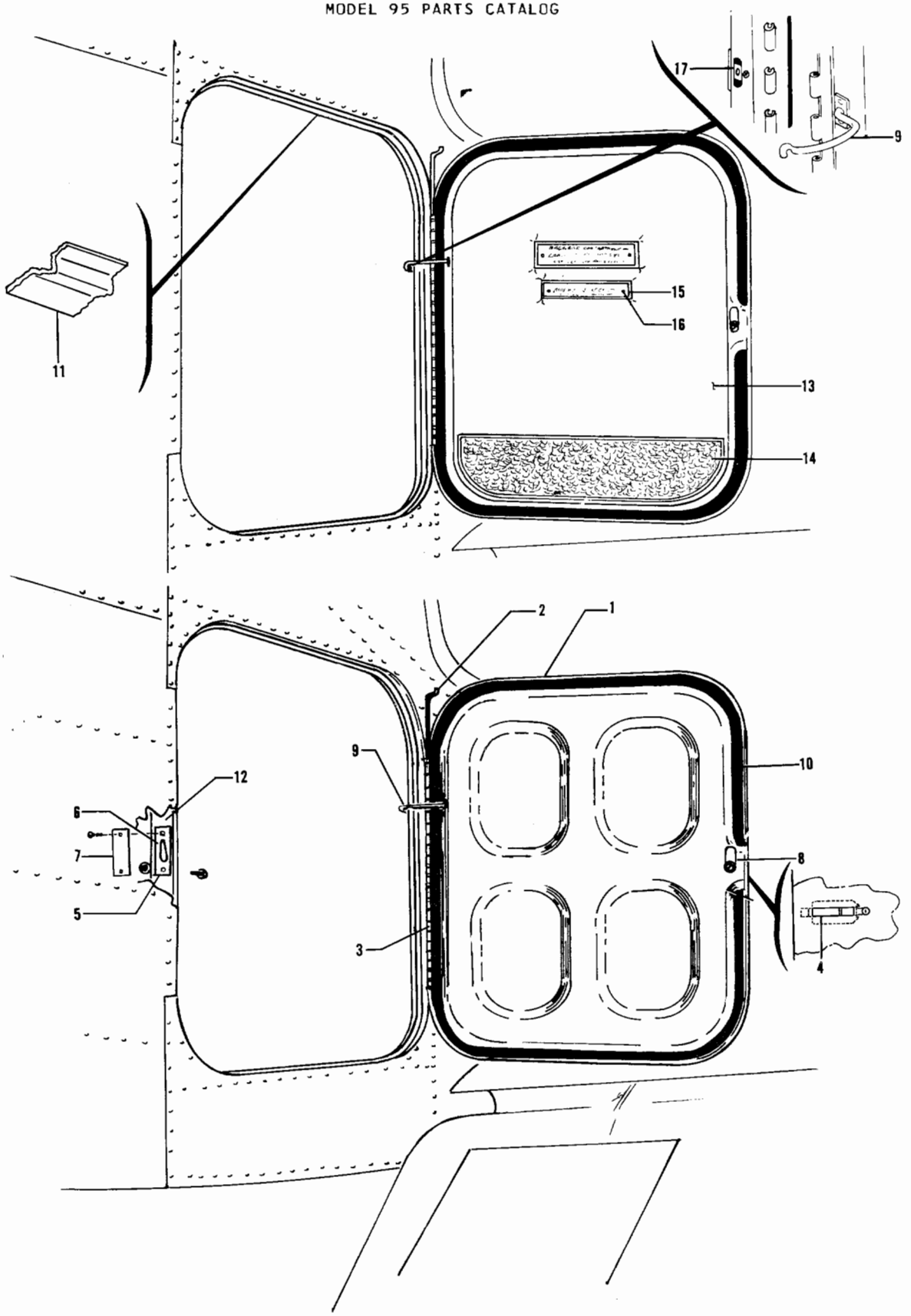

Figure 9. Baggage Compartment Door

FIG. & INDEX NO.	PART NO.	DESCRIPTION 1 2 3 4 5 6 7	UNITS PER ASSY	USABLE ON CODE
9	95-420015-89	DOOR INSTL,BAGGAGE /SEE FIG. 8 FOR NHA/	NP	10
	95-420015-169	DOOR INSTL,BAGGAGE /SEE FIG. 8 FOR NHA/	NP	8
- 1	◻35-410070-606	. DOOR ASSY,BAGGAGE /SPARE ASSY/. . . . . /SUPERSEDES 35-410070-604/	1	10
	35-410070-93	. DOOR ASSY,BAGGAGE . . . . . /ATTACHING PARTS/	1	8
- 2	35-410070-14	. PIN,BAGGAGE DOOR HINGE.	1	1
	35-410070-79	. PIN,BAGGAGE DOOR HINGE.	1	2
		----*----		
- 3	35-410070-10	. . HALF HINGE /DOOR/	1	
- 4	◻35-415416	. . LATCH ASSY,BAGGAGE DOOR . . . . . /ATTACHING PARTS/	1	8
	AN507-6-6	. . SCREW	6	
		----*----		
	35-410070-12	. . HINGE,HALF /FUSELAGE/	1	10
	35-410070-12	. . HINGE,HALF /FUSELAGE/	1	8
- 5	◻35-410432	. CATCH ASSY,BAGGAGE DOOR . . . . . /ATTACHING PARTS/	1	1
	AN526-1032R8	. SCREW	4	
	◻AN960-10L	. WASHER.	4	
	◻MS20365-1032	. NUT /SUPERSEDES AN365-1032/	4	
		----*----		
- 6	◻96-430011-19	. STRIKER BLOCK	1	9
- 7	◻96-430011-29	. STRIKER BLOCK . . . . . /ATTACHING PARTS/	1	8
	AN526-10R	. SCREW	2	
		----*----		
- 8	◻F6605DX2	. LOCK ASSY,BAGGAGE DOOR. . . . . /SUPERSEDES 35-590070-7/	1	3
	◻F6608DX2	. LOCK ASSY,BAGGAGE DOOR. . . . . /SUPERSEDES 35-59007-9/	1	4
	◻35-590070-23	. LOCK ASSY,BAGGAGE DOOR.	1	9
	35-590070-35	. LOCK ASSY,BAGGAGE DOOR /ORDER F6608EX2/ . . .	NP	8
	◻F6608EX2	. . TUMBLER	1	
	8	. . CAM	1	8
	◻35-410214	. STOP ASSY,BAGGAGE DOOR.	1	3
- 9	◻35-410214-5	. STOP ASSY,BAGGAGE DOOR.	1	5
- 10	◻S152X84	. SEAL,BAGGAGE DOOR /SUPERSEDES 35-410070-48/ .	1	3
	◻35-410070-65	. SEAL.	1	4
	◻35-410070-75	. . SEAL /INSERT INSIDE -65/.	2	4
	◻96-430011-17	. SEAL.	1	2
	◻35-410070-67	. SEAL.	1	6
- 11	◻96-430011-25	. SEAL,STRIP.	1	2
	◻96-430011-23	. SEAL,STRIP.	1	2
	◻96-430011-21	. STRIP . . . . . /ATTACHING PARTS/	1	2
	PK76XZ6	. SCREW	10	
	◻PK65A4-6	. SCREW	3	
		----*----		
- 12	◻35-410070-77	. FILLER,STRIP.	1	2
- 13	95-534014-59	PANEL ASSY,BAGGAGE DOOR /SEE FIG. 12A FOR NHA/. /USED WITH JUMP SEAT INSTL/	1	7
- 14	NO NUMBER	. CARPET,SCUFF.	1	7
- 15	◻35-534384	. PLACARD,JUMP SEAT CAPACITY INSTRUCTION. . . . /ATTACHING PARTS/	1	7
- 16	AN530-6	. SCREW	2	
	NAS446-2	. NUT	2	
		----*----		
- 17	◻35-410180-14	STOP,DOOR	1	

CODE	EFFECTIVITY	CODE	EFFECTIVITY
1	TD-1 THRU TD-516	2	TD-517 AND AFTER
3	TD-1 THRU TD-173	4	TD-174 THRU TD-516
5	TD-174 AND AFTER	6	TD-453 THRU TD-516
7	TD-174 THRU TD-302	8	TD-552 AND AFTER
9	TD-517 THRU TD-551	10	TD-1 THRU TD-551

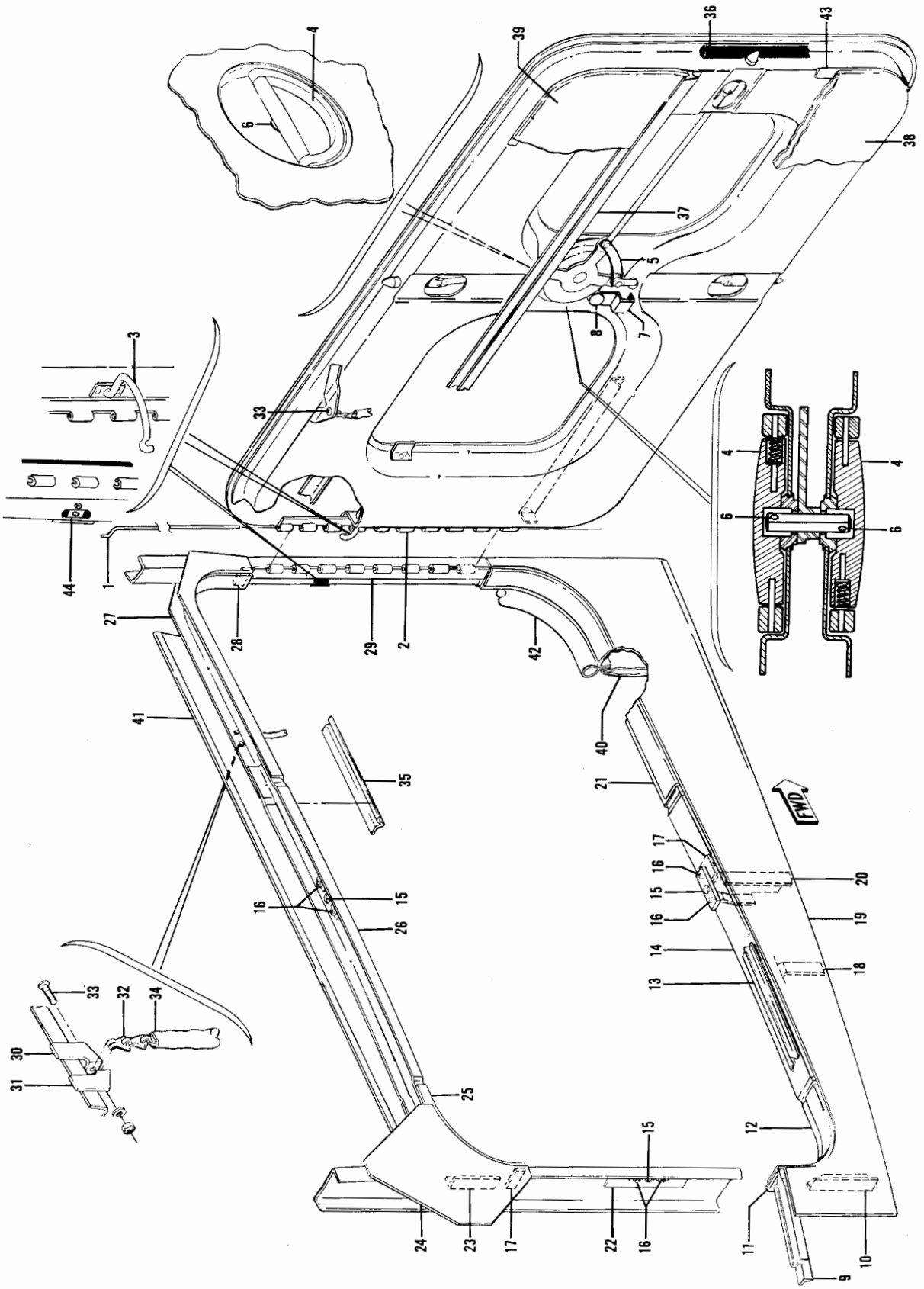

Figure 9A. Utility Baggage Door

FIG. & INDEX NO.	PART NO.	DESCRIPTION 1 2 3 4 5 6 7	UNITS PER ASSY	USABLE ON CODE
9A	96-420016	DOOR INSTL,UTILITY BAGGAGE.	NP	1
	96-420016-119	DOOR INSTL,UTILITY BAGGAGE.	NP	3
	96-420016-191	DOOR INSTL,UTILITY BAGGAGE.	NP	4
	96-420016-69	. DOOR ASSY,UTILITY BAGGAGE	1	2
	96-420016-169	. DOOR ASSY,UTILITY BAGGAGE	1	4
		/ATTACHING PARTS/		
- 1	35-410070-14	. PIN,HINGE	1	
		----*----		
- 2	¤96-420016-97	. . HINGE HALF,BAGGAGE DOOR	1	
- 3	¤35-410214-5	. . STOP ASSY,BAGGAGE DOOR.	1	
	3006 BOLT	. . BOLT ASSY,UTILITY BAGGAGE DOOR.	1	
	3003	. . BOLT ASSY,UTILITY BAGGAGE DOOR.	1	4
- 4	¤DY1399-4	. . . HANDLE ASSY,UTILITY BAGGAGE DOOR.	1	2
	¤DY1399-4	. . . HANDLE ASSY,UTILITY BAGGAGE DOOR.	2	4
- 5	96-420016-159	. . STRIKER,UTILITY BAGGAGE DOOR.	1	
- 6	79-032-156-0562	. . PIN,ROLL /HANDLE ATTACHING/	1	2
	79-032-156-0562	. . PIN,ROLL /HANDLE ATTACHING/	2	4
	¤96-420016-135	. LOCK ASSY,UTILITY BAGGAGE DOOR.	1	
- 7	¤96-420016-161	. . CAM	1	
- 8	¤F6608EX2	. . PLUG.	1	
- 9	96-420016-95	. ANGLE,LOWER AFT	1	
- 10	96-420016-27	. ANGLE,LOWER AFT	1	
- 11	96-420016-11	. FILLER.	2	
- 12	96-420016-15	. SILL ASSY,AFT LOWER	1	
- 13	¤96-420016-55	. SEAL STRIP.	2	
		/ATTACHING PARTS/		
	¤PK65A4-6	. SCREW	12	
	PK76-2-6	. SCREW	13	
		----*----		
- 14	96-420016-5	. CHANNEL,LOWER	1	
- 15	¤96-420016-29	. STRIKER BLOCK	3	
		/ATTACHING PARTS/		
- 16	MS27039-1-12	. SCREW	2	
	¤NAS686A3	. NUTPLATE.	2	
		----*----		
- 17	96-420016-17	. CLIP,DOOR FRAME	1	
- 18	¤96-420016-13	. STIFFENER,LOWER DOOR SILL	1	
- 19	96-420016-177	. DOUBLER /SUPERSEDES 96-420016-3/.	1	
- 20	96-420016-121	. CHANNEL,LOWER	1	
- 21	96-420016-9	. SILL ASSY,FWD LOWER	1	
- 22	96-420016-101	. DOUBLER,AFT	1	
- 23	35-410160-32	. ANGLE,UPPER AFT	1	
- 24	96-420016-1	. DOUBLER,UPPER AFT	1	
- 25	96-420016-71	. CORNER ASSY,AFT UPPER	1	
- 26	96-420016-21	. CHANNEL,UPPER	1	
- 27	96-420016-73	. CORNER ASSY,FWD UPPER	1	
- 28	35-410075	. FILLER,FWD UPPER.	1	
- 29	¤96-420016-99	. HINGE HALF,FUSELAGE	1	
- 30	96-420016-103	. CLIP,DOOR STOP CHAIN FWD.	1	
- 31	96-420016-104	. CLIP,DOOR STOP CHAIN AFT.	1	
- 32	¤NAS1455C8-16C	. CHAIN,DOOR STOP	1	
		/ATTACHING PARTS/		
- 33	¤AN515-8R8	. SCREW	2	
	¤MS20365-832	. NUT	2	
		----*----		
- 34	¤106242-5-01550	. SERCO,CHAIN COVER	1	
- 35	¤96-420016-57	. SEAL STRIP,TOP HALF	1	
- 36	¤96-420016-59	. SEAL,UTILITY BAGGAGE DOOR	1	
- 37	96-420016-81	. TRIM,BAGGAGE DOOR UPHOLSTERY.	1	
	¤96-420016-111	. UPHOLSTERY PANEL ASSY,DOOR LOWER.	1	5
- 38	96-420016-65	. . PANEL,DOOR LOWER.	1	5
	96-420016-189	. UPHOLSTERY PANEL ASSY,DOOR LOWER.	1	6
	96-420016-185	. . PANEL,DOOR LOWER.	1	6
	96-420016-175	. UPHOLSTERY PANEL ASSY,DOOR LOWER.	1	4
	96-420016-187	. . PANEL,DOOR LOWER.	1	4

FIG. & INDEX NO.	PART NO.	DESCRIPTION 1 2 3 4 5 6 7	UNITS PER ASSY	USABLE ON CODE
9A-	96-420016-75	. UPHOLSTERY PANEL ASSY,DOOR UPPER.	1	5
- 39	96-420016-181	. . PANEL,DOOR UPPER.	1	5
	96-420016-179	. UPHOLSTERY PANEL ASSY,DOOR UPPER.	1	7
	96-420016-183	. . PANEL,DOOR UPPER.	1	7
	96-420016-89C	. PANEL ASSY,BELOW DOOR FRAME UPHOLSTERY. . . .	1	
- 40	96-420016-87	. . PANEL,BELOW DOOR FRAME UPHOLSTERY	1	
	96-420016-143	. PANEL ASSY,ABOVE DOOR FRAME UPHOLSTERY. . . .	1	5
- 41	96-420016-139	. . PANEL,ABOVE DOOR FRAME UPHOLSTERY	1	5
	96-420016-147	. PANEL ASSY,ABOVE DOOR FRAME UPHOLSTERY. . . .	1	7
	96-420016-145	. . PANEL,ABOVE DOOR FRAME UPHOLSTERY	1	7
- 42	96-420016-115	. WINDLACE,UTILITY BAGGAGE DOOR FRAME	1	
- 43	96-420016-113	. SEAL,UTILITY BAGGAGE DOOR	1	
- 44	¤35-410180-14	. STOP,UTILITY BAGGAGE DOOR FRAME	1	

CODE	EFFECTIVITY	CODE	EFFECTIVITY
1	TD-1 THRU TD-627	2	TD-1 THRU TD-711
3	TD-628 THRU TD-711	4	TD-712 AND AFTER
5	TD-1 THRU TD-707	6	TD-708 THRU TD-711
7	TD-708 AND AFTER		

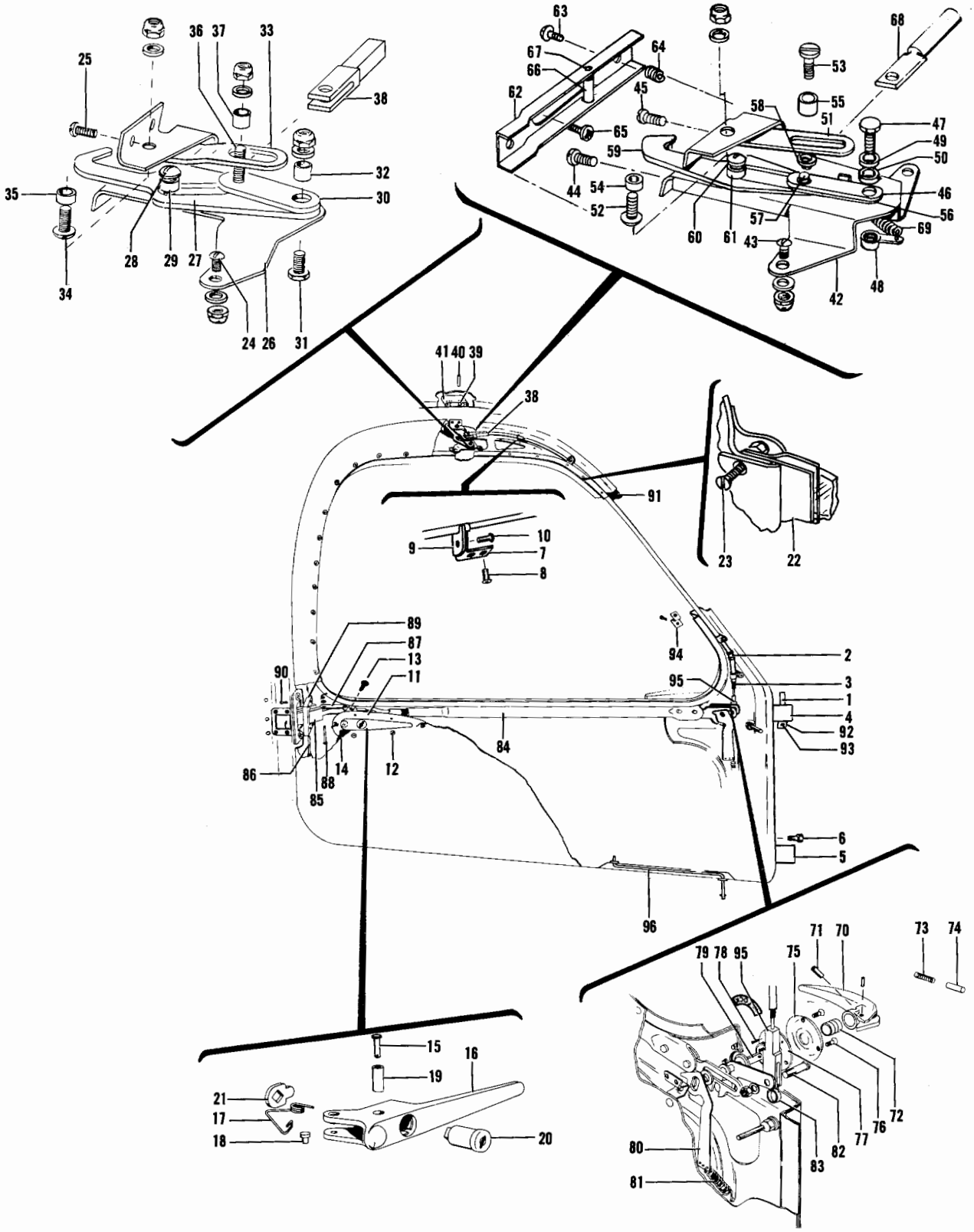

Figure 10. Cabin Door

B1

FIG. & INDEX NO.	PART NO.	DESCRIPTION 1 2 3 4 5 6 7	UNITS PER ASSY	USABLE ON CODE
10 -	95-420012	DOOR INSTL,CABIN.	NP	1
	95-420012-11	DOOR INSTL,CABIN.	NP	2
	95-420012-13	DOOR INSTL,CABIN.	NP	3
	95-420012	DOOR INSTL,CABIN.	NP	13
-	95-420012-601	. CABIN DOOR FRAME & WINDOW ASSY.	1	4
	95-420012-603	. CABIN DOOR FRAME & WINDOW ASSY.	1	5
	95-420012-614	. CABIN DOOR FRAME & WINDOW ASSY.	1	13
	35-400320-36	. DOOR ASSY,CABIN	NP	14
	95-420012-45	. DOOR ASSY,CABIN	NP	13
		/ATTACHING PARTS/		
- 1	AN393-63	. PIN	2	
		----*----		
	35-400010-6	. . FRAME ASSY,CABIN DOOR	1	
	35-400010-42	. . . BRAZE ASSY,CABIN DOOR	1	
- 2	A-6983-335	. . . . TUBE ASSY,CABIN DOOR.	1	
		/SUPERCEDES 35-400010-32/		
- 3	HE636	. . . . CABLE ASSY,CABIN DOOR	1	
		/SUPERSEDES 9461/		
- 4	35-400018	. . . HINGE ASSY,CABIN DOOR UPPER	1	14
	35-400018-8	. . . HINGE ASSY,CABIN DOOR UPPER	1	15
	35-400018-12	. . . HINGE ASSY,CABIN DOOR UPPER	1	16
- 5	35-400008	. . . HINGE ASSY,CABIN DOOR LOWER	1	14
	35-400008-8	. . . HINGE ASSY,CABIN DOOR LOWER	1	15
	35-400008-12	. . . HINGE ASSY,CABIN DOOR LOWER	1	16
		/ATTACHING PARTS/		
- 6	AN3-5A	. . . BOLT.	2	
	AN960-10	. . . WASHER.	2	
	22A21-6-02	. . . NUT	2	
		----*----		
- 7	35-400010-36	. . . BRACKET,CABIN DOOR HINGE.	1	
		/ATTACHING PARTS/		
- 8	AN507-632R6	. . . SCREW	2	
	AN960-6	. . . WASHER.	2	
	AN365-632	. . . NUT	2	
		----*----		
- 9	35-400010-34	. . . SWIVEL,CABIN DOOR HINGE	1	
		/ATTACHING PARTS/		
- 10	AN520-10R8	. . . SCREW	1	
	AN960-10	. . . WASHER.	1	
	AN365-1032	. . . NUT	1	
		----*----		
- 11	35-400032-2	. . . SUPPORT ASSY,CABIN DOOR OUTSIDE HANDLE. .	1	
		/ATTACHING PARTS/		
- 12	AN507-440R4	. . . SCREW	6	
- 13	AN507-832R8	. . . SCREW	2	
		----*----		
- 14	35-400404	. . . SEAL,SUPPORT.	1	
	35-400014-613	. . HANDLE ASSY,CABIN DOOR OUTSIDE.	1	
		/ATTACHING PARTS/		
- 15	MS20392-2-37	. . PIN,/SUPERCEDES AN393-37/	1	
		----*----		
- 16	35-400013	. . . HANDLE,CABIN DOOR OUTSIDE	1	
- 17	35-400031	. . . SPRING,CABIN DOOR OUTSIDE	1	
- 18	35-400033	. . . STUD,CABIN DOOR HANDLE OUTSIDE.	1	
- 19	101321-00A0750	. . . BUSHING,SPECIAL BEARING	1	
- 20	F-6600-CX2	. . . PLUG,LOCK /SUPERCEDES 35-590070-3/. . . .	1	
	F6100X2	. . . PLUG,LOCK	1	
- 21	35-400044	. . . CAM,CABIN DOOR HANDLE	1	
- 22	35-400320-32	. . SASH ASSY,CABIN DOOR.	1	14
	35-400320-15	. . SASH ASSY,CABIN DOOR.	1	13
		/ATTACHING PARTS/		
- 23	AN507-632R6	. . SCREW	46	
	AN365-632	. . NUT	46	
		----*----		
	50-400356	. . LATCH INSTL,CABIN DOOR UPPER.	NP	4
	50-400356-19	. . . LATCH ASSY,CABIN DOOR UPPER	1	4
		/ATTACHING PARTS/		
- 24	AN507-832-6	. . . SCREW	1	
- 25	AN525-832R6	. . . SCREW	2	
	AN960-8L	. . . WASHER.	3	
	AN365-832	. . . NUT	3	
		----*----		

FIG. & INDEX NO.	PART NO.	DESCRIPTION 1 2 3 4 5 6 7	UNITS PER ASSY	USABLE ON CODE
10 - 26	50-400356-3	. . . . BRACKET,CABIN DOOR UPPER LATCH.	1	4
- 27	50-400356-1	. . . . WELD ASSY,DOOR LATCH.	1	4
		/ATTACHING PARTS/		
- 28	AN525-10-8	. . . . SCREW	1	
	AN960-10	. . . . WASHER.	1	
- 29	105739X-ZR0140	. . . . BUSHING	1	
	AN365-1032	. . . . NUT	1	
		----*----		
- 30	50-400356-7	. . . . LINK,CABIN DOOR LATCH	1	4
		/ATTACHING PARTS/		
- 31	AN3-6	. . . . BOLT.	1	
- 32	105739X-ZR0320	. . . . BUSHING	1	
	AN960-10	. . . . WASHER.	1	
	AN365-1032	. . . . NUT	1	
		----*----		
- 33	50-400365-5	. . . . LINK,UPPER LATCH.	1	4
		/ATTACHING PARTS/		
- 34	AN525-10-8	. . . . SCREW	1	
- 35	105739X-ZR0140	. . . . BUSHING.	1	
	AN960-10	. . . . WASHER.	1	
	AN365-1032	. . . . NUT	1	
		----*----		
- 36	50-400356-13	. . . . STUD,DOOR UPPER LATCH	1	4
- 37	105739X-ZR0328	. . . . BUSHING	1	4
- 38	50-400356-15	. . . TERMINAL,DOOR UPPER LATCH	1	4
- 39	50-400357-5	. . . STOP,UPPER LATCH.	1	4
		/ATTACHING PARTS/		
- 40	102809-125-029	. . . PIN	1	
		----*----		
- 41	50-400357-3	. . . CATCH,UPPER LATCH	1	4
	100942L0116-37	. . . SPRING.	1	4
	35-410456	. . LATCH INSTL,CABIN DOOR UPPER.	NP	5
	35-410456-601	. . . LATCH ASSY,CABIN DOOR UPPER	1	5
	35-410456-1	. . . . BRACKET ASSY,CABIN DOOR UPPER	1	5
- 42	35-410456-3	. . . . . BRACKET,CABIN DOOR UPPER.	1	5
		/ATTACHING PARTS/		
- 43	AN525-8R6	. . . . . SCREW	2	
- 44	AN507-832-6	. . . . . SCREW	1	
- 45	AN507-632	. . . . . SCREW	1	
	AN960-8L	. . . . . WASHER.	2	
	AN365-832	. . . . . NUT	2	
		----*----		
- 46	35-410456-31	. . . . LINK,CABIN DOOR UPPER LATCH	1	5
		/ATTACHING PARTS/		
- 47	AN3-6A	. . . . BOLT.	1	
	100951X100YF	. . . . WASHER.	1	
	AN960-10	. . . . WASHER.	2	
- 48	35-410456-21	. . . . NUT,CABIN DOOR UPPER LATCH LINK	1	
		----*----		
- 49	105739X-ZR0110	. . . . BUSHING,BEARING	1	5
- 50	105739X-ZR0173	. . . . BUSHING,BEARING	1	5
- 51	35-410456-11	. . . . LINK,CABIN DOOR UPPER LATCH	1	5
		/ATTACHING PARTS/		
- 52	AN525-10R7	. . . . SCREW	1	
- 53	35-410456-17	. . . . STUD,CABIN DOOR UPPER LATCH LINK. . . .	1	
	AN960-10L	. . . . WASHER.	2	
	AN960-10	. . . . WASHER.	1	
	MS20364-1032	. . . . NUT	2	
		----*----		
- 54	105739X-ZR0070	. . . . BUSHING,BEARING	1	5
- 55	105739X-ZR0220	. . . . BUSHING,BEARING	1	5
- 56	35-410456-7	. . . . LINK,CABIN DOOR UPPER LATCH	1	5
		/ATTACHING PARTS/		
- 57	35-410456-17	. . . . STUD,CABIN DOOR UPPER LATCH LINK. . . .	1	
	AN960-10	. . . . WASHER.	1	
	MS20364-1032	. . . . NUT	1	
		----*----		
- 58	105739X-ZR0187	. . . . BUSHING,BEARING	1	5

FIG. & INDEX NO.	PART NO.	DESCRIPTION 1 2 3 4 5 6 7	UNITS PER ASSY	USABLE ON CODE
10 - 59	35-410456-5	. . . . LATCH,CABIN DOOR UPPER.	1	5
		/ATTACHING PARTS/		
- 60	AN525-10R9	. . . . SCREW	1	
	AN960-10	. . . . WASHER.	1	
	MS20364-1032	. . . . NUT	1	
		----*----		
- 61	105739X-ZR0110	. . . . BUSHING,BEARING	1	5
	35-410456-19	. . . . SUPPORT,CABIN DOOR UPPER LATCH.	1	6
		/ATTACHING PARTS/		
	AN509-10R12	. . . . SCREW	2	
	AN960-10	. . . . WASHER.	AR	
		----*----		
- 62	35-410456-27	. . . . CHANNEL,CABIN DOOR UPPER LATCH.	1	7
		/ATTACHING PARTS/		
- 63	AN525-10	. . . . SCREW	2	
- 64	100943CRZX020F	. . . . SPRING,COMPRESSION.	1	
	AN960-10	. . . . WASHER.	1	
		----*----		
- 65	AN525-10	. . . . SCREW	1	7
	100801X12-0605	. . . . BUSHING,CABIN DOOR UPPER LATCH.	1	6
- 66	35-410456-29	. . . . BUSHING,CABIN DOOR UPPER LATCH.	1	7
- 67	102809-125-029	. . . . PIN,CABIN DOOR UPPER LATCH.	1	5
- 68	35-410456-13	. . . . TERMINAL,CABIN DOOR UPPER LATCH	1	5
- 69	100942H0022-22	. . . . SPRING,TENSION.	1	5
- 70	2104	. . HANDLE ASSY,INSIDE DOOR	1	8
	95-380010	. . HANDLE ASSY,INSIDE DOOR	1	16
	35-400014-613	. . HANDLE ASSY,INSIDE DOOR	1	17
		/ATTACHING PARTS/		
- 71	35-400465	. . PIN	1	8
	AN507-832R18	. . SCREW	2	9
		----*----		
- 72	35-400467-3	. . BUSHING,INSIDE DOOR HANDLE.	1	8
- 73	35-400434	. . SPRING,INSIDE DOOR HANDLE	1	10
- 74	102809A187-024	. . PIN	1	10
- 75	35-400435	. . PLATE ASSY,INSIDE DOOR HANDLE	1	8
		/ATTACHING PARTS/		
- 76	AN507-632R10	. . SCREW	2	
	100951CR-WP	. . WASHER.	AR	
		----*----		
- 77	35-400395	. . PLATE,INSIDE CABIN DOOR HANDLE.	1	
		/ATTACHING PARTS/		
- 78	AN507-632-8	. . SCREW	3	
		----*----		
- 79	35-400464-4	. . SHAFT ASSY,CABIN DOOR HANDLE INSIDE	1	11
	35-400464-6	. . SHAFT ASSY,CABIN DOOR HANDLE INSIDE	1	12
	35-400464-8	. . SHAFT ASSY,CABIN DOOR HANDLE INSIDE	1	9
- 80	35-400462	. . STOP,INSIDE CABIN DOOR HANDLE	1	
- 81	100942W0023-17	. . SPRING,STOP	1	
- 82	35-550520	. . PIN,CONTROL ATTACHMENT.	2	
		/ATTACHING PARTS/		
- 83	102933S4ZJ0093	. . SPACER.	1	
	AN960-10	. . WASHER.	1	
	AN365-1032	. . NUT	1	
		----*----		
- 84	35-400461	. . TUBE ASSY,CABIN DOOR LATCH.	1	
- 85	35-400417	. . BOLT,CABIN DOOR LATCH	1	
		/ATTACHING PARTS/		
- 86	AN393-69	. . PIN	1	
		----*----		
- 87	35-400041	. . LINK,CABIN DOOR OUTSIDE HANDLE.	1	
		/ATTACHING PARTS/		
- 88	AN392-13	. . PIN	1	
	AN380-2-2	. . PIN,COTTER.	1	
	AN960-6	. . WASHER.	1	
	5171	. . WASHER,SPRING	AR	
		----*----		

FIG. & INDEX NO.	PART NO.	DESCRIPTION 1 2 3 4 5 6 7	UNITS PER ASSY	USABLE ON CODE
10 - 89	35-400414	. . GUIDE,CABIN DOOR LATCH BOLT . . . . . /ATTACHING PARTS/	1	
- 90	AN526-852-8	. . SCREW	2	
		----*----		
- 91	115155X10FT	. . SEAL,/SUPERCEDES 35-400320-54/.	1	
	35-400405-3	. . SEAL.	1	
- 92	35-400320-56	. . CLIP,CABIN DOOR LATCH . . . . . /ATTACHING PARTS/	1	
- 93	AN515-6-6	. . SCREW	1	1
	AN960-6	. . WASHER.	1	1
	AN365-632	. . NUT	1	1
		----*----		
- 94	35-410315	. . CLIP,MOULDING	16	1
- 95	AN665-21R	. . CLEVIS.	1	
- 96	95-420012-3	. . ROD ASSY,CABIN DOOR LOWER	1	
	50-400335-1	. PLACARD,CABIN DOOR LOCKING PROCEDURE.	1	8
	50-400336-1	. PLACARD,CABIN DOOR HANDLE	1	8
	35-400472	. PLACARD,CABIN DOOR HANDLE	1	9
	455-28	. HANDLE,DOOR CLOSING	1	2

CODE	EFFECTIVITY	CODE	EFFECTIVITY
1	TD-1 THRU TD-452	2	TD-453 THRU TD-485
3	TD-486 THRU TD-533	4	TD-1 THRU TD-185
5	TD-186 AND AFTER	6	TD-174 THRU TD-178
7	TD-179 AND AFTER	8	TD-1 THRU TD-533
9	TD-534 AND AFTER	10	TD-1 THRU TD-302
11	TD-1 THRU TD-177	12	TD-178 THRU TD-533
13	TD-690 AND AFTER	14	TD-1 THRU TD-689
15	TD-690 THRU TD-695	16	TD-696 AND AFTER
16	TD-534 THRU TD-707	17	TD-708 AND AFTER

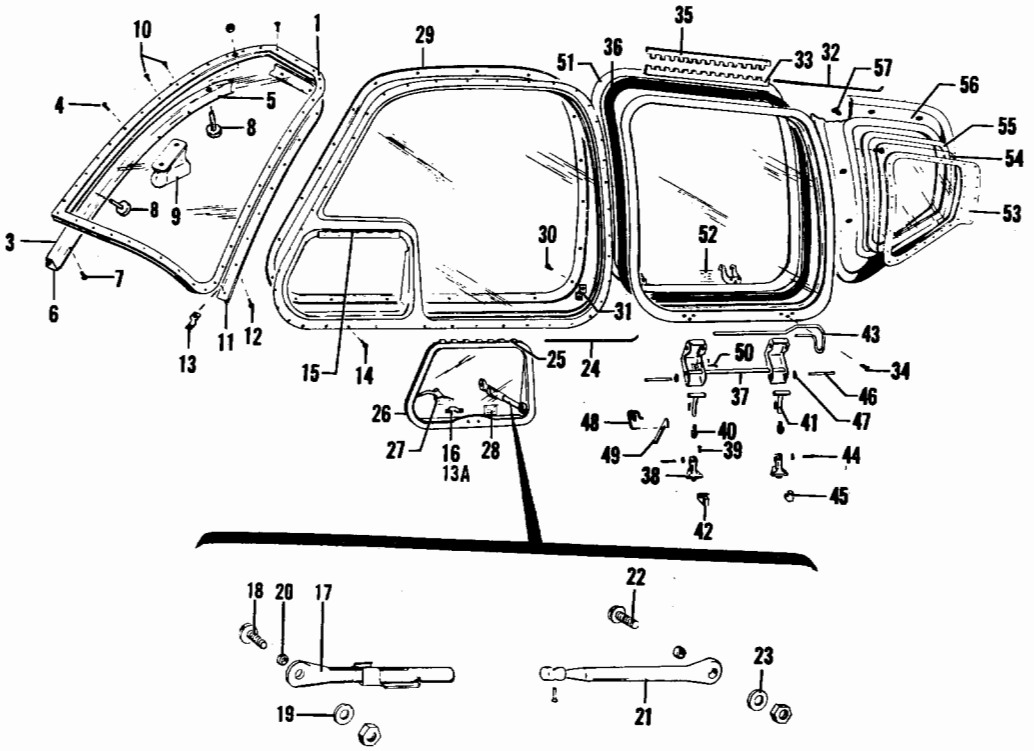

Figure 11. Cabin Windows And Windshield

FIG. & INDEX NO.	PART NO.	DESCRIPTION 1 2 3 4 5 6 7	UNITS PER ASSY	USABLE ON CODE
11 -	95-410032-1	WINDOW INSTL,CABIN /5/32 IN. WINDSHIELD/. . . . /WITH OPENABLE CENTER WINDOW/	NP	1
	95-410032-3	WINDOW INSTL,CABIN /1/4 IN. WINDSHIELD/ . . . . /WITH OPENABLE CENTER WINDOW/	NP	1
	95-410037-1	WINDOW INSTL,CABIN /5/32 IN. WINDSHIELD/. . . . /WITHOUT OPENABLE CENTER WINDOW/	NP	2
	95-410037-3	WINDOW INSTL,CABIN /1/4 IN. WINDSHIELD/ . . . . /WITHOUT OPENABLE CENTER WINDOW/	NP	2
	35-410291-199	WINDOW INSTL,CABIN /1/4 IN. ONE PIECE TINTED WINDSHIELD-SEE FIG. 11B FOR BREAKDOWN/ /WITH OPENABLE CENTER WINDOW/	NP	5
	35-410291-201	WINDOW INSTL,CABIN /1/4 IN. ONE PIECE CLEAR . . WINDSHIELD-SEE FIG. 11B FOR BREAKDOWN/ /WITH OPENABLE CENTER WINDOW/	NP	5
	35-410291-203	WINDOW INSTL,CABIN /1/4 IN. ONE PIECE TINTED. . WINDSHIELD-SEE FIG. 11C FOR BREAKDOWN/	NP	12
	35-410291-205	WINDOW INSTL,CABIN /1/4 IN. ONE PIECE CLEAR . . WINDSHIELD-SEE FIG. 11C FOR BREAKDOWN/	NP	12
- 1	¤35-410291-8	. WINDSHIELD ASSY,LH /5/32 IN. CLEAR GLASS/ . .	1	1
	¤35-410291-164	. WINDSHIELD ASSY,LH /1/4 IN. CLEAR GLASS/. . .	1	1
	¤35-410291-11	. WINDSHIELD ASSY,RH /5/32 IN. CLEAR GLASS/ . .	1	1
	¤35-410291-165	. WINDSHIELD ASSY,RH /1/4 IN. CLEAR GLASS/. . .	1	1
- 2		. DELETED		
- 3	¤35-410291-44	. SECTION,WINDSHIELD JOINT HAT. . . . . /ATTACHING PARTS/	1	1
- 4	¤AN507-632R7	. SCREW	12	
	¤MS20365-632	. NUT	12	

----*----

FIG. & INDEX NO.	PART NO.	DESCRIPTION 1 2 3 4 5 6 7	UNITS PER ASSY	USABLE ON CODE
11 - 5	¤35-410291-46	. MOULDING,WINDSHIELD UPPER CENTER.	1	1
- 6	¤35-410291-108	. MOULDING,WINDSHIELD LOWER CENTER.	1	7
	¤35-410291-170	. MOULDING,WINDSHIELD LOWER CENTER.	1	8
		/ATTACHING PARTS/		
- 7	¤PK84XA4-4	. SCREW	10	
		----*----		
- 8	¤35-380019-1	. INDICATOR,AIR TEMP /SUPERSEDES 2716 AND . . .	1	7
		35-380019/		
	¤35-380019-3	. INDICATOR,AIR TEMP /LOCATED BELOW COMPASS/. .	1	8
		/ATTACHING PARTS/		
	¤35-410291-183	. SPACER /OUTSIDE OF WINDSHIELD/.	1	8
	¤35-410291-185	. SPACER /INSIDE OF WINDSHIELD/	1	8
	35-410291-187	. WASHER /OUTSIDE OF WINDSHIELD/.	1	8
		----*----		
- 9	¤C2400L4VF95	. COMPASS ASSY.	1	3
	¤C2400L4VT95	. COMPASS ASSY.	1	4
		/ATTACHING PARTS/		
- 10	AN515B8R8	. SCREW	2	
		----*----		
- 11	¤35-410291-80	. MOULDING,WINDSHIELD LH.	1	1
	¤35-410291-81	. MOULDING,WINDSHIELD RH.	1	1
		/ATTACHING PARTS/		
- 12	¤PK84XA4-4	. SCREW	7	
		----*----		
- 13	¤35-410315	. CLIP,MOULDING	7	1
- 13A	¤35-410465-1	. STRIKE,STORM WINDOW LATCH	1	10
		/ATTACHING PARTS/		
	AN507-4	. SCREW	2	
	¤MS20365-440	. NUT	2	
		----*----		
-	¤35-410291-628	. WINDOW ASSY,CABIN FWD LH.	1	9
	35-410291-652	. WINDOW ASSY,CABIN FWD LH.	1	10
		/ATTACHING PARTS/		
- 14	¤AN507-632R6	. SCREW	56	
	¤MS20365-632	. NUT /SUPERSEDES AN365-632/.	56	
		----*----		
- 15	¤35-410291-88	. . HINGE,WINDOW FRAME HALF	1	
- 16	¤35-410318	. . STRIKE,STORM WINDOW LATCH	1	9
- 17	¤35-410324	. . SLEEVE ASSY,STORM WINDOW STOP	1	
		/ATTACHING PARTS/		
- 18	AN526-832R7	. . SCREW	1	
- 19	¤102933S4ZP0159	. . SPACER.	1	
- 20	¤100801X2-0062	. . BUSHING	1	
	¤AN960-8L	. . WASHER.	1	
	¤102809A093-011	. . PIN	1	
		----*----		
- 21	¤35-410325	. . ROD,STORM WINDOW.	1	
		/ATTACHING PARTS/		
- 22	AN526-832R7	. . SCREW	1	
	¤102933S4ZP0140	. . SPACER.	1	
- 23	¤100801X2-0097	. . BUSHING	1	
	¤AN960-8L	. . WASHER.	1	
		----*----		
	¤35-410291-626	. WINDOW ASSY,STORM	1	9
	¤35-410291-650	. WINDOW ASSY,STORM	1	10
		/ATTACHING PARTS/		
- 24	¤105774C-ZA00808	. PIN,HINGE	1	
		----*----		
- 25	¤35-410291-90	. . HINGE,STORM WINDOW HALF	1	
- 26	¤130400	. . SEAL,STORM WINDOW /11 FT LONG/.	1	
		/SUPERSEDES 35-410291-112 & 4172355/		
- 27	¤35-410321-1	. . LATCH ASSY,STORM WINDOW	1	
		/SUPERSEDES 35-410321/		
- 28	¤35-410326	. . PLACARD,STORM WINDOW INSTRUCTION.	1	

FIG. & INDEX NO.	PART NO.	DESCRIPTION 1 2 3 4 5 6 7	UNITS PER ASSY	USABLE ON CODE
11 - 29	¤35-410291-175	. MOULDING,CABIN WINDOW FWD LH.	1	
		/SUPERSEDES 35-410291-76/		
		/ATTACHING PARTS/		
- 30	¤PK84XA4-4	. SCREW	19	
		----*----		
- 31	¤35-410315	. CLIP,WINDOW MOULDING.	19	
	¤35-410291-146	. WINDOW ASSY,CABIN CENTER LH /TINTED/.	1	
		/OPENABLE/		
	35-410291-147	. WINDOW ASSY,CABIN CENTER RH /TINTED/.	1	
		/OPENABLE/		
		/ATTACHING PARTS/		
- 32	¤35-410291-52	. PIN,HINGE	1	
		----*----		
- 33	¤35-410291-18U	. . HINGE,CABIN WINDOW HALF	1	
	¤35-400298	. . SUPPORT,WINDOW LATCH MECHANISM.	2	
		/ATTACHING PARTS/		
- 34	¤AN507-832R9	. . SCREW	3	
	¤MS20364-832	. . NUT /SUPERSEDES AN364-832/.	3	
		----*----		
	33-410010-1	. GLASS,CENTER WINDOW LH /FIXED/.	1	2
	¤33-410010-2	. GLASS,CENTER WINDOW RH /FIXED/.	1	2
	33-410010-3	. FRAME,CENTER WINDOW OUTSIDE LH /FIXED/. . . .	1	2
	33-410010-4	. FRAME,CENTER WINDOW OUTSIDE RH /FIXED/. . . .	1	2
- 35	¤35-410291-98	. HINGE,CABIN WINDOW HALF	2	
- 36	¤S152X84	. SEAL,CABIN WINDOW	2	
- 37	35-415312-3	. HANDLE ASSY,LH.	1	
	35-415312-4	. HANDLE ASSY,RH.	1	
- 38	¤35-534061	. SUPPORT,WINDOW LATCH MECHANISM.	4	
		/ATTACHING PARTS/		
- 39	AN507-832-8	. SCREW	3	
		----*----		
- 40	¤35-534064	. LINK,CABIN WINDOW ADJUSTING	4	
- 41	¤35-534057-8	. LINK ASSY,CABIN WINDOW INNER.	4	
- 42	¤35-415309-1	. CATCH ASSY,CABIN WINDOW LH.	1	
	¤35-415309-2	. CATCH ASSY,CABIN WINDOW RH.	1	
- 43	¤35-410316	. PIN,CABIN WINDOW RELEASE LH	1	
	¤35-410316-1	. PIN,CABIN WINDOW RELEASE RH	1	
- 44	¤35-534063	. PIN,CABIN WINDOW MECHANISM.	4	
	¤MS24665-132	. PIN,COTTER.	4	
- 45	¤35-410323	. CLIP,CABIN WINDOW RETAINER.	2	
- 46	¤35-410317	. PIN,CABIN WINDOW CATCH.	4	
- 47	NAS51-18N	. RING.	4	
- 48	¤35-415310-1	. SPRING,CABIN WINDOW LATCH LH.	1	
	¤35-415310-2	. SPRING,CABIN WINDOW LATCH RH.	1	
- 49	¤35-415311-1	. LATCH,CABIN WINDOW.	2	
		/SUPERSEDES 35-415311/		
- 50	¤AN392-13	. PIN	2	
	¤MS24665-130	. PIN,COTTER.	2	
- 51	¤35-410291-72	. MOULDING,CABIN CENTER LH.	1	
	¤35-410291-73	. MOULDING,CABIN CENTER RH.	1	
- 52	¤35-410329 B-C	. PLACARD	2	
	¤35-410329 W-C	. PLACARD /WHITE ON CLEAR/.	2	
- 53	¤35-410000-94	FRAME,CABIN WINDOW REAR LH.	1	
	¤35-410000-95	FRAME,CABIN WINDOW REAR RH.	1	
- 54	¤35-410000-98	PANE,CABIN WINDOW REAR LH	1	
	¤35-410000-99	PANE,CABIN WINDOW REAR RH	1	
- 55	¤35-410000-92	FRAME,CABIN WINDOW REAR LH.	1	
	¤35-410000-93	FRAME,CABIN WINDOW REAR RH.	1	

FIG. & INDEX NO.	PART NO.	DESCRIPTION 1 2 3 4 5 6 7	UNITS PER ASSY	USABLE ON CODE
11 - 56	¤35-410000-96	MOULDING,CABIN WINDOW REAR LH	1	3
	95-420015-67	MOULDING,CABIN WINDOW REAR LH	1	11
	¤35-410000-97	MOULDING,CABIN WINDOW REAR RH	1	3
	¤95-420015-68	MOULDING,CABIN WINDOW REAR RH	1	11
		/ATTACHING PARTS/		
- 57	¤NAS384-6-6P	SCREW	7	
	¤NAS391-6P	WASHER.	7	
		----*----		

CODE	EFFECTIVITY	CODE	EFFECTIVITY
1	TD-1 THRU TD-637	2	TD-453 THRU TD-533
3	TD-1 THRU TD-302	4	TD-303 THRU TD-637
5	TD-638 THRU TD-707	6	DELETED
7	TD-1 THRU TD-566	8	TD-567 THRU TD-637
9	TD-1 THRU TD-533	10	TD-534 AND AFTER
11	TD-303 THRU TD-452	12	TD-708 AND AFTER

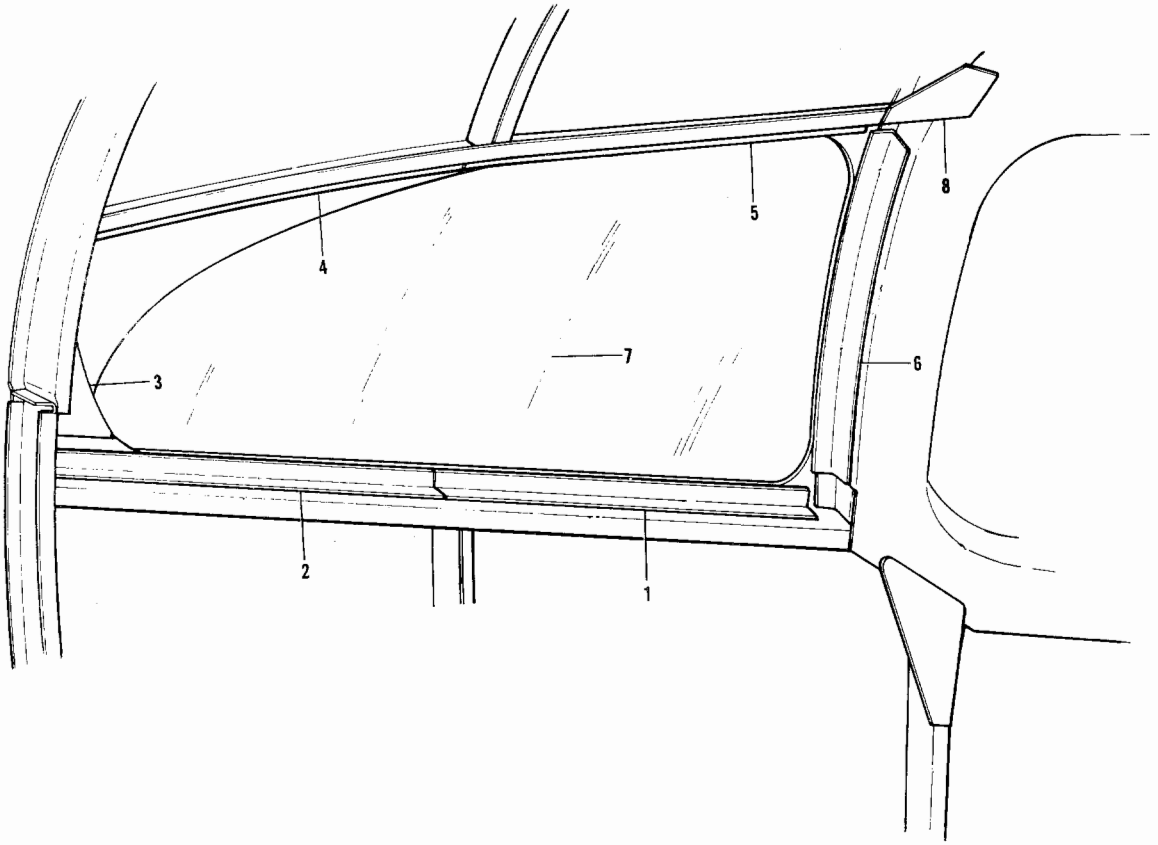

Figure 11A. Aft Cabin Window (TD-453 & after)

FIG. & INDEX NO.	PART NO.	DESCRIPTION 1 2 3 4 5 6 7	UNITS PER ASSY	USABLE ON CODE
		WINDOW INSTL,AFT.		1
11A- 1	96-430010-23	. ANGLE,LH WINDOW FRAME LOWER	1	1
	96-430010-24	. ANGLE,RH WINDOW FRAME LOWER	1	1
		/ATTACHING PARTS/		
	AN530-8	. SCREW	AR	
		----*----		
- 2	96-430010-17	. ANGLE,LH WINDOW FRAME LOWER	1	1
	96-430010-18	. ANGLE,RH WINDOW FRAME LOWER	1	1
		/ATTACHING PARTS/		
	AN530-8	. SCREW	AR	
		----*----		
- 3	96-430010-15	. ANGLE,LH WINDOW FRAME AFT	1	1
	96-430010-16	. ANGLE,RH WINDOW FRAME AFT	1	1
		/ATTACHING PARTS/		
	AN530-8	. SCREW	AR	
		----*----		
- 4	96-430010-21	. ANGLE,LH WINDOW FRAME UPPER	1	1
	96-430010-22	. ANGLE,RH WINDOW FRAME UPPER	1	1
		/ATTACHING PARTS/		
	AN530-8	. SCREW	AR	
		----*----		

FIG. & INDEX NO.	PART NO.	DESCRIPTION 1 2 3 4 5 6 7	UNITS PER ASSY	USABLE ON CODE
11A- 5	96-430010-29	• ANGLE,LH WINDOW FRAME UPPER	1	1
	96-430010-30	• ANGLE,RH WINDOW FRAME UPPER	1	1
		/ATTACHING PARTS/		
	AN530-8	• SCREW	AR	
		----*----		
- 6	96-430010-27	• ANGLE,LH WINDOW FRAME FWD	1	1
	96-430010-28	• ANGLE,RH WINDOW FRAME FWD	1	1
		/ATTACHING PARTS/		
	AN530-8	• SCREW	AR	
		----*----		
- 7	96-430010-11	• GLASS,LH AFT WINDOW	1	1
	96-430010-12	• GLASS,RH AFT WINDOW	1	1
- 8	96-430010-53	• GUSSET,AFT WINDOW	1	1

CODE EFFECTIVITY

1 TD-453 AND AFTER

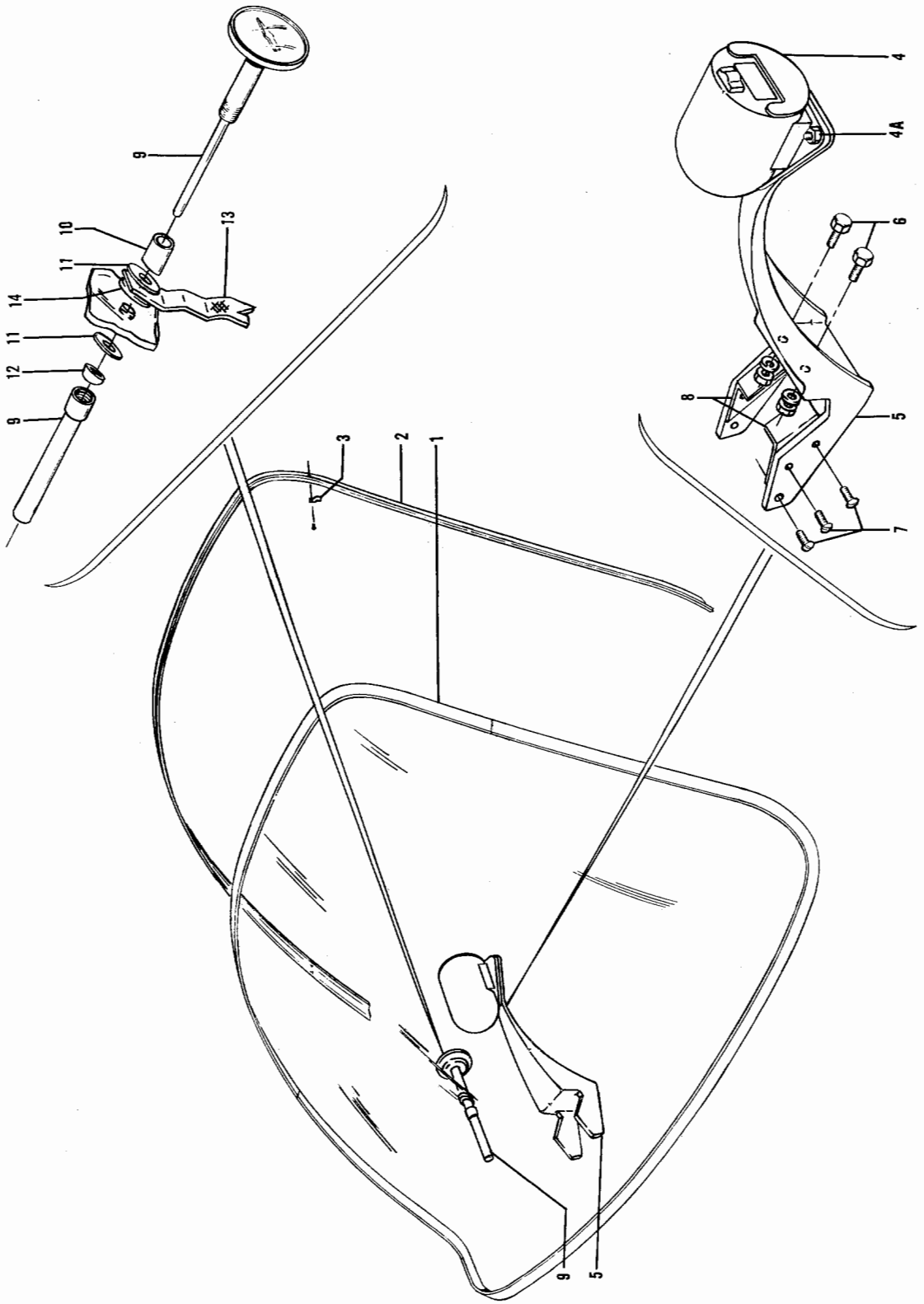

Figure 11B. One Piece Windshield (TD-638 thru TD-708)

FIG. & INDEX NO.	PART NO.	DESCRIPTION 1 2 3 4 5 6 7	UNITS PER ASSY	USABLE ON CODE
11B-	35-410474-41	WINDSHIELD INSTL,ONE PIECE /CLEAR/.	NP	1
	35-410474-39	WINDSHIELD INSTL,ONE PIECE /TINTED/	NP	1
- 1	35-410474-31	. WINDSHIELD ASSY,ONE PIECE /CLEAR/	1	1
	¤35-410474-29	. WINDSHIELD ASSY,ONE PIECE /TINTED/.	1	1
	35-410474-59	. WINDSHIELD ASSY,ONE PIECE /CLEAR/	1	1
	¤35-410474-57	. WINDSHIELD ASSY,ONE PIECE /TINTED/.	1	1
- 2	35-410474-49	. MOULDING,WINDSHIELD LH.	1	1
	35-410474-50	. MOULDING,WINDSHIELD RH.	1	1
		/ATTACHING PARTS/		
	¤AN507-632R7	. SCREW	AR	
		----*----		
- 3	¤35-410315	. CLIP,MOULDING	14	1
		/ATTACHING PARTS/		
	¤PK84XA4-4	. SCREW	14	
		----*----		
- 4	C2400L4P1A	. COMPASS ASSY.	1	2
		/ATTACHING PARTS/		
- 4A	AN515B8-7	. SCREW	3	
	AN936A8B	. WASHER.	3	
	AN340B8	. NUT	3	
		----*----		
- 5	¤35-410476-1	. BRACKET,COMPASS	1	2
		/ATTACHING PARTS/		
- 6	¤AN3-3A/M/	. BOLT.	2	
	¤130006A1032	. NUT,ANCHOR.	2	
- 7	MS27039-0810	. SCREW	6	
	¤AN960-8	. WASHER.	6	
	¤MS20365-832	. NUT	6	
		----*----		
- 8	35-410474-55	. CLIP,COMPASS BRACKET LH	1	2
	35-410474-56	. CLIP,COMPASS BRACKET RH	1	2
- 9	¤35-380019-3	. INDICATOR,OUTSIDE AIR TEMPERATURE	1	1
- 10	¤35-410474-53	. SPACER.	1	1
- 11	35-410291-187	. WASHER.	2	1
- 12	¤35-410291-183	. SPACER.	1	1
- 13	¤35-410474-65	. TAPE,METAL /FOR OUTSIDE AIR TEMP/	1	3
- 14	35-410474-67	. WASHER /FOR OUTSIDE AIR TEMP/	1	3

CODE	EFFECTIVITY	CODE	EFFECTIVITY
1	TD-638 THRU TC-707	2	TD-638 THRU TD-646
3	TD-662 THRU TD-707		

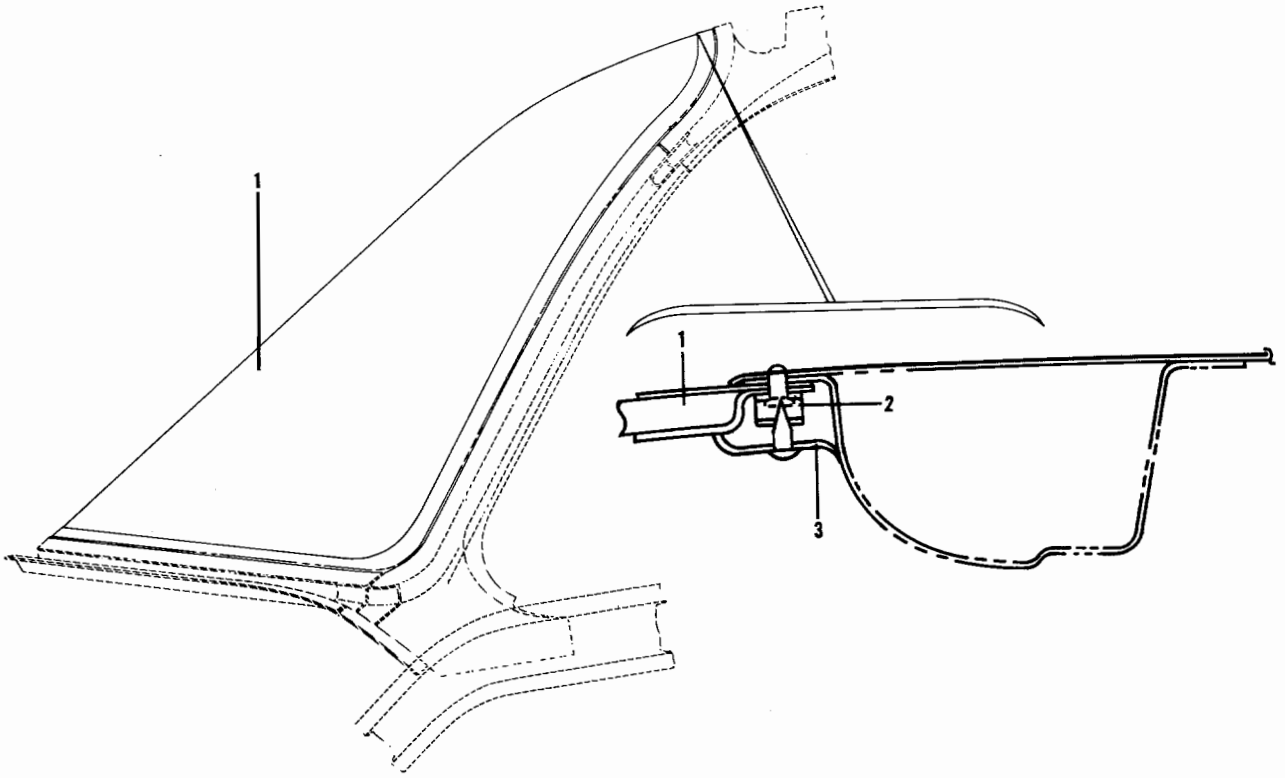

Figure 11C. One Piece Windshield (TD-708 And After)

FIG. & INDEX NO.	PART NO.	DESCRIPTION 1 2 3 4 5 6 7	UNITS PER ASSY	USABLE ON CODE
11C	96-420030-1	WINDSHIELD INSTL,ONE PIECE TINTED	NP	1
	96-420030-3	WINDSHIELD INSTL,ONE PIECE CLEAR.	NP	1
- 1	96-420029-1	. WINDSHIELD ASSY /TINTED/.	1	1
	96-420029-3	. WINDSHIELD ASSY /CLEAR/	1	1
- 2	¤35-410315	. CLIP.	15	1
- 3	¤35-410474-49	. MOULDING.	1	1
	¤35-410474-50	. MOULDING.	1	1
		/ATTACHING PARTS/		
	¤PK84XA4-4	. SCREW	15	
		----*----		
	#576 PRESSTITE	. SEALER.		1

CODE EFFECTIVITY

1 TD-708 AND AFTER

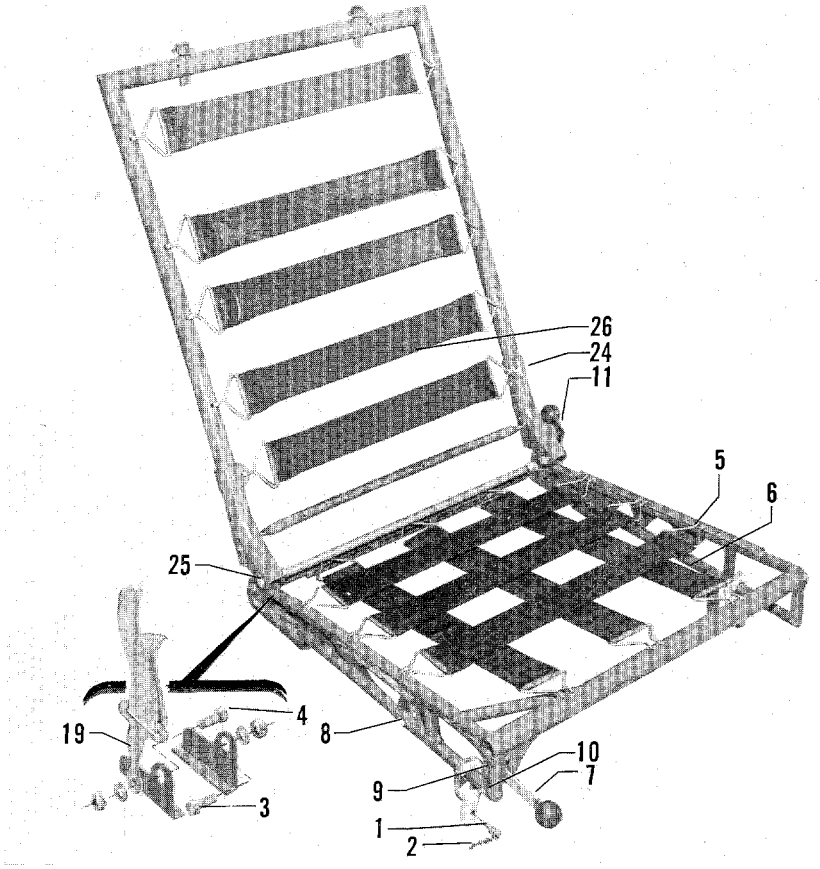

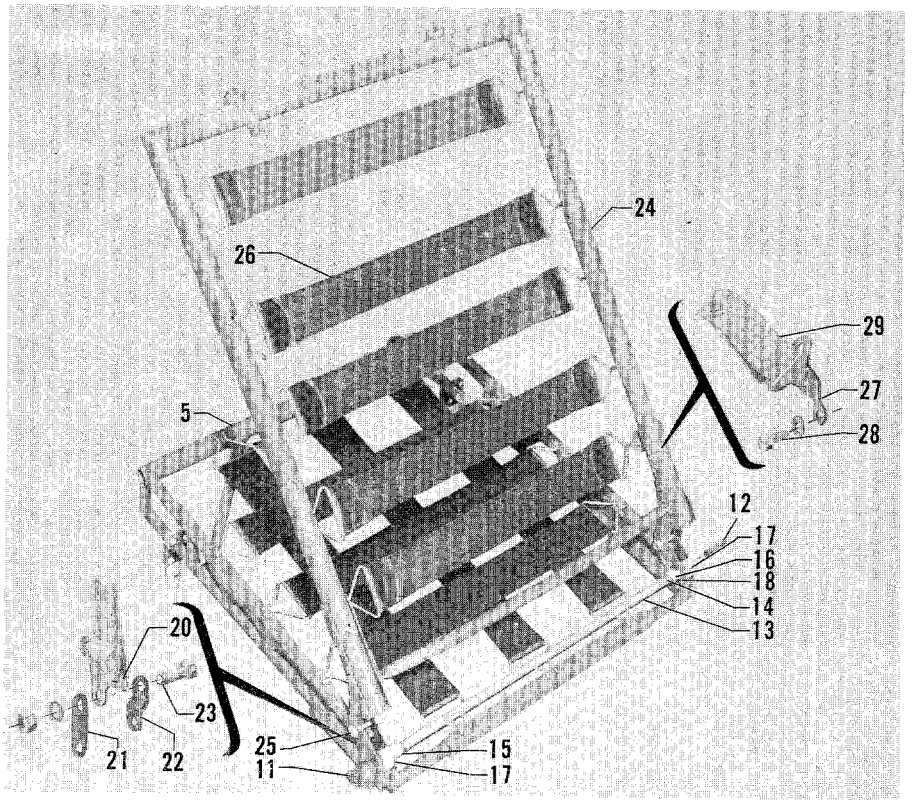

Figure 12. Front Seat (TD-1 thru TD-302)

FIG. & INDEX NO.	PART NO.	DESCRIPTION 1 2 3 4 5 6 7	UNITS PER ASSY	USABLE ON CODE
		SEAT INSTL,SLIDING DIVIDED FRONT.		1
12	35-534369-1	. SEAT ASSY,FRONT LH.	1	1
	35-534369-2	. SEAT ASSY,FRONT RH.	1	1
		/ATTACHING PARTS/		
- 1	2178	. PIN,BALL-LOK.	2	
	50019	. PIN,PIP /ALTERNATE FOR 2178/.	2	
- 2	109615-2-021	. CHAIN	2	
- 3	35-534368-2	. BOLT.	2	
- 4	35-534368-4	. BOLT.	2	
	AN960-416	. WASHER.	1	
	AN960-416L	. WASHER.	4	
	NAS43-4-12	. SPACER.	1	
	AN364-428	. NUT	4	
		----*----		
	35-534369-601	. . SEAT ASSY,BOTTOM LH /SPARE ASSY,.	1	1
		SEE SECTION 4 FOR COMPONENTS/		
	35-534369-602	. . SEAT ASSY,BOTTOM RH /SPARE ASSY,.	1	1
		SEE SECTION 4 FOR COMPONENTS/		
- 5		. . SEAT ASSY,BOTTOM.		1
- 6	900-2	. . STRAP ASSY.	6	1
- 7	35-534369-29	. . LEVER ASSY,SEAT ADJUST.	1	1
		/ATTACHING PARTS/		
- 8	AN526-10-16	. . SCREW	1	
	AN960-10L	. . WASHER.	2	
	102933S4ZJ0156	. . SPACER.	1	
	AN364-1032	. . NUT	1	
		----*----		
- 9	100942X0120-8	. . . SPRING.	1	1
		/ATTACHING PARTS/		
- 10	AN392-21	. . . PIN,FLATHEAD.	1	
	AN960-4	. . . WASHER.	1	
	AN381-2-6	. . . PIN,COTTER.	1	
		----*----		
	35-534370-1	. . LEVER ASSY,ADJUSTING DIVIDED FWD SEAT LH. .	1	1
- 11	35-534370-2	. . LEVER ASSY,ADJUSTING DIVIDED FWD SEAT RH. .	1	1
	35-534335-3	. . ROD,SEAT ADJUSTING OUTBD LH	1	1
- 12	35-534335-4	. . ROD,SEAT ADJUSTING OUTBD RH	1	1
	35-534334-3	. . TUBE,ADJUSTMENT ATTACHING LH.	1	1
- 13	35-534334-4	. . TUBE,ADJUSTMENT ATTACHING RH.	1	1
		/ATTACHING PARTS/		
- 14	59-022-094-0437	. . PIN,ROLL.	4	
		----*----		
- 15	35-534369-47	. . SPRING.	1	1
- 16	35-534369-48	. . SPRING.	1	1
- 17	35-534367	. . CAM,SEAT ADJUST	2	1
		/ATTACHING PARTS/		
	59-028-125-0265	. . PIN,ROLL.	1	
		----*----		
- 18	AN392-23	. . . PIN,FLATHEAD.	1	1
	AN381-2-6	. . . PIN,COTTER.	1	1
- 19	113677	. . FITTING,SAFETY BELT OUTBD	1	1
- 20	113676-4	. . FITTING,SAFETY BELT INBD.	1	1
- 21	35-050084-21	. . LINK.	1	1
- 22	35-050084-23	. . LINK.	1	1
		/ATTACHING PARTS/		
- 23	NAS222-9	. . BOLT.	1	
	AN960-416L	. . WASHER.	1	
	NAS43-4-10	. . SPACER.	1	
	AN364-428	. . NUT	1	
		----*----		

FIG. & INDEX NO.	PART NO.	DESCRIPTION 1 2 3 4 5 6 7	UNITS PER ASSY	USABLE ON CODE
12 - 24	35-534361-32	. . BACK ASSY,FRONT SEAT. . . . . /ATTACHING PARTS/	1	1
- 25	AN4-11A	. . BOLT.	2	
	AN960-416	. . WASHER.	4	
	AN364-428	. . NUT	2	
		----*----		
- 26	900-2	. . STRAP ASSY.	5	1
- 27	35-534361-38	. . FITTING,SAFETY BELT . . . . . /ATTACHING PARTS/	2	1
- 28	AN4-5A	. . BOLT.	2	
	AN936B416	. . WASHER.	2	
		----*----		
- 29	50-534269-13	. . HARNESS ASSY,SAFETY ONE PASSENGER	1	1
	50-534269-23	. . WEBBING ASSY.	2	1

CODE EFFECTIVITY

1 TD-1 THRU TD-302

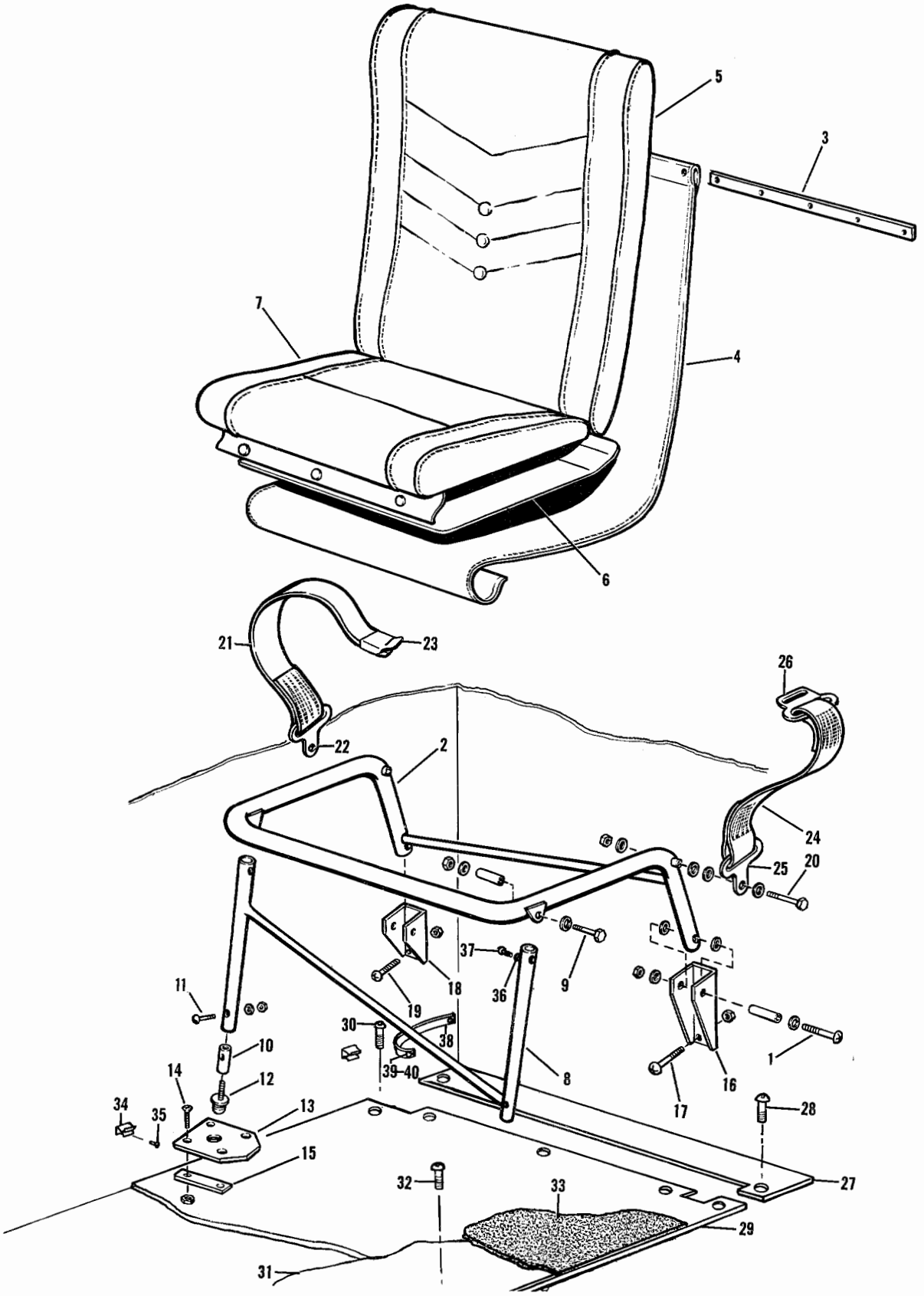

Figure 12A. Jump Seat (TD-1 thru TD-302)

FIG. & INDEX NO.	PART NO.	DESCRIPTION 1 2 3 4 5 6 7	UNITS PER ASSY	USABLE ON CODE
		SEAT INSTL,JUMP /OPTIONAL/		1
12A-	95-534015	SEAT ASSY,JUMP	1	1
		/ATTACHING PARTS/		
- 1	NAS222	SCREW	2	
	100696ZP109	SPACER	2	
	AN960-416	WASHER	4	
	AN960-616	WASHER	4	
	MS20364-428	NUT	2	
		----*----		
- 2	95-534015-1	WELD ASSY,JUMP SEAT	1	1
- 3	95-534015-25	STRIP,JUMP SEAT	1	1
- 4	95-534015-23	HAMMOCK,NYLON	1	1
- 5	95-534015-19	CUSHION,JUMP SEAT BACK	1	1
- 6	95-534015-27	PAN,BOTTOM CUSHION	1	1
- 7	95-534015-21	CUSHION,JUMP SEAT BOTTOM	1	1
- 8	95-534015-15	WELD ASSY,JUMP SEAT	1	1
		/ATTACHING PARTS/		
- 9	AN3	BOLT	2	
	100696X-ZC021	SPACER	2	
	AN960-10L	WASHER	4	
	MS20365-1032	NUT	2	
		----*----		
- 10	95-534015-17	PLUG,JUMP SEAT	2	1
		/ATTACHING PARTS/		
- 11	AN525-10-16	SCREW	1	
	AN960-10	WASHER	1	
	MS20365-1032	NUT	1	
		----*----		
- 12	295460-3-5	STUD,JUMP SEAT	2	1
- 13	295300	WEDJIT,JUMP SEAT	2	1
		/ATTACHING PARTS/		
- 14	AN509-10R	SCREW	4	
		----*----		
- 15	95-534014-27	SPACER	4	1
- 16	95-534014-7	CHANNEL,JUMP SEAT	1	1
		/ATTACHING PARTS/		
- 17	NAS221	SCREW	4	
	MS20364-1032	NUT	4	
		----*----		
- 18	95-534014-5	CHANNEL,JUMP SEAT	1	1
		/ATTACHING PARTS/		
- 19	NAS221	SCREW	4	
	MS20364-1032	NUT	4	
		----*----		
	102933D5ZM0190	SPACER /SEE FIG. 13A/	2	1
		/USED WITH BREAKOVER SEAT BACK ASSY/		
	95-534014-53	BELT ASSY,QUICK RELEASE SAFETY	1	1
		/ATTACHING PARTS/		
- 20	AN4	BOLT	2	
	AN960-416L	WASHER	2	
	AN960-616	WASHER	2	
	MS20365-428	NUT	2	
		----*----		
	414-183389-5	STRAP ASSY,SAFETY BELT	1	1
	414-183389-1	STRAP ASSY,SAFETY BELT	1	1
- 21	FD161	WEBBING	1	1
- 22	113676-4	FITTING,SAFETY BELT	1	1
	113642	PLACARD,SAFETY BELT	1	1
- 23	FDA1645	BUCKLE	1	1
	414-183389-3	STRAP ASSY,SAFETY BELT	1	1
- 24	FD161	WEBBING	1	1
- 25	113676-4	FITTING,SAFETY BELT	1	1
	113642	PLACARD,SAFETY BELT	1	1
- 26	FD1643	BAR,RELEASE	1	1

FIG. & INDEX NO.	PART NO.	DESCRIPTION 1 2 3 4 5 6 7	UNITS PER ASSY	USABLE ON CODE
12A- 27	95-534014-35	FLOORBOARD,JUMP SEAT	1	1
		/ATTACHING PARTS/		
- 28	NAS384-6	SCREW	2	
	COMM	WASHER,NUMBER 6 FINISH	2	
	A1784-6Z1	NUT	2	
		----*----		
- 29	95-534014-37	FLOORBOARD,JUMP SEAT	1	1
		/ATTACHING PARTS/		
- 30	NAS384-6	SCREW	5	
	COMM	WASHER,NUMBER 6 FINISH	5	
	A1784-6Z1	NUT	5	
		----*----		
- 31	95-534014-55	REINFORCEMENT,FLOORBOARD	1	1
		/ATTACHING PARTS/		
- 32	NAS384-6-12P	SCREW	2	
	COMM	WASHER,NUMBER 6 FINISH	2	
	A1784-6Z	NUT	2	
		----*----		
- 33	95-534014-39	CARPET,JUMP SEAT	1	1
	95-534014-75	STRAP,STEEL /SEE FIG. 13A/	1	1
		/USED WITH BREAKOVER SEAT BACK ASSY/		
	35-534304-127	HEADREST,LH /SEE FIG. 13A/	1	1
		/USED WITH BREAKOVER SEAT BACK ASSY/		
	35-534360-79	FRAME,HEADREST LH /SEE FIG. 13A/	1	1
		/USED WITH BREAKOVER SEAT BACK ASSY/		
- 34	129002	CLIP,TOW BAR	2	1
		/ATTACHING PARTS/		
- 35	AN515-632	SCREW	2	
	AN936B6	WASHER,LOCK	2	
		----*----		
	95-534014-59	PANEL ASSY,BAGGAGE DOOR /SEE FIG. 9/	1	1
	95-534016	BACK ASSY,BREAKOVER REAR SEAT LH	1	1
		/SEE FIG. 13A/		
	95-534016-1	BACK ASSY,BREAKOVER REAR SEAT RH	1	1
		/SEE FIG. 13A/		
	35-534377-45	SUPPORT ASSY,ARMREST /SEE FIG. 13A/	1	1
- 36	AN227-8B	STUD,SNAP FASTENER	1	1
		/ATTACHING PARTS/		
- 37	NAS384-6-6P	SCREW	1	
		----*----		
- 38	95-534014-61	STRAP,STORAGE POSITION	1	1
- 39	AN227-7B	SOCKET,SNAP FASTENER	1	1
- 40	AN227-6P	BUTTON,SNAP FASTENER	1	1

CODE EFFECTIVITY

1 TD-1 THRU TD-302

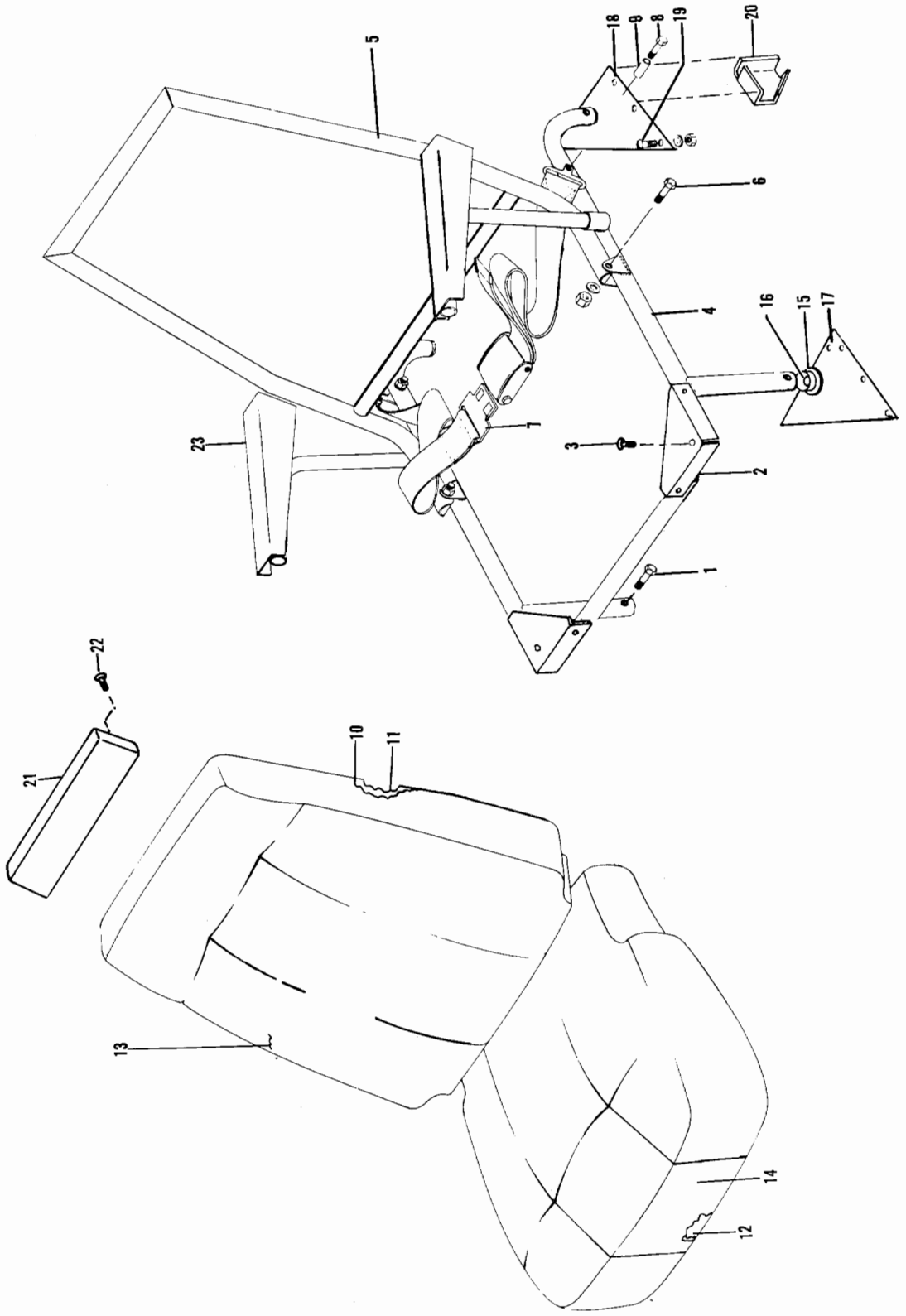

Figure 12B. Fifth Seat (TD-303 & After)

FIG. & INDEX NO.	PART NO.	DESCRIPTION 1 2 3 4 5 6 7	UNITS PER ASSY	USABLE ON CODE
12B-	95-534022-616	SEAT ASSY,FIFTH	1	1
	95-534022-619	SEAT ASSY,FIFTH	1	2
		/ATTACHING PARTS/		
- 1	AN525-10-16	SCREW	4	
	AN960-10	WASHER	4	
	MS20365-1032	NUT	4	
		----*----		
- 2	95-534022-91	BRACKET	2	3
		/ATTACHING PARTS/		
- 3	AN530-6R4	SCREW	3	
		----*----		
- 4	95-534022-21	WELD ASSY,SEAT BOTTOM	1	4
- 5	95-534022-615	WELD ASSY,SEAT BACK	1	4
		/ATTACHING PARTS/		
- 6	AN3A	BOLT	2	
	AN960-10L	WASHER	2	
	AN365-1032	NUT	2	
		----*----		
- 7	95-534017-35	BELT ASSY,SEAT	1	5
	FDC-2500-37-2	BELT ASSY,SEAT	1	3
	FDC-2700-105	BELT ASSY,SEAT	1	2
		/ATTACHING PARTS/		
- 8	AN4-5A	BOLT	2	
- 9	102933D5ZM0190	SPACER	2	
	AN960-416L	WASHER	2	
	AN365-428	NUT	2	
		----*----		
- 10	96-534010-601	UPHOLSTERY ASSY,SEAT BACK /BLUE/	1	1
	96-534010-602	UPHOLSTERY ASSY,SEAT BACK /GRAY/	1	1
	96-534010-603	UPHOLSTERY ASSY,SEAT BACK /BEIGE/	1	1
	96-534010-604	UPHOLSTERY ASSY,SEAT BACK /GREEN/	1	1
	95-534022-95	UPHOLSTERY ASSY,SEAT BACK	1	2
- 11	95-534022-69	CUSHION,SEAT BACK	1	5
	18-534020-3	PAD,BACKING	1	3
	96-534016-3	FOAM	1	3
	95-534022-73	CUSHION,SEAT BOTTOM	1	5
- 12	96-534027	CUSHION,SEAT BOTTOM	1	3
	95-534041-29	CUSHION,SEAT BOTTOM	1	2
- 13	96-534013-17	PANEL,UPHOLSTERY /OPTIONAL COLOR/	1	3
- 14	96-534013-19	PANEL,UPHOLSTERY /OPTIONAL COLOR/	1	3
	95-534022-59	WELD ASSY,SEAT ATTACH	4	7
- 15	95-534022-65	WELD ASSY,SEAT ATTACH	4	8
		/ATTACHING PARTS/		
- 16	AN6	BOLT	1	
		----*----		
- 17	95-534022-623	PLATE ASSY,FWD LH	1	4
	95-534022-603	PLATE ASSY,FWD RH	1	4
- 18	95-534022-45	PLATE,AFT LH	1	4
	95-534022-605	PLATE ASSY,AFT RH	1	4
		/ATTACHING PARTS/		
- 19	NAS221	SCREW	6	
	AN960-10L	WASHER	6	
	AN365-1032	NUT	6	
		----*----		
- 20	95-534022-47	BRACKET	1	4
- 21	96-530001-615	HEADREST ASSY	1	4
		/ATTACHING PARTS/		
- 22	PK76XZ-6-6	SCREW	2	
	A1784-6Z-1	NUT	2	
		----*----		

FIG. & INDEX NO.	PART NO.	DESCRIPTION 1 2 3 4 5 6 7	UNITS PER ASSY	USABLE ON CODE
12B-	95-534022-617	ARMREST ASSY,LH	1	5
	95-534022-667	ARMREST ASSY,LH	1	6
	95-534022-618	ARMREST ASSY,RH	1	5
	95-534022-668	ARMREST ASSY,RH	1	6
	95-534030-3	FRAME,LH	1	5
- 23	95-534030-15	FRAME ASSY,LH	1	6
	95-534030-4	FRAME,RH	1	5
	95-534030-16	FRAME ASSY,RH	1	6

CODE	EFFECTIVITY	CODE	EFFECTIVITY
1	TD-303 THRU TD-533	2	TD-534 AND AFTER
3	TD-453 THRU TD-533	4	TD-303 AND AFTER
5	TD-303 THRU TD-452	6	TD-453 AND AFTER
7	TD-1 THRU TD-444	8	TD-445 AND AFTER

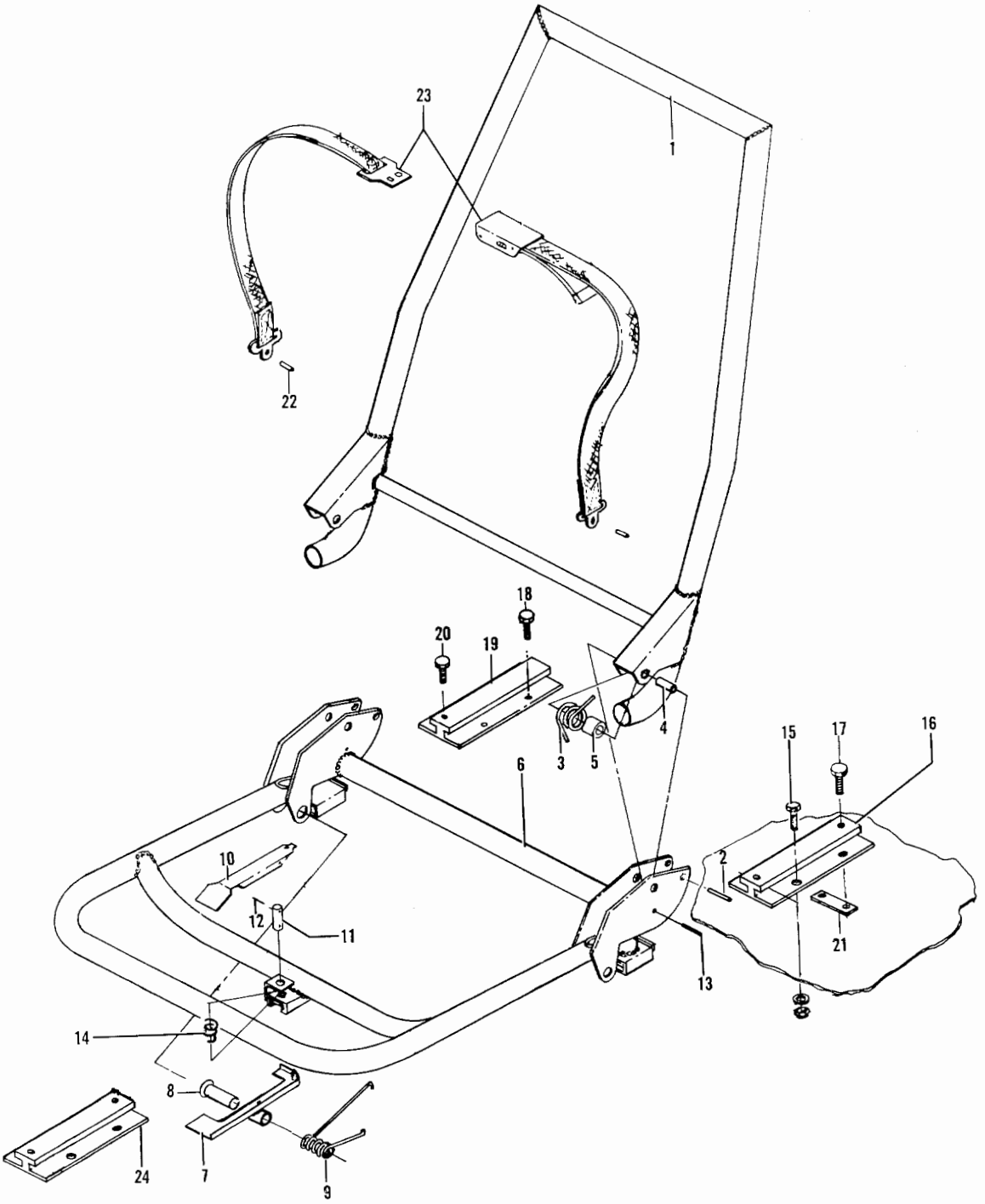

Figure 12C. Front Seat (TD-303 thru TD-533)

FIG. & INDEX NO.	PART NO.	DESCRIPTION 1 2 3 4 5 6 7	UNITS PER ASSY	USABLE ON CODE
		SEAT INSTL,FRONT LH		1
		SEAT INSTL,FRONT RH		1
12C- 1	95-534018-69	WELD ASSY,FRONT SEAT BACK	1	1
		/ATTACHING PARTS/		
- 2	MS20392-2-37	PIN,/SUPERCEDES AN393-37/	2	
- 3	95-534019	SPRING,FRONT SEAT RECLINING	2	
- 4	100801X6-1060	SPACER	2	
	AN380-2-2	PIN,COTTER	2	
		----*----		
- 5	95-534017-27	SPACER,PHENOLIC	2	1
	95-534017-41	BOTTOM ASSY,LH FRONT SEAT	1	1
	95-534017-42	BOTTOM ASSY,RH FRONT SEAT	1	1
	95-534017-29	WELD ASSY,FRONT SEAT BOTTOM	1	1
- 6	95-534018-65	WELD ASSY,FRONT SEAT BOTTOM	1	1
	95-534017-37	HANDLE ASSY,LH FRONT SEAT REAR	1	1
	95-534017-38	HANDLE ASSY,RH FRONT SEAT REAR	1	1
- 7		HANDLE,FRONT SEAT REAR		1
		/BUY 95-534017-37 OR-38/		
		/ATTACHING PARTS/		
- 8	MS20392-5-69	PIN	1	
	AN960-616L	WASHER	1	
	AN380-3-3	PIN,COTTER	1	
		----*----		
- 9	95-534023-1	SPRING,LH FRONT SEAT	1	1
	95-534023	SPRING,RH FRONT SEAT	1	1
- 10	95-534017-5	HANDLE,FRONT SEAT FWD	1	1
- 11	33-534010-33	PIN,FWD HANDLE	1	1
- 12	79-022-094-0650	PIN,ROLL	1	1
- 13	52-032-156-1120	PIN,ROLL	1	1
- 14	111504ZM0020-8	SPRING,FWD HANDLE COMPRESSION	1	1
	95-534017-47	TRACK ASSY,FRONT SEAT LH	1	1
		/ATTACHING PARTS/		
- 15	AN3A	BOLT	4	
	AN960-10L	WASHER	4	
	AN365-1032	NUT	4	
		----*----		
- 16	95-534017-45	TRACK,FRONT SEAT LH	1	1
- 17	AN74A5	BOLT	2	1
	AN935-416	WASHER,LOCK	2	1
	95-534017-49	TRACK ASSY,FRONT SEAT RH	1	1
		/ATTACHING PARTS/		
- 18	AN3A	BOLT	4	
	AN960-10L	WASHER	4	
	AN365-1032	NUT	4	
		----*----		
- 19	33-534010-13	TRACK,FRONT SEAT RH	1	1
- 20	AN74A5	BOLT /LOCATED IN FWD POSITION ONLY/	1	1
	AN935-416	WASHER,LOCK /LOCATED IN FWD POSITION ONLY/	1	1
- 21	33-534010-21	FILLER,BRACKET	2	1
- 22	102933D5ZM0190	SPACER	2	1
- 23	95-534017-35	BELT ASSY,FRONT SEAT	1	1
- 24	33-410040-4	TRACK,FRONT SEAT FWD	1	1

CODE EFFECTIVITY

1 TD-303 THRU TD-533

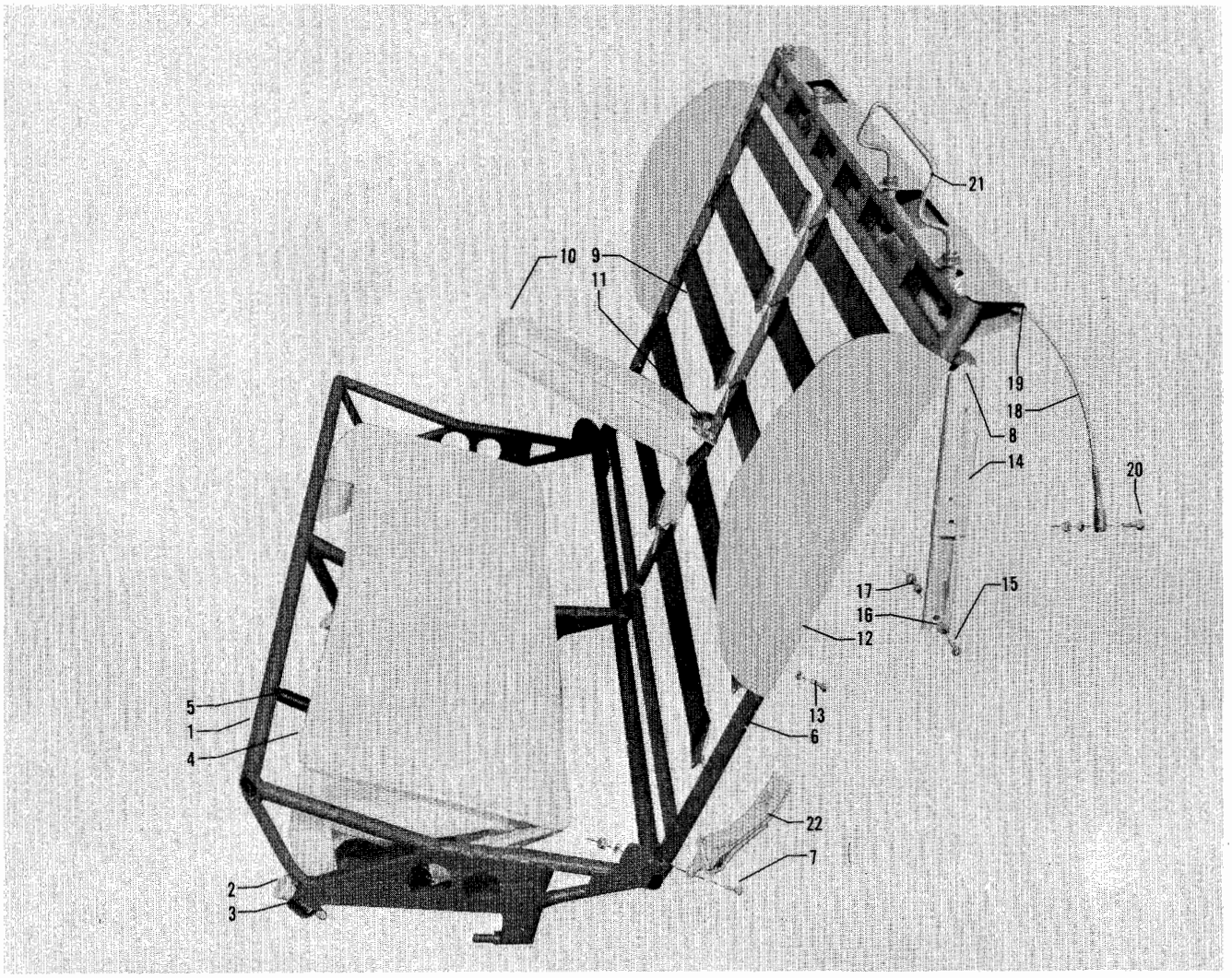

Figure 13. Rear Seat (TD-1 thru TD-173)

FIG. & INDEX NO.	PART NO.	DESCRIPTION 1 2 3 4 5 6 7	UNITS PER ASSY	USABLE ON CODE
		SEAT INSTL,REAR		1
13	35-534360-601	STRUCTURE ASSY,REAR SEAT BOTTOM	1	1
		/SPARE ASSY,SEE SECTION 4 FOR COMPONENTS/		
- 1	35-534360-1	STRUCTURE ASSY,REAR SEAT BOTTOM	1	1
- 2	35-534213	PIN ASSY,REAR SEAT RELEASE	3	1
		/ATTACHING PARTS/		
- 3	100943ZF100G	SPRING	3	
	AN960-516	WASHER	3	
	AN380-2-2	PIN,COTTER	3	
		----*----		
- 4	35-534360-73	HAMMOCK ASSY,REAR SEAT BOTTOM	1	1
- 5	35-534157	SPRING,SEAT	16	1
	35-534360-607	STRUCTURE ASSY,REAR SEAT BACK	1	1
		/SPARE ASSY,SEE SECTION 4 FOR COMPONENTS/		
- 6	35-534360-81	STRUCTURE ASSY,REAR SEAT BACK	1	1
		/ATTACHING PARTS/		
- 7	AN4-14A	BOLT	2	
	AN4-15A	BOLT	1	
- 8	AN3-6A	BOLT	2	
	102933S4ZE0375	SPACER	2	
	102933S5ZM0312	SPACER	2	
	AN960-416	WASHER	3	
	AN960-10	WASHER	2	
	AN365-428	NUT	3	
	AN365-1032	NUT	2	
		----*----		
- 9	900-2	STRAP ASSY	10	1
- 10	35-534371-1	REST ASSY,REAR SEAT ARM	1	1
		/ATTACHING PARTS/		
- 11	AN3-10A	BOLT	1	
	AN960-10L	WASHER	1	
	AN364-1032	NUT	1	
		----*----		
- 12	35-534360-71	PANEL,SEAT BACK LH	1	1
	35-534360-72	PANEL,SEAT BACK RH	1	1
		/ATTACHING PARTS/		
- 13	NAS387-632-10	SCREW	4	
	NAS391-6P	WASHER	4	
		----*----		
- 14	50-534070	SLIDE ASSY,REAR SEAT ADJUSTABLE	2	1
		/ATTACHING PARTS/		
- 15	NAS222-28	BOLT	1	
- 16	102933D5YA0188	SPACER	1	
- 17	102933D5YA0125	SPACER	1	
	AN960-4	WASHER	1	
		----*----		
- 18	NAS304-23-0141	CABLE ASSY	2	1
		/ATTACHING PARTS/		
- 19	AN3-5A	BOLT	1	
- 20	AN3-6A	BOLT	1	
	AN960-10	WASHER	2	
	AN365-1032	NUT	2	
		----*----		
- 21	35-534360-79	TUBE,HEADREST	2	1
		/ATTACHING PARTS/		
	AN936A1016	WASHER,LOCK	2	
	35-534338	NUT,HEADREST KNURLED	2	
		----*----		
	50-534269-615	HARNESS ASSY,REAR SEAT SAFETY	1	1
		/SPARE ASSY,SEE SECTION 4 FOR COMPONENTS/		
		HARNESS ASSY,SAFETY ONE PASSENGER		1
	50-534269-23	WEBBING ASSY	2	1

CODE EFFECTIVITY

1 TD-1 THRU TD-173

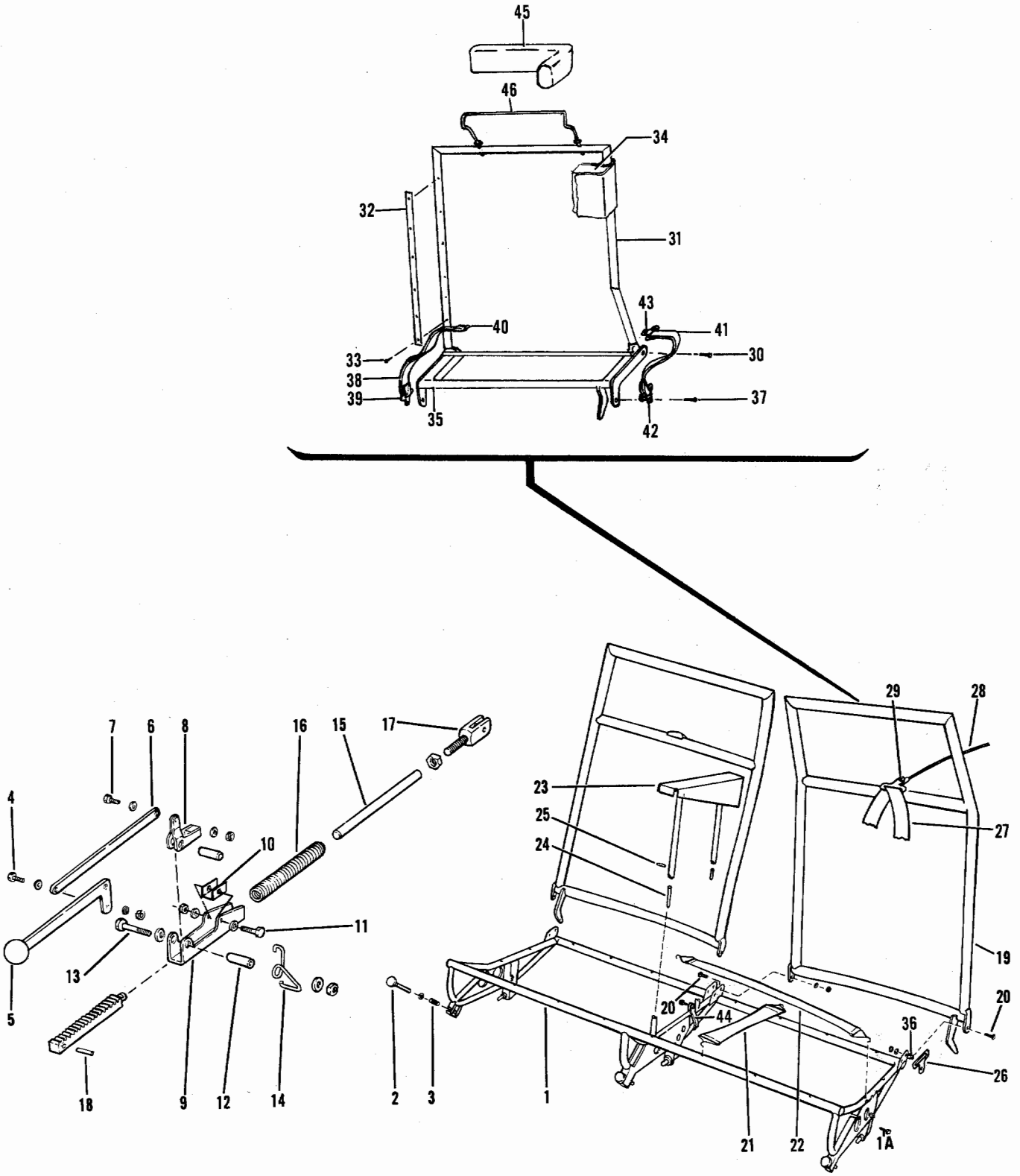

Figure 13A. Rear Seat (TD-174 thru TD-302)

FIG. & INDEX NO.	PART NO.	DESCRIPTION 1 2 3 4 5 6 7	UNITS PER ASSY	USABLE ON CODE
		SEAT INSTL,REAR		1
13A- 1	35-534377-25	STRUCTURE ASSY,REAR SEAT BOTTOM	1	1
		/ATTACHING PARTS/		
- 1A	PK76XZ-6-4	SCREW	6	
		----*----		
- 2	35-534213	PIN ASSY,REAR SEAT RELEASE	3	1
		/ATTACHING PARTS/		
- 3	100943YU100G	SPRING	1	
	AN960-516	WASHER	1	
	AN380-2-2	PIN,COTTER	1	
		----*----		
	35-534378	MECHANISM ASSY,REAR SEAT RECLINE	2	1
		/ATTACHING PARTS/		
- 4	AN3	BOLT	2	
	AN960-10	WASHER	2	
	MS20365-1032	NUT	2	
		----*----		
- 5	35-534378-21	LEVER ASSY,RECLINE MECHANISM	1	1
- 6	35-534378-3	LEVER,MECHANISM CONNECTING	1	1
		/ATTACHING PARTS/		
- 7	AN3	BOLT	2	
	AN960C10L	WASHER	4	
	MS20365-1032	NUT	2	
		----*----		
- 8	35-534378-23	LEVER ASSY,RECLINE MECHANISM	1	1
- 9	35-534378-9	CHANNEL,MECHANISM	1	1
- 10	35-534378-27	SLIDE,MECHANISM	1	1
		/ATTACHING PARTS/		
- 11	AN3	BOLT	1	
	AN960C10L	WASHER	2	
	MS20365-1032	NUT	1	
		----*----		
- 12	102933S6ZM0875	SPACER	1	1
		/ATTACHING PARTS/		
- 13	AN5-21A	BOLT	1	
	AN960C516L	WASHER	2	
	MS20365-524	NUT	1	
		----*----		
- 14	35-534378-19	SPRING,RECLINE MECHANISM SHORT	1	1
- 15	35-534378-25	ROD ASSY,RECLINE MECHANISM	1	1
- 16	35-534378-17	SPRING,RECLINE MECHANISM LONG	1	1
	AN316-7	NUT	1	1
- 17	35-534378-15	FITTING,RECLINE MECHANISM	1	1
- 18	52-028-125-0750	PIN,ROLL	1	1
- 19	35-534377-27	STRUCTURE ASSY,REAR SEAT BACK LH	1	1
		/USED WITHOUT JUMP SEAT INSTL/		
	35-534377-28	STRUCTURE ASSY,REAR SEAT BACK RH	1	1
		/USED WITHOUT JUMP SEAT INSTL/		
		/ATTACHING PARTS/		
- 20	AN4	BOLT	2	
	AN960-416	WASHER	4	
	MS20365-428	NUT	2	
		----*----		
- 21	900-1	STRAP ASSY	8	1
- 22	900-2	STRAP ASSY	4	1
- 23	35-534377-45	REST ASSY,REAR SEAT ARM	1	1
		/SEE FIG. 12A FOR NHA/		
- 24	35-534377-33	PIN,ARM REST GUIDE FRONT	1	1
	35-534377-35	PIN,ARM REST GUIDE REAR	1	1
		/ATTACHING PARTS/		
- 25	52-028-125-0500	PIN,ROLL	2	
		----*----		
- 26	113676-2	FITTING,SAFETY HARNESS	4	1
		/USED WITHOUT JUMP SEAT INSTL/		
		/ATTACHING PARTS/		
	AN4	BOLT	1	
	AN960-416	WASHER	2	
	MS20365-428	NUT	1	
		----*----		

FIG. & INDEX NO.	PART NO.	DESCRIPTION 1 2 3 4 5 6 7	UNITS PER ASSY	USABLE ON CODE
13A- 27	35-534377-61	. HARNESS ASSY,SAFETY . . . . . /USED WITHOUT JUMP SEAT INSTL/	2	1
	35-534377-71	. . WEBBING,SAFETY HARNESS.	1	1
- 28	NAS304-22-0186	. CABLE ASSY /USED WITHOUT JUMP SEAT INSTL/ . . /ATTACHING PARTS/	2	1
- 29	AN3	. BOLT.	2	
	AN960-10	. WASHER.	4	
	MS20365-1032	. NUT	2	
		----*----		
	95-534016	BACK ASSY,BREAKOVER REAR SEAT LH /SEE FIG. 12A FOR NHA/ /USED WITH JUMP SEAT INSTL/	1	1
	95-534016-1	BACK ASSY,BREAKOVER REAR SEAT RH /SEE FIG. 12A FOR NHA/ /USED WITH JUMP SEAT INSTL/ /ATTACHING PARTS/	1	1
- 30	AN4	BOLT.	2	
	100696S-ZP108	SPACER.	2	
	AN960-416	WASHER.	2	
	MS20364-428	NUT	2	
		----*----		
- 31	95-534016-23	. WELD ASSY,REAR SEAT BACK LH	1	1
	95-534016-24	. WELD ASSY,REAR SEAT BACK RH	1	1
- 32	95-534016-29	. STRIP,REAR SEAT BACK. . . . . /ATTACHING PARTS/	1	1
- 33	NAS384-6	. SCREW	4	
	COMM	. WASHER,NUMBER 6 COUNTERSINK	4	
		----*----		
	XA30A385	. NYLON,NEOPRENE COATED	AR	1
- 34	95-534016-21	. CUSHION,REAR SEAT BACK LH	1	1
	95-534016-22	. CUSHION,REAR SEAT BACK RH	1	1
- 35	95-534016-19	. WELD ASSY,REAR SEAT BACK SUPPORT LH	1	1
	95-534016-20	. WELD ASSY,REAR SEAT BACK SUPPORT RH	1	1
- 36	102933D5ZM0190	SPACER /SEE FIG. 12A FOR NHA/ . . . . . /USED WITH BREAKOVER SEAT BACK ASSY/	4	1
	95-534014-53	BELT ASSY,QUICK RELEASE SAFETY /SEE FIG. 12A. . FOR NHA//USED WITH BREAKOVER SEAT BACK ASSY/ /ATTACHING PARTS/	2	1
- 37	AN4	BOLT.	2	
	AN960	WASHER.	1	
	AN960-416L	WASHER.	4	
	AN960-616	WASHER.	4	
	AN365	NUT	1	
	MS20365-428	NUT	2	
		----*----		
	414-183389-5	. STRAP ASSY,SAFETY BELT.	1	1
	414-183389-1	. . STRAP ASSY,SAFETY BELT.	1	1
- 38	FD161	. . . WEBBING	1	1
- 39	113676-4	. . . FITTING,SAFETY BELT	1	1
	113642	. . . PLACARD,SAFETY BELT	1	1
- 40	FDA-1645	. . BUCKLE.	1	1
	414-183389-3	. STRAP ASSY,SAFETY BELT.	1	1
- 41	FD161	. . WEBBING	1	1
- 42	113676-4	. . FITTING,SAFETY BELT	1	1
	113642	. . PLACARD,SAFETY BELT	1	1
- 43	FD-1643	. . BAR,RELEASE	1	1
- 44	95-534014-75	STRAP,STEEL /SEE FIG. 12A FOR NHA/. . . . . /USED WITH BREAKOVER SEAT BACK ASSY/	1	1
- 45	35-534304-127	HEADREST,LH /SEE FIG. 12A FOR NHA/. . . . . /USED WITH BREAKOVER SEAT BACK ASSY/	1	1
- 46	35-534360-79	FRAME,HEADREST LH /SEE FIG. 12A FOR NHA/. . . . /USED WITH BREAKOVER SEAT BACK ASSY/	1	1

CODE EFFECTIVITY

1 TD-174 THRU TD-302

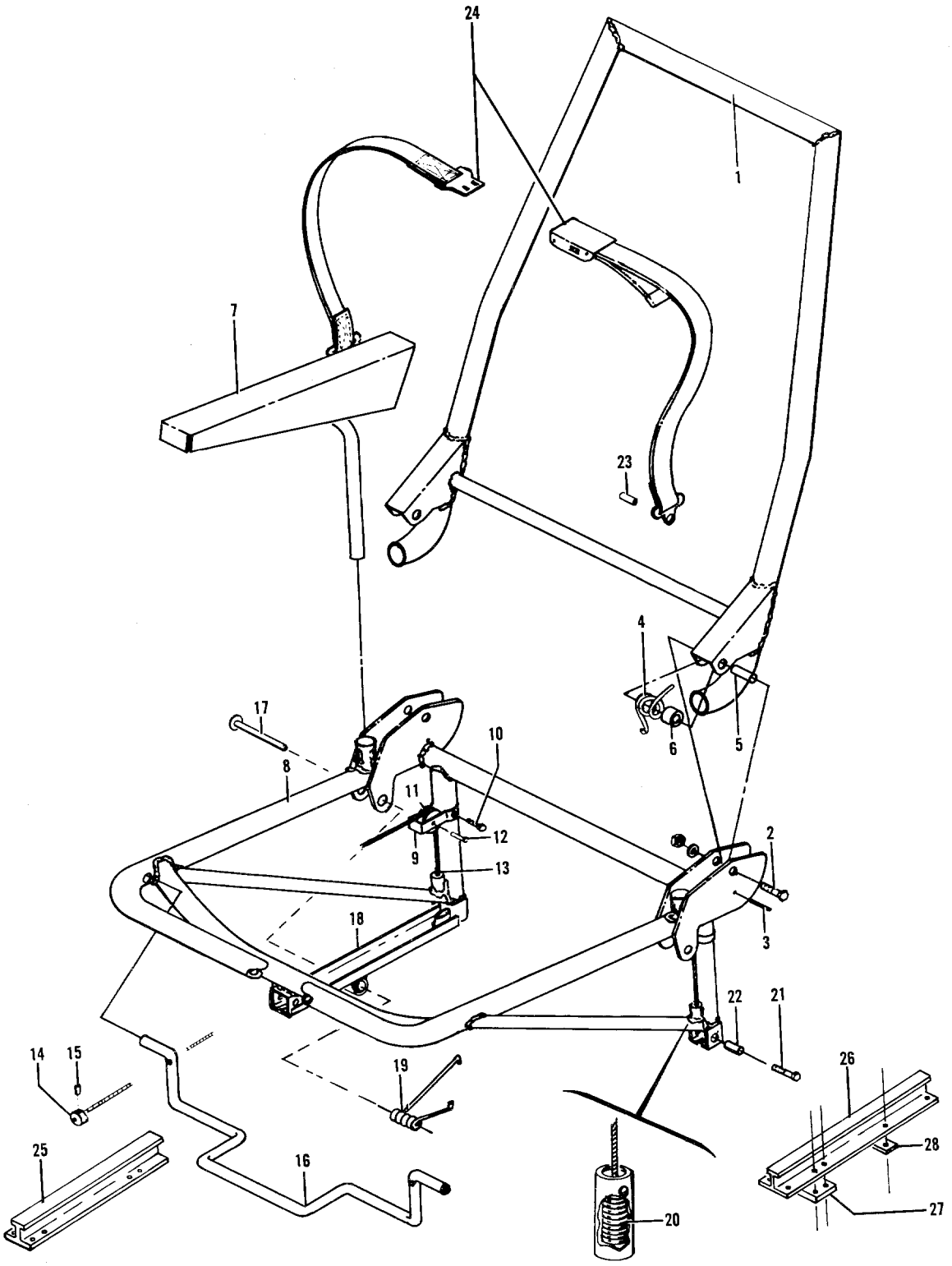

Figure 13B. Rear Seat (TD-303 thru TD-533)

FIG. & INDEX NO.	PART NO.	DESCRIPTION 1 2 3 4 5 6 7	UNITS PER ASSY	USABLE ON CODE
		SEAT INSTL,REAR LH.		1
		SEAT INSTL,REAR RH.		1
13B- 1	95-534018-69	. WELD ASSY,REAR SEAT BACK.	1	1
		/ATTACHING PARTS/		
- 2	AN24-28A	. BOLT.	2	
- 3	52-032-156-1120	. PIN	2	
- 4	95-534019	. SPRING,REAR SEAT RECLINING.	2	
- 5	100801X6-1060	. SPACER.	2	
- 6	95-534017-27	. SPACER,PHENOLIC	2	
	AN960-416L	. WASHER.	2	
	AN365-416	. NUT	2	
		----*----		
	95-534018-73	. REST ASSY,REAR SEAT LH ARM.	1	1
- 7	95-534018-74	. REST ASSY,REAR SEAT RH ARM.	1	1
	95-534018-93	. BOTTOM ASSY,REAR SEAT LH.	1	1
	95-534018-94	. BOTTOM ASSY,REAR SEAT RH.	1	1
	95-534018-63	. . WELD ASSY,REAR SEAT BOTTOM.	1	1
- 8	95-534018-65	. . . WELD ASSY,REAR SEAT BOTTOM.	1	1
- 9	95-534018-39	. . BRACKET,PULLEY.	1	1
		/ATTACHING PARTS/		
- 10	AN3	. . BOLT.	1	
	AN960	. . WASHER.	1	
	AN365-1032	. . NUT	1	
		----*----		
- 11	95-534018-43	. . PULLEY,REAR SEAT CABLE.	1	1
		/ATTACHING PARTS/		
- 12	AN392-11	. . PIN	1	
	AN960-6	. . WASHER.	1	
	AN380-2-1	. . PIN,COTTER.	1	
		----*----		
- 13	95-534018-47	. . WELD ASSY,REAR SEAT CABLE	1	1
- 14	187247	. . STOP,FOLLOW UP CABLE.	1	1
		/ATTACHING PARTS/		
- 15	AN515-6	. . SCREW	1	
		----*----		
- 16	95-534018-57	. . HANDLE,REAR SEAT FWD.	1	1
	95-534018-91	. . HANDLE ASSY,REAR SEAT AFT	1	1
		/ATTACHING PARTS/		
- 17	MS20392-5-53	. . PIN	1	
	AN960-616L	. . WASHER.	1	
	AN380-3-3	. . PIN,COTTER.	1	
		----*----		
- 18	95-534018-87	. . . HANDLE,REAR SEAT AFT.	1	1
- 19	95-534023-1	. . SPRING,LH REAR SEAT AFT HANDLE.	1	1
	95-534023	. . SPRING,RH REAR SEAT AFT HANDLE.	1	1
- 20	111504ZL0102-13	. . SPRING,REAR SEAT CABLE.	1	1
- 21	AN4A	. . BOLT.	3	1
- 22	100696-S-ZN-020	. . SPACER,REAR SEAT FOOT	3	1
	AN960-416	. . WASHER.	3	1
	AN365-416	. . NUT	3	1
- 23	102933D5ZM0190	. SPACER,SAFETY BELT FITTING.	2	1
- 24	95-534017-35	. BELT ASSY,REAR SEAT	1	1
- 25	95-420016-23	TRACK ASSY,REAR SEAT FWD.	2	1
		/ATTACHING PARTS/		
	AN509-1032	SCREW	8	
	AN525-1032	SCREW	2	
	AN960-10	WASHER.	4	
	AN365-1032	NUT	4	
	MK2000-1032	NUTPLATE.	4	
	MK1000-1032	NUTPLATE.	2	
		----*----		

FIG. & INDEX NO.	PART NO.	DESCRIPTION 1 2 3 4 5 6 7	UNITS PER ASSY	USABLE ON CODE
13B- 26	95-420015-145	TRACK,REAR SEAT AFT	4	1
		/ATTACHING PARTS/		
	AN525-10	SCREW	10	
	22NA21-02	NUTPLATE.	10	
		----*----		
- 27	95-420015-149	SHIM,FWD.	4	1
- 28	95-420015-147	SHIM,AFT.	4	1

CODE EFFECTIVITY

1 TD-303 THRU TD-533

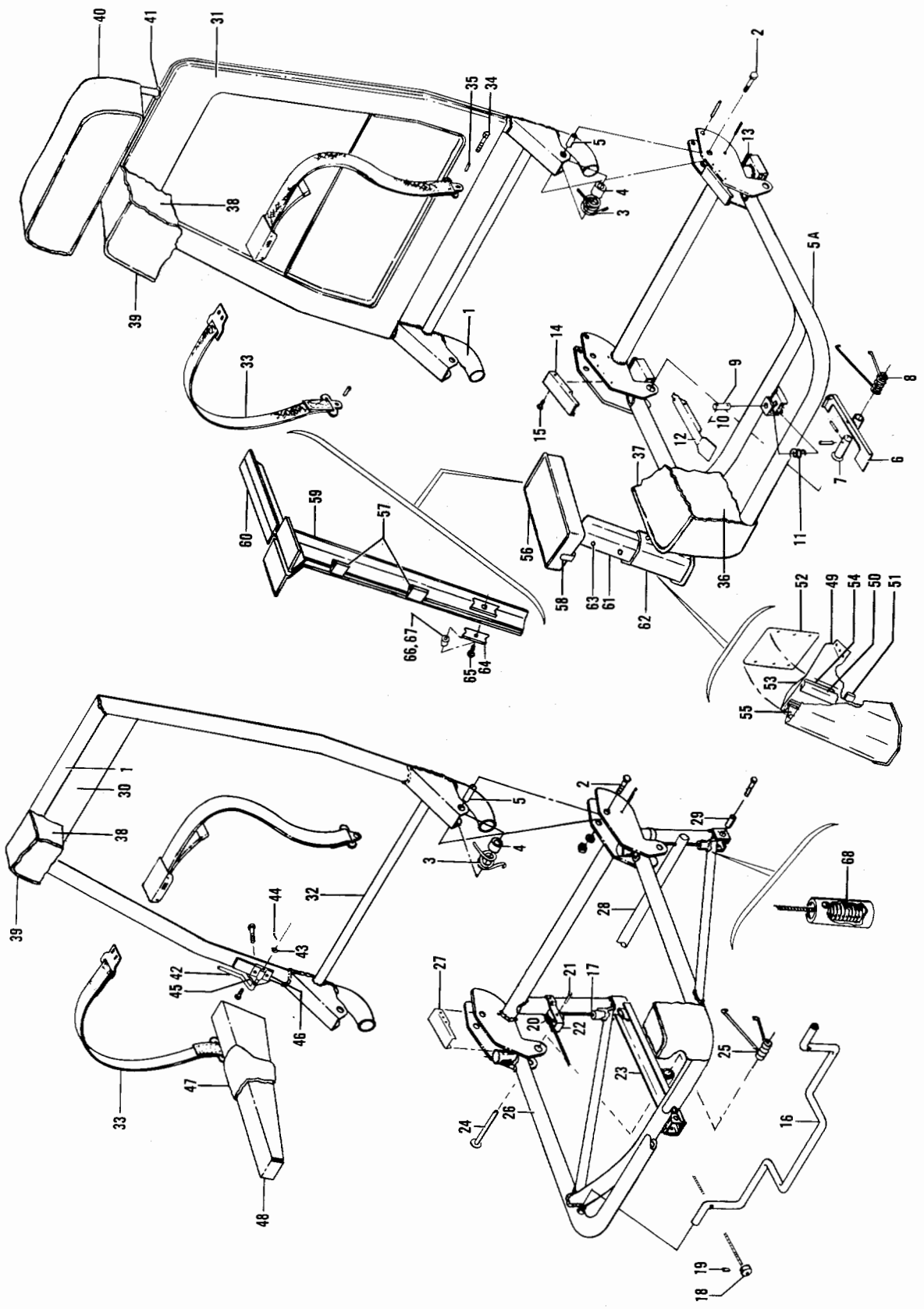

Figure 13C. Front And Rear Seats (TD-534 thru TD-707)

FIG. & INDEX NO.	PART NO.	DESCRIPTION 1 2 3 4 5 6 7	UNITS PER ASSY	USABLE ON CODE
13C-	95-534041-1	SEAT INSTL,PILOTS	NP	1
	95-534041-2	SEAT INSTL,COPILOTS	NP	1
	95-534041-3	SEAT INSTL,LH REAR	NP	1
	95-534041-4	SEAT INSTL,RH REAR	NP	1
- 1	95-534041-21	. FRAME ASSY,PILOT & COPILOT CHAIR BACK	1	1
	95-534041-17	. FRAME ASSY,LH REAR SEAT BACK	1	1
	95-534041-18	. FRAME ASSY,RH REAR SEAT BACK	1	1
		/ATTACHING PARTS/		
- 2	AN4A	. BOLT	2	
- 3	¤95-534019	. SPRING	2	
- 4	95-534017-27	. SPACER,PHENOLIC	2	
- 5	100801X6-1000	. SPACER	2	
	¤AN960-416L	. WASHER	2	
	¤22K1-048	. NUT	2	
		----*----		
	95-534041-19	. FRAME ASSY,FRONT SEAT LH	1	1
	95-534041-20	. FRAME ASSY,FRONT SEAT RH	1	1
	95-534041-15	. FRAME ASSY,REAR SEAT LH	1	1
	95-534041-16	. FRAME ASSY,REAR SEAT RH	1	1
	95-534017-41	. . FRAME ASSY,PILOTS SEAT BOTTOM	1	1
	95-534017-42	. . FRAME ASSY,COPILOTS SEAT BOTTOM	1	1
- 5A	95-534017-29	. . . FRAME ASSY,PILOTS & COPILOTS SEAT BOTTOM	1	1
- 6	¤95-534017-65	. . . HANDLE ASSY,SEAT BACK ADJUST LH	1	1
		/SUPERSEDES 95-534017-37/		
	¤95-534017-66	. . . HANDLE ASSY,SEAT BACK ADJUST RH	1	1
		/SUPERSEDES 95-534017-38/		
		/ATTACHING PARTS/		
- 7	¤MS20392-5-69	. . . PIN,HANDLE HINGE	1	
- 8	¤95-534023	. . . SPRING,LH	1	
	¤95-534023-1	. . . SPRING,RH	1	
	¤AN960-616L	. . . WASHER	1	
	¤AN380-3-3	. . . COTTER PIN	1	
		----*----		
- 9	¤33-534010-33	. . . PIN,FWD & AFT ADJUST	1	1
		/ATTACHING PARTS/		
- 10	79-022-094-0650	. . . PIN,ROLL	2	
- 11	¤111504ZM0016-8	. . . SPRING	1	
		----*----		
- 12	¤95-534017-5	. . . HANDLE ASSY /SUPERSEDES 95-534017-17/	1	1
- 13	95-534017-63	. . . SLIDE,REAR FOOT	2	1
	95-534017-9	. . . SLIDE,FRONT FOOT	1	1
- 14	50-534430	. . . CAP,COVER	2	1
		/ATTACHING PARTS/		
- 15	¤PK65A-4-6	. . . SCREW	3	
		----*----		
	95-534041-13	. . FRAME ASSY,LH REAR BOTTOM	1	1
	95-534041-14	. . FRAME ASSY,RH REAR BOTTOM	1	1
- 16	95-534018-57	. . . HANDLE ASSY,SEAT ADJUST	1	1
- 17	95-534018-47	. . . CABLE ASSY,SEAT ADJUST	2	1
		/ATTACHING PARTS/		
- 18	¤187247	. . . STOP	1	
- 19	¤AN515-6R8	. . . SCREW	1	
		----*----		
- 20	95-534018-43	. . . PULLEY	2	1
		/ATTACHING PARTS/		
- 21	MS20392-1-11	. . . PIN /SUPERSEDES AN392-11/	1	
	¤AN960-6	. . . WASHER	1	
	¤MS24665-130	. . . COTTER PIN	1	
		----*----		
- 22	95-534018-39	. . . BRACKET	2	1
		/ATTACHING PARTS/		
	PK78-4	. . . SCREW	2	
		----*----		

FIG. & INDEX NO.	PART NO.	DESCRIPTION 1 2 3 4 5 6 7	UNITS PER ASSY	USABLE ON CODE
13C- 23	¤95-534018-91	. . . HANDLE ASSY,SEAT BACK ADJUST.	1	1
		/ATTACHING PARTS/		
- 24	MS20392-5-53	. . . PIN	1	
- 25	¤95-534023-1	. . . SPRING,LH	1	
	¤95-534023	. . . SPRING,RH	1	
	¤AN960-616L	. . . WASHER.	1	
	¤AN380-3-3	. . . COTTER PIN.	1	
		----*----		
- 26	95-534018-63	. . . WELD ASSY,SEAT BOTTOM	1	1
- 27	50-534430	. . . CAP	2	1
		/ATTACHING PARTS/		
	¤PK65A-4-6	. . . SCREW	3	
		----*----		
- 28	35-534390-55	. . . TUBE.	1	1
		/ATTACHING PARTS/		
	¤AN380C2-2	. . . COTTER PIN.	1	
		----*----		
- 29	102933S5ZP0620	. . . SPACER.	2	1
	102933S5ZR0620	. . . SPACER /ALTERNATE FOR 102933S5ZP0620/ . .	2	1
	102933S5ZS0620	. . . SPACER /ALTERNATE FOR 102933S5ZP0620/ . .	2	1
		/ATTACHING PARTS/		
	AN4	. . . BOLT.	1	
	¤AN960-416	. . . WASHER.	1	
	¤MS20365-428	. . . NUT	1	
		----*----		
- 30	95-534041-23	. COVER	1	1
- 31	95-534041-25	. FRAME	1	1
- 32	95-534041-27	. ANGLE	1	1
- 33	FDC2700-105	. BELT,SEAT SAFETY.	1	1
		/ATTACHING PARTS/		
- 34	¤AN4-5A/M/	. BOLT.	2	
- 35	102933D5ZM0190	. SPACER.	2	
	¤AN936B416	. WASHER.	2	
		----*----		
- 36	50-534041-29	. CUSHION ASSY,SEAT BOTTOM.	1	1
- 37	50-534041-9	. COVER ASSY,SEAT BOTTOM.	1	1
- 38	96-534016-1	. CUSHION ASSY,SEAT BACK.	1	1
- 39	95-534041-11	. COVER ASSY,SEAT BACK.	1	1
- 40	¤96-534020-1	. HEAD REST ASSY.	AR	1
- 41	¤130010	. MOULDING,HEAD REST INSERT	2	1
	¤96-534017-33	. ARM ASSY,LH ARMREST	1	1
- 42	¤96-534017-34	. ARM ASSY,RH ARMREST	1	1
		/ATTACHING PARTS/		
- 43	¤AN960-616	. WASHER.	1	
- 44	¤AN380-3-3	. COTTER PIN.	1	
		----*----		
- 45	¤96-534017-25	. ESCUTCHEON.	1	1
		/ATTACHING PARTS/		
	NAS384-8	. SCREW	2	
		----*----		
- 46	¤96-534017-21	. HINGE,ARMREST	1	1
		/ATTACHING PARTS/		
	¤AN525-10R10	. SCREW	2	
	¤AN960-10	. WASHER.	2	
	¤MS20365-1032	. NUT	2	
		----*----		
- 47	96-534013-11	. COVER ASSY,ARMREST LH	1	1
	96-534013-12	. COVER ASSY,ARMREST RH	1	1
- 48	¤96-534017-7	. CAP ASSY,ARMREST LH	1	1
	¤96-534017-8	. CAP ASSY,ARMREST RH	1	1
	35-534372-77	ARMREST INSTL,CENTER.	NP	1
	35-534372-603	BRACKET ASSY,ARMREST CENTER FRONT	1	1
- 49	35-534372-79	. BRACKET	1	1
- 50	35-534372-25	. ANGLE	1	1

FIG. & INDEX NO.	PART NO.	DESCRIPTION 1 2 3 4 5 6 7	UNITS PER ASSY	USABLE ON CODE
13C- 51	¤35-534372-31	. PLATE	1	1
- 52	35-534372-81	. PLATE	1	1
- 53	¤35-534372-49	. STOP.	1	1
- 54	¤35-534372-41	. WAY	2	1
- 55	¤35-534372-5	. CATCH ASSY.	1	1
		/ATTACHING PARTS/		
	¤AN3-13A/M/	. BOLT.	3	
	¤AN3-14A/M/	. BOLT.	1	
	¤AN960-10	. WASHER.	4	
		----*----		
-	35-534372-89	ARMREST ASSY,FRONT SEAT	1	1
- 56	35-534372-83	. ARMREST	1	1
- 57	35-534372-33	. CLIP.	2	1
- 58	35-534372-71	. HOOK.	1	1
- 59	¤35-534372-65	. SUPPORT	1	1
- 60	35-534372-67	. BRACKET	1	1
- 61	¤35-534372-37	COVER	1	1
- 62	¤35-534372-85	COVER ASSY.	1	1
		/ATTACHING PARTS/		
- 63	¤AN530-8R6	SCREW	6	
		----*----		
- 64	¤50-534073-1	CAM	1	1
		/ATTACHING PARTS/		
- 65	¤AN525-832R11	SCREW	1	
- 66	¤105739X-XP0221	SPACER.	1	
- 67	¤105739X-XR0150	SPACER.	1	
	¤AN960-10L	WASHER.	1	
	¤MS20365-832	NUT /SUPERSEDES AN365-832/.	1	
		----*----		
- 68	111504ZL0102-13	SPRING,REAR SEAT PIN ADJUSTMENT	2	1
	95-420017-5	. TRACK,FRONT SEAT CENTER	1	1
	95-420017-9	. TRACK,FRONT SEAT AFT LH	1	1
	95-420017-7	. TRACK,FRONT SEAT AFT RH	1	1
	¤95-420016-23	. TRACK,REAR SEAT CENTER.	1	1
	95-420015-9	. TRACK,REAR SEAT AFT LH&RH	2	1

CODE EFFECTIVITY

1 TD-534 THRU TD-707

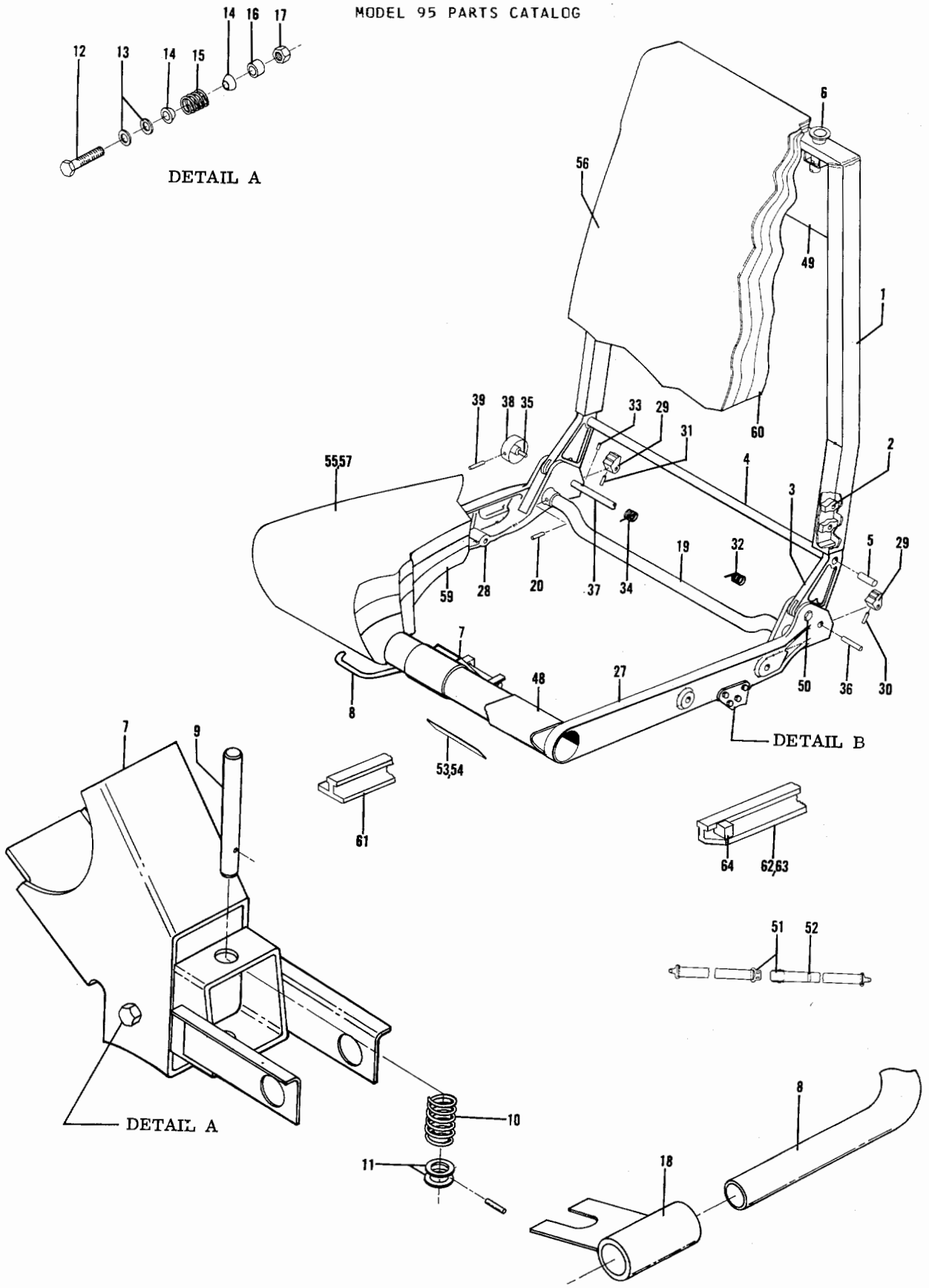

Figure 13D. Pilot and Copilots Seats (TD-708 and After)
(Sheet 1 of 2 Sheets)

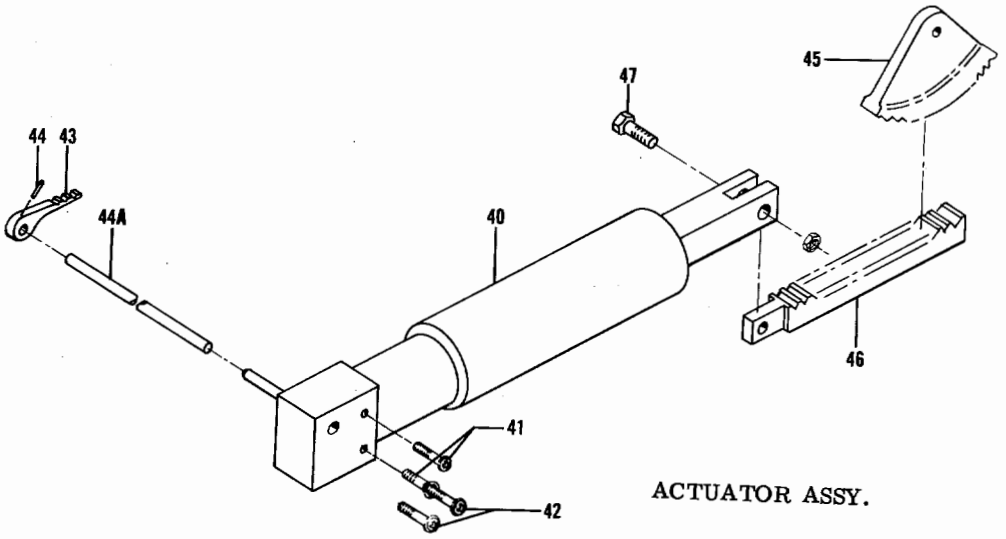

ACTUATOR ASSY.

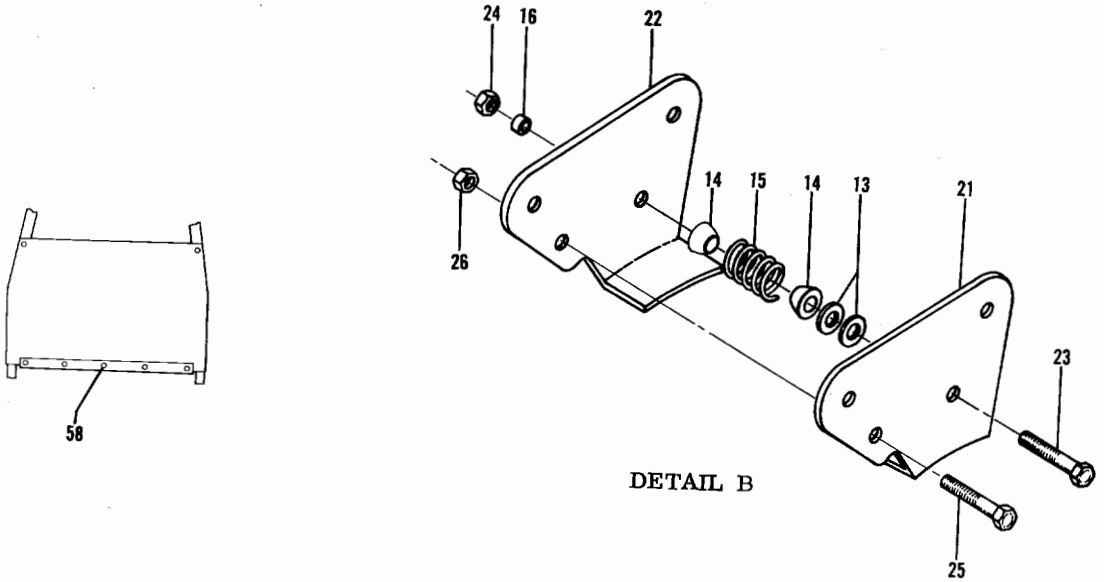

DETAIL B

Figure 13D. Pilot and Copilot Seats (TD-708 and After)
(Sheet 2 of 2 Sheets)

FIG. & INDEX NO.	PART NO.	DESCRIPTION 1 2 3 4 5 6 7	UNITS PER ASSY	USABLE CN CODE
13D-	96-534071-1	SEAT INSTL,PILOT AND COPILOT.	NP	1
	96-534072-1	. SEAT ASSY,PILOT	1	1
	96-534072-3	. SEAT ASSY,COPILOT	1	1
	96-534073-1	. . CHAIR FRAME ASSY,PILOTS	1	1
	96-534073-3	. . CHAIR FRAME ASSY,COPILOTS	1	1
	60-530042	. . . SEAT BACK ASSY,PILOTS CHAIR	1	1
	60-530042-15	. . . SEAT BACK ASSY,COPILOTS CHAIR	1	1
		/ATTACHING PARTS/		
	AN525-10R22	. . . SCREW	2	
	102933D4ZM0190	. . . SPACER.	2	
	¤AN960-10L	. . . WASHER.	2	
	¤22K2-02	. . . CAP NUT	2	
		----*----		
- 1	60-530042-1	. . . . WELD ASSY,CHAIR BACK.	1	1
- 2	60-530042-13	. . . . SPACER.	1	1
- 3	60-530040-1	. . . . ADAPTER	2	1
		/ATTACHING PARTS/		
	¤AN525-10R14	. . . . SCREW	2	
	AN525-10R22	. . . . SCREW	2	
	¤AN960-10	. . . . WASHER.	2	
	¤MS20364-1032.	. . . . NUT	2	
		----*----		
- 4	60-530042-9	. . . . TUBE.	1	1
		/ATTACHING PARTS/		
- 5	MS171684	. . . . ROLL PIN.	2	
		----*----		
- 6	¤130010	. . . . MOLDING	2	1
	96-534073-7	. . . FRAME ASSY,CHAIR BOTTOM	1	1
- 7	96-534073-11	. . . . LEG ASSY /WELD/,FRONT	1	1
- 8	96-534073-13	. . . . HANDLE.	1	1
- 9	36-530025-15	. . . . PIN	1	1
- 10	100943ZS027G	. . . . SPRING.	1	1
- 11	¤AN960-416L	. . . . WASHER.	2	1
- 12	¤AN3-14A/M/	. . . . BOLT.	1	1
- 13	¤AN960-10L	. . . . WASHER.	2	1
- 14	¤118641	. . . . ROLLER.	6	1
- 15	100943ZA016J	. . . . SPRING.	1	1
- 16	10293304ZJ0190	. . . . SPACER.	3	1
- 17	¤MS20365-1032	. . . . NUT	1	1
- 18	60-530013-11	. . . . WELD ASSY	1	1
		/ATTACHING PARTS/		
	¤MS171498	. . . . ROLL PIN.	2	
		----*----		
- 19	36-530025-27	. . . . SUPPORT TUBE,PILOTS CHAIR	1	1
		/ATTACHING PARTS/		
- 20	¤MS171564	. . . . ROLL PIN.	1	
		----*----		
- 21	36-530025-13	. . . . FOOT.	2	1
- 22	36-530025-14	. . . . FOOT.	2	1
		/ATTACHING PARTS/		
- 23	¤AN3-14A/M/	. . . . BOLT.	2	
	¤AN960-10L	. . . . WASHER.	2	
- 24	¤MS20365-1032	. . . . NUT	2	
		----*----		
- 25	¤AN3-14A/M/	. . . . BOLT.	2	1
	102933D4ZJ1000	. . . . SPACER.	2	1
	¤AN960-10L	. . . . WASHER.	2	1
- 26	¤MS20365-1032	. . . . NUT	2	1
- 27	60-530039-1	. . . . FRAME,LH.	1	1
- 28	60-530039-3	. . . . FRAME,RH.	1	1
	96-534073-9	. . . SUPPORT INSTL,PILOTS SEAT BACK.	NP	1
- 29	60-530043	. . . . CAM,PILOTS CHAIR.	2	1
		/ATTACHING PARTS/		
- 30	¤MS171534	. . . . ROLL PIN.	1	
- 31	¤MS171539	. . . . ROLL PIN.	1	
		----*----		

FIG. & INDEX NO.	PART NO.	DESCRIPTION 1 2 3 4 5 6 7	UNITS PER ASSY	USABLE ON CODE
13D- 32	60-530046-1	. . . . SPRING,PILOTS CHAIR LH.	1	1
- 33	¤MS171499	. . . . ROLL PIN,PILOTS CHAIR	2	1
- 34	60-530046-2	. . . . SPRING,PILOTS CHAIR RH.	1	1
- 35	60-530044	. . . . PIN,PILOTS CHAIR RH	1	1
- 36	60-530045	. . . . PIN,PILOTS CHAIR LH	1	1
- 37	60-530013-41	. . . . TUBE,PILOTS CHAIR	1	1
- 38	60-530047	. . . . KNOB,PILOTS CHAIR	1	1
		/ATTACHING PARTS/		
- 39	MS171507	. . . . ROLL PIN.	1	
		----*----		
- 40	60-530051-1	. . . ACTUATOR ASSY,COPILOTS CHAIR.	1	1
		/ATTACHING PARTS/		
- 41	NAS221-29	. . . SCREW	2	
- 42	¤NAS221-8	. . . SCREW	2	
	¤AN960-10L	. . . WASHER.	4	
	¤MS20365-1032	. . . NUT	4	
		----*----		
- 43	60-530052	. . . HANDLE ASSY,COPILOTS CHAIR.	1	1
		/ATTACHING PARTS/		
- 44	¤MS171498	. . . ROLL PIN.	1	
		----*----		
- 45	60-530041-1	. . . GEAR,COPILOTS CHAIR	1	1
- 46	60-530054-1	. . . GEAR RACK ASSY,COPILOTS CHAIR	1	1
		/ATTACHING PARTS/		
- 47	¤AN4-7A/M/	. . . BOLT.	1	
	¤MS20365-428	. . . NUT	1	
		----*----		
- 48	36-530023-17	. . EXTENSION,CHAIR BOTTOM.	1	1
- 49	33-534027-11	. . PAN,CHAIR BACK.	1	1
	130498C19-39	. . SEAT BELT ASSY.	1	1
		/ATTACHING PARTS/		
- 50	¤NAS221-21	. . BOLT.	1	
	100951X032WF	. . WASHER.	1	
	102933D4ZM0190	. . SPACER.	1	
	¤AN960-10L	. . WASHER.	1	
	¤22K2-02	. . NUT	1	
		----*----		
- 51	CS4000W/265-4	. . . BUCKLE ASSY	1	1
- 52	¤D611A	. . . TIP	1	1
- 53	130569	. . PLATE,SEAT IDENTIFICATION	1	1
		/ATTACHING PARTS/		
- 54	AN530-4R4	. . SCREW	2	
		----*----		
- 55	96-534072-15	. . SEAT COVER ASSY	1	1
- 56	96-534072-11	. . BACK COVER ASSY	1	1
		/ATTACHING PARTS/		
- 57	¤NAS384-6-6P	. . SCREW	2	
	¤NAS391-6P	. . WASHER.	2	
		----*----		
- 58	¤AN227-6B	. . . BUTTON,UPHOLSTERY	5	1
	¤AN227-7B	. . . SOCKET,UPHOLSTERY	5	1
	¤AN227-8B	. . . STUD,UPHOLSTERY	5	1
	¤AN227-9B	. . . EYELET,UPHOLSTERY	5	1
- 59	NO NUMBER	. . CUSHION ASSY,SEAT BOTTOM.	NP	1
- 60	NO NUMBER	. . CUSHION ASSY,SEAT BACK.	NP	1
- 61	95-420017-5	TRACK,SEAT CENTER	2	1
- 62	95-420017-17	TRACK,SEAT INBOARD.	2	1
- 63	95-420017-19	TRACK,SEAT OUTBOARD	2	1
- 64	¤414-180657-3	STOP,SEAT TRACK	16	1
		/ATTACHING PARTS/		
	¤NAS221-21	BOLT.	1	
	¤MS20365-1032	NUT	8	
		----*----		

CODE EFFECTIVITY

1 TD-708 AND AFTER

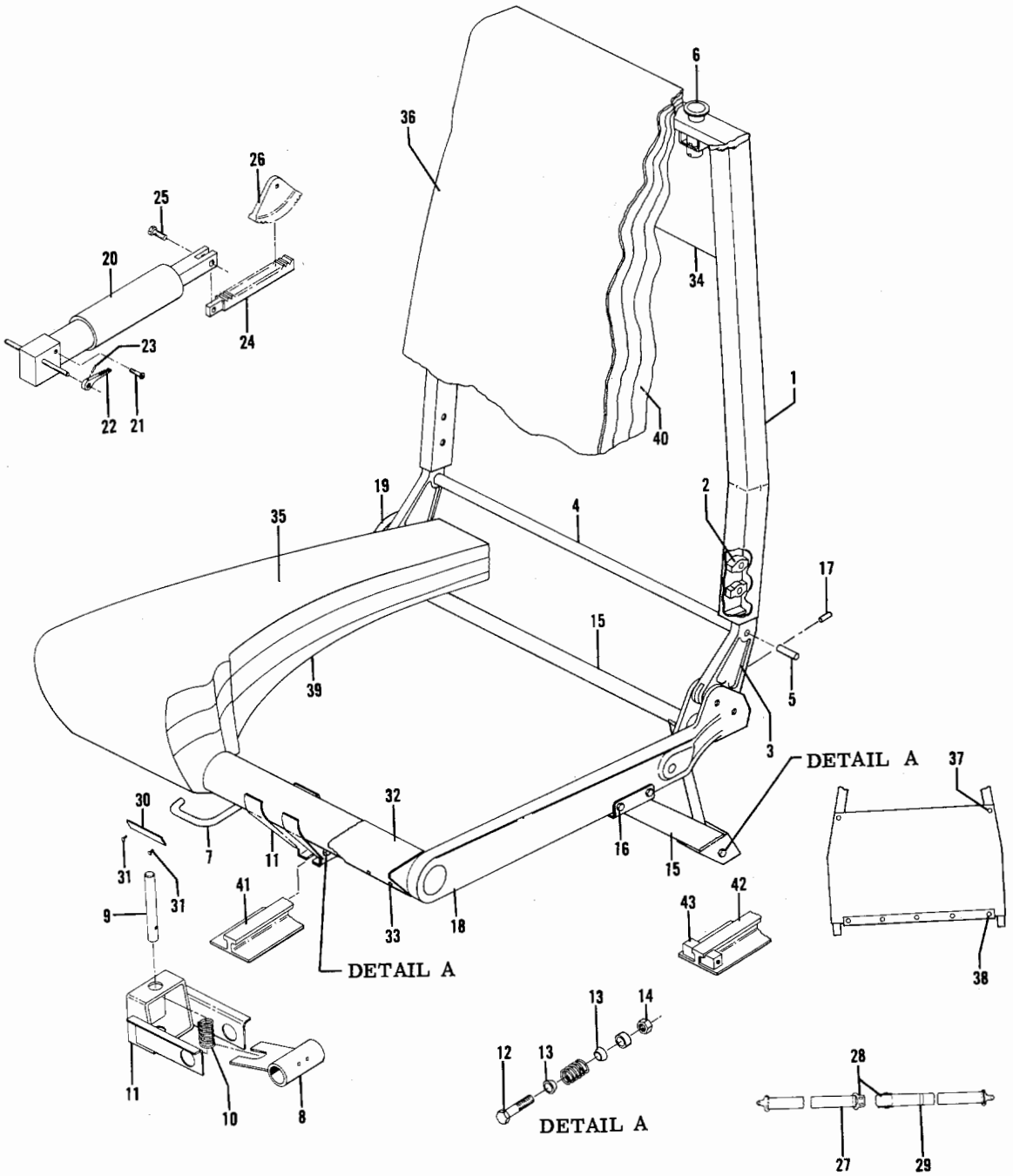

Figure 13E. Passenger Seat (TD-708 and After)

FIG. & INDEX NO.	PART NO.	DESCRIPTION 1 2 3 4 5 6 7	UNITS PER ASSY	USABLE ON CODE
13E-	96-534071-1	SEATING INSTALLATION,PASSENGER.	NP	1
	96-534072-5	. UPHOLSTERED CHAIR ASSY,PASSENGER LH	1	1
	96-534072-7	. UPHOLSTERED CHAIR ASSY,PASSENGER RH	1	1
	96-534074-1	. . FRAME ASSY,PASSENGER CHAIR LH	1	1
	96-534074-3	. . FRAME ASSY,PASSENGER CHAIR RH	1	1
	60-530042-15	. . . SEAT BACK ASSY,PASSENGER CHAIR LH	1	1
	60-530042	. . . SEAT BACK ASSY,PASSENGER CHAIR RH	1	1
		/ATTACHING PARTS/		
	¤NAS221-21	. . . BOLT,ATTACHES SEAT BACK AND SEAT BELT . .	2	
	100951X032WF	. . . WASHER.	2	
	10293304ZM0190	. . . SPACER.	2	
	¤AN960-10L	. . . WASHER.	2	
	¤22K2-02	. . . NUT	2	
		----*----		
- 1	60-530042-1	. . . . WELD ASSY,CHAIR BACK.	1	1
- 2	60-530042-13	. . . . SPACER.	1	1
- 3	60-530040-1	. . . . ADAPTER	2	1
		/ATTACHING PARTS/		
	¤AN525-10R14	. . . SCREW	2	
	AN525-10R22	. . . . SCREW	2	
	¤AN960-10	. . . WASHER.	4	
	¤MS20364-1032	. . . . NUT	4	
		----*----		
- 4	60-530042-9	. . . . TUBE.	1	1
		/ATTACHING PARTS/		
- 5	MS171684	. . . . PIN	2	
		----*----		
- 6	¤130010	. . . . MOULDING.	2	1
- 7	96-534074-23	. . . HANDLE,LH PASSENGER CHAIR	1	1
	96-534074-19	. . . HANDLE,RH PASSENGER CHAIR	1	1
- 8	60-530013-11	. . . WELD ASSY	1	1
		/ATTACHING PARTS/		
	¤MS171498	. . . ROLL PIN.	2	
		----*----		
	96-534074-11	. . . FRAME ASSY,SEAT BOTTOM.	1	1
- 9	36-530025-15	. . . . PIN	1	1
- 10	100943ZS027G	. . . . SPRING.	1	1
	1/16 X 1/2 PIN.	. . . ROLL PIN,/TYPE E/	1	1
	¤AN960-416L	. . . . WASHER.	2	1
- 11	96-534073-15	. . . . WELD ASSY,FRONT LEG	1	1
- 12	¤AN3-14A/M/	. . . . BOLT.	3	1
	¤AN960-10L	. . . . WASHER.	6	1
- 13	¤118641	. . . . ROLLER.	6	1
	100943ZA016J	. . . . SPRING.	3	1
	102933D4ZJ0190	. . . SPACER.	3	1
- 14	¤MS20365-1032	. . . . NUT	3	1
- 15	96-534074-21	. . . . WELD ASSY,REAR LEG.	1	1
		/ATTACHING PARTS/		
- 16	¤AN3-14A/M/	. . . . BOLT.	4	
	¤AN960-10L	. . . . WASHER.	4	
	¤MS20365-1032	. . . . NUT	4	
- 17	¤MS171534	. . . . ROLL PIN.	2	
		----*----		
- 18	60-530039-1	. . . . SIDE FRAME,LH	1	1
- 19	60-530039-2	. . . . SIDE FRAME,RH	1	1
- 20	60-530051-1	. . . ACTUATOR.	1	1
		/ATTACHING PARTS/		
- 21	NAS221-30	. . . SCREW	2	
	¤AN960-10L	. . . WASHER.	2	
	¤MS20365-1032	. . . NUT	2	
		----*----		
- 22	60-530052	. . . HANDLE.	1	1
		/ATTACHING PARTS/		
- 23	¤MS171498	. . . ROLL PIN.	1	
		----*----		
- 24	60-530054-1	. . . GEAR RACK ASSY,SEAT BACK ADJUSTMENT . . .	1	1
		/ATTACHING PARTS/		
- 25	¤AN4-7A	. . . BOLT.	1	
	MS20365-428	. . . NUT	1	
		----*----		

FIG. & INDEX NO.	PART NO.	DESCRIPTION 1 2 3 4 5 6 7	UNITS PER ASSY	USABLE ON CODE
13E- 26	60-530041-1	. . . GEAR.	1	1
- 27	130498C19-39	. . SEAT BELT,PASSENGER CHAIR	1	1
- 28	CS40000W/265-4	. . . BUCKLE ASSY	1	1
- 29	¤D611A	. . . TIP	1	1
- 30	130569	. . PLATE,IDENTIFICATION.	1	1
		/ATTACHING PARTS/		
- 31	AN530-4R4	. . SCREW	2	
		----*----		
- 32	36-530023-17	. . EXTENSION,CHAIR BOTTOM.	1	1
		/ATTACHING PARTS/		
- 33	AN530-6R5	. . SCREW	10	
		----*----		
- 34	33-534027-11	. . PAN,CHAIR BACK.	1	1
- 35	96-534072-15	. . SEAT COVER ASSY	1	1
- 36	96-534072-11	. . BACK COVER ASSY	1	1
		/ATTACHING PARTS/		
- 37	¤NAS384-6-6P	. . SCREW	2	
	¤NAS391-6P	. . WASHER.	2	
		----*----		
- 38	¤AN227-6B	. . . BUTTON.	5	1
	¤AN227-7B	. . . SOCKET.	5	1
	¤AN227-8B	. . . STUD.	5	1
	¤AN227-9B	. . . EYELET.	5	1
- 39	NO NUMBER	. . CUSHION ASSY,SEAT BOTTOM.	NP	1
- 40	NO NUMBER	. . CUSHION ASSY,SEAT BACK.	NP	1
- 41	95-420017-5	TRACK,PASSENGER SEAT CENTER	2	1
- 42	95-420017-17	TRACK,PASSENGER SEAT INBOARD.	2	1
	95-420017-19	TRACK,PASSENGER SEAT OUTBOARD	2	1
- 43	¤414-180657-3	STOP,SEAT TRACK	16	1
		/ATTACHING PARTS/		
	¤NAS221-21	BOLT.	1	
	¤MS20365-1032	NUT	8	
		----*----		

CODE EFFECTIVITY

1 TD-708 AND AFTER

BLANK PAGE

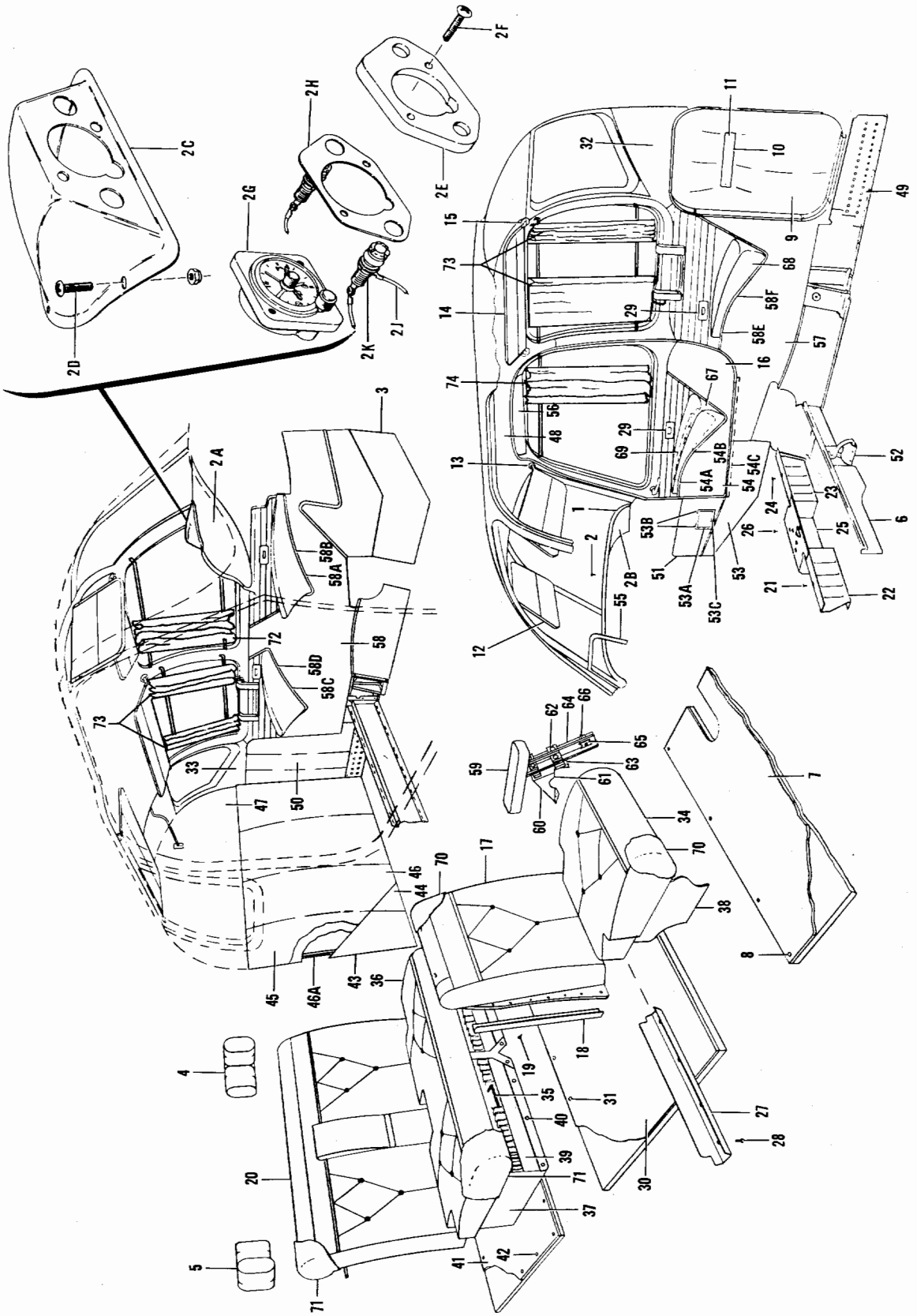

Figure 14. Cabin Upholstery and Soundproofing (TD-1 thru TD-302)

FIG. & INDEX NO.	PART NO.	DESCRIPTION 1 2 3 4 5 6 7	UNITS PER ASSY	USABLE ON CODE
		SOUNDPROOFING & UPHOLSTERY INSTL.		1
		SOUNDPROOFING & UPHOLSTERY INSTL /OPTIONAL/ . .		1
		SOUNDPROOFING & UPHOLSTERY INSTL /STANDARD/ . .		2
		SOUNDPROOFING & UPHOLSTERY INSTL /SUPER/. . . .		2
		SOUNDPROOFING & UPHOLSTERY INSTL.		2
		/STANDARD WITH AIR CONDITIONING/		
		SOUNDPROOFING & UPHOLSTERY INSTL.		2
		/SUPER WITH AIR CONDITIONING/		
		. SHIELD INSTL,DECK & GLARE		3
14 - 1	95-530011-9	. . SHIELD ASSY,DECK & GLARE.	1	3
		/ATTACHING PARTS/		
- 2	AN515B8R	. . SCREW	5	
	AN960B8	. . WASHER.	5	
		----*----		
- 2A	95-530011-21	. . . COVER,GLARE SHIELD.	1	3
- 2B	95-530011-23	. . . COVER,GLARE SHIELD.	1	3
		. . CLOCK INSTL,INSTRUMENT PANEL DECK		2
	NO NUMBER	. . . CLOCK ASSY,INSTRUMENT PANEL DECK.	1	2
- 2C	95-530012-1	. . . . COVER,DECK CLOCK.	1	2
		/ATTACHING PARTS/		
- 2D	AN515B832R	. . . . SCREW	3	
	MS20365-B832	. . . . NUT	3	
		----*----		
- 2E	95-530012-5	. . . . PANEL,DECK CLOCK.	1	2
		/ATTACHING PARTS/		
- 2F	AN515B632R	. . . . SCREW	2	
		----*----		
- 2G	35-380004-1	. . . . CLOCK,EIGHT DAY DECK /SEE FIG. 61 FOR .	1	2
		LOCATION ON INSTRUMENT PANEL/		
- 2H	95-530012-3	. . . . PLATE,DECK CLOCK.	1	2
- 2J	35316	. . . . TERMINAL,CLOCK GROUND WIRE.	1	2
- 2K	MS25010-3A	. . . . LIGHT,CLOCK PANEL	2	2
- 3	95-530000-25	. PANEL ASSY,SOUNDPROOFING.	1	3
	35-534304-642	. HEADREST ASSY,LH.	1	3
		/SPARE ASSY,SEE SECTION 4 FOR COMPONENTS/		
- 4		. HEADREST ASSY,LH.		3
	35-534304-643	. HEADREST ASSY,RH.	1	3
		/SPARE ASSY,SEE SECTION 4 FOR COMPONENTS/		
- 5		. HEADREST ASSY,RH.		3
- 6	35-534304-125	. PARTITION ASSY,SOUNDPROOFING.	1	3
- 7	95-530000-5	. CARPET ASSY,CABIN UPHOLSTERY.	1	3
		/ATTACHING PARTS/		
- 8	AN227-6	. BUTTON.	20	
	AN227-7	. SOCKET.	20	
		----*----		
- 9	35-534304-97	. PANEL ASSY,SOUNDPROOFING.	1	1
	35-534307-27	. PANEL ASSY,SOUNDPROOFING.	1	2
	35-534307-51	. WINDLACE.	1	2
	35-534307-61	. WINDLACE.	1	2
- 10	35-534315	. PLACARD,BAGGAGE LOADING	1	1
		/ATTACHING PARTS/		
- 11	NAS466-2	. NUT	2	
	AN530-6	. SCREW	2	
		----*----		
- 12	35-534304-139	. VISOR ASSY.	1	3
		/ATTACHING PARTS/		
- 13	NAS387-832-8P	. SCREW	6	
		----*----		
- 14	35-534304-141	. VISOR ASSY,/OPTIONAL/	1	3
		/ATTACHING PARTS/		
- 15	NAS387-832-8P	. SCREW	8	
		----*----		
	35-534306-15	. BACK ASSY,FRONT SEAT.	2	1
	35-534307-21	. BACK ASSY,FRONT SEAT.	2	2
	22	. . BUTTON,LOOP TYPE UPHOLSTERY	3	2
	NO NUMBER	. . TAPE,1-1/4 INCH JIFFY LOOP.	3	2
- 16	35-534304-15	. . PANEL,SOUNDPROOFING	1	1

FIG. & INDEX NO.	PART NO.	DESCRIPTION 1 2 3 4 5 6 7	UNITS PER ASSY	USABLE ON CODE
14 - 17	35-380013	CUSHION,FRONT SEAT BACK	1	1
	35-534307-45	CUSHION,FRONT SEAT BACK	1	2
- 18	35-534304-149	MOULDING,FRONT SEAT BACK	2	1
		/ATTACHING PARTS/		
- 19	NAS384-6-10	SCREW	2	
		----*----		
	35-534340-15	CORD ASSY,CHAIR POCKET ATTACHING	2	2
- 20	35-534306-25	BACK ASSY,REAR SEAT	1	1
	35-380015	CUSHION,REAR SEAT BACK	1	1
	35-534307-17	BACK ASSY,REAR SEAT LH	1	2
	35-534307-53	STRIP,REAR SEAT BACK	2	2
		/ATTACHING PARTS/		
	NAS384-6-10P	SCREW	4	
	NAS391-6P	WASHER	4	
		----*----		
	22	BUTTON,LOOP TYPE UPHOLSTERY	3	2
	NO NUMBER	TAPE,1-1/4 INCH JIFFY LOOP	3	2
	35-534307-18	BACK ASSY,REAR SEAT RH	1	2
	35-534307-53	STRIP,REAR SEAT BACK	2	2
		/ATTACHING PARTS/		
	NAS384-6-10P	SCREW	4	
	NAS391-6P	WASHER	4	
		----*----		
	22	BUTTON,LOOP TYPE UPHOLSTERY	3	2
	NO NUMBER	TAPE,1-1/4 INCH JIFFY LOOP	3	2
	95-534010	PARTITION ASSY,FRONT SEAT FWD	1	3
		/ATTACHING PARTS/		
- 21	AN530-6R	SCREW	22	
	AN960-6	WASHER	22	
		----*----		
- 22	95-534010-1	PANEL,PARTITION LH	1	3
- 23	95-534010-2	PANEL,PARTITION RH	1	3
		/ATTACHING PARTS/		
- 24	AN530-6R	SCREW	2	
	AN960-6	WASHER	2	
	NAS395-6-1	NUT	2	
		----*----		
	95-534010-5	PANEL ASSY,PARTITION CENTER	1	3
- 25	95-534010-3	PANEL,PARTITION CENTER	1	3
		/ATTACHING PARTS/		
- 26	AN530-6R	SCREW	3	
	AN960-6	WASHER	3	
	AN395-6-1	NUT	3	
		----*----		
- 27	35-534374	ANGLE,SEAT BOTTOM PILOT & COPILOT TRIM	2	3
		/ATTACHING PARTS/		
- 28	NAS387-632-7P	SCREW	4	
		----*----		
- 29	35-534242	ASH TRAY	4	3
- 30	95-530000-7	CARPET ASSY,UPHOLSTERY	1	3
		/ATTACHING PARTS/		
- 31	AN227-6	BUTTON	14	
	AN227-7	SOCKET	14	
		----*----		
- 32	35-534304-113	PANEL ASSY,UPHOLSTERY LH	1	3
- 33	35-534304-53	PANEL ASSY,UPHOLSTERY RH	1	3
	35-534306-17	BOTTOM ASSY,FRONT SEAT	2	1
	35-534307-23	BOTTOM ASSY,FRONT SEAT	2	2
- 34	35-380014	CUSHION,FRONT SEAT BOTTOM	1	1
	35-534307-43	CUSHION,FRONT SEAT BOTTOM	1	2
	35-534306-9	BOTTOM ASSY,REAR SEAT	1	1
	35-534307-7	BOTTOM ASSY,REAR SEAT	2	2
- 35	35-534340-11	CORD ASSY,CHAIR POCKET ATTACHING	1	3
- 36	35-380016	CUSHION,REAR SEAT BOTTOM	1	1
	35-534307-49	CUSHION,REAR SEAT BOTTOM	1	2

FIG. & INDEX NO.	PART NO.	DESCRIPTION 1 2 3 4 5 6 7	UNITS PER ASSY	USABLE ON CODE
14	35-534067	. COVER ASSY,REAR SPAR CARRY THRU STRUCTURE . .	1	1
		/ATTACHING PARTS/		
	AN227-8	. STUD,SNAP FASTENER.	10	
	AN227-9	. EYELET,SNAP FASTENER.	10	
		----*----		
	35-534067-2	. . COVER,REAR SPAR CARRY THRU STRUCTURE. . . .	1	1
		. COVER INSTL,REAR SEAT		3
	35-534295-1	. . PANEL ASSY,REAR SEAT COVER LH	1	3
	35-534295-2	. . PANEL ASSY,REAR SEAT COVER RH	1	3
- 37	35-534295-5	. . . PANEL,REAR SEAT COVER LH.	1	3
- 38	35-534295-6	. . . PANEL,REAR SEAT COVER RH.	1	3
- 39	35-534295-3	. . . COVER,REAR SEAT /LH ONLY/	1	3
		/ATTACHING PARTS/		
- 40	AN530-6R6	. . . SCREW	2	
		----*----		
- 41	95-530000-9	. CARPET ASSY,REAR.	1	3
		/ATTACHING PARTS/		
- 42	AN227-6	. BUTTON.	8	
	AN227-7	. SOCKET.	8	
		----*----		
- 43	35-534304-83	. PANEL ASSY,BAGGAGE AFT.	1	1
- 44	35-534304-99	. PANEL ASSY,BAGGAGE AFT.	1	1
	35-534307-57	. PANEL ASSY,BAGGAGE AFT.	1	2
- 45	35-534304-95	. PANEL ASSY,BAGGAGE AFT.	1	3
		/USED WITHOUT AIR CONDITIONING/		
- 46	35-534304-143	. PANEL ASSY,BAGGAGE AFT.	1	3
		/USED WITH AIR CONDITIONING/		
- 46A	35-534307-67	. SEAL,BAGGAGE AFT PANEL.	1	3
- 47	35-534304-57	. PANEL ASSY,BAGGAGE AFT UPPER.	1	3
		/USED WITHOUT AIR CONDITIONING/		
- 48	35-534305-63	. PANEL ASSY,CEILING.	1	3
		/USED WITHOUT AIR CONDITIONING/		
- 49	35-534304-101	. PANEL ASSY,REAR SCUFF RH.	1	1
	35-534307-63	. PANEL ASSY,REAR SCUFF RH.	1	2
- 50	35-534304-103	. PANEL ASSY,BAGGAGE LH	1	1
		. PANEL INSTL,BAGGAGE RH.		2
	NO NUMBER	. . PANEL ASSY,BAGGAGE RH	1	2
		/ATTACHING PARTS/		
	NAS384-6P	. . SCREW	13	
	COMM	. . WASHER,NUMBER 6 FINISH.	13	
	A-6077-6Z-1	. . NUT	6	
	A-1784-6Z-1	. . NUT	3	
		----*----		
	35-534313-9	. . . PANEL,BAGGAGE RH.	1	2
	35-534313-7	. . . DOUBLER,BAGGAGE RH PANEL.	1	2
	104036D-ZC1900	. . . STRIP,FELT.	1	2
- 51	95-530000-25	. PANEL ASSY,LH	1	3
- 52	35-534052	. BOOT ASSY,EMERGENCY HANDCRANK	1	3
- 53	95-530000-11	. PANEL ASSY,RH	1	1
	95-530000-35	. . PANEL,RH.	1	1
- 53A	35-534300-238	. . FRAME,PLACARD	1	1
		/ATTACHING PARTS/		
- 53B	AN515-6R6	. . SCREW	2	
- 53C	AN507-6-6	. . SCREW	1	
	AN960-6	. . WASHER.	3	
	AN365-632	. . NUT	3	
		----*----		
	95-530001-15	. PANEL ASSY,RH	1	2
	95-530001-21	. . PANEL,RH.	1	2
- 54	95-530000-13	. PANEL ASSY,DOOR RH.	1	1
	35-534364-2	. . MOULDING ASSY,DOOR PANEL METAL.	1	1
- 54A	35-534364-6	. . . CAP,DOOR PANEL MOULDING	1	1
- 54B	35-534364-10	. . . RETAINER,DOOR PANEL MOULDING.	1	1
	95-530001-13	. PANEL ASSY,DOOR RH.	1	2

FIG. & INDEX NO.	PART NO.	DESCRIPTION 1 2 3 4 5 6 7	UNITS PER ASSY	USABLE ON CODE
14	35-534382	. . INSIGNIA,CABIN INTERIOR	2	2
		/ATTACHING PARTS/		
	A-872-012-1	. . NUT	3	
		----*----		
	35-534364-2	. . MOULDING ASSY,DOOR PANEL METAL.	1	2
	35-534364-6	. . . CAP,DOOR PANEL MOULDING	1	2
	35-534364-10	. . . RETAINER,DOOR PANEL MOULDING.	1	2
- 54C	35-534306-31	. ANGLE,DOOR.	1	3
- 55	35-534304-121	. SEAL ASSY,STORM RH.	1	3
- 56	35-534304-93	. PANEL ASSY,DOOR TOP	1	3
- 57	35-534305-21	. PANEL ASSY,AFT RH	1	3
	95-530000-19	. PANEL ASSY,LH	1	1
	95-530000-45	. PANEL ASSY,LH	1	2
	95-530001-17	. PANEL ASSY,LH	1	2
- 58	95-530000-17	. . PANEL,LH.	1	1
	95-530000-43	. . PANEL,LH.	1	2
	95-530001-9	. . PANEL,LH.	1	2
	35-534364-1	. . MOULDING ASSY,SIDE PANEL METAL LH FRONT . .	1	1
- 58A	35-534364-5	. . . CAP,SIDE PANEL LH FRONT MOULDING.	1	1
- 58B	35-534364-9	. . . RETAINER,SIDE PANEL LH FRONT MOULDING . .	1	1
	95-530000-41	. . STRIP,SIDE PANEL LH FRONT TRIM.	1	2
	35-534364-3	. . MOULDING ASSY,SIDE PANEL METAL LH REAR. . .	1	1
- 58C	35-534364-7	. . . CAP,SIDE PANEL LH REAR MOULDING	1	1
- 58D	35-534364-11	. . . RETAINER,SIDE PANEL LH REAR MOULDING. . .	1	1
	35-534364-13	. . MOULDING ASSY,SIDE PANEL METAL LH REAR. . .	1	2
	35-534364-15	. . . CAP,SIDE PANEL LH REAR MOULDING	1	2
	35-534364-17	. . . RETAINER,SIDE PANEL LH REAR MOULDING. . .	1	2
	35-534364-4	. MOULDING ASSY,SIDE PANEL METAL RH REAR. . . .	1	3
- 58E	35-534364-8	. . CAP,SIDE PANEL RH REAR MOULDING	1	3
- 58F	35-534364-12	. . RETAINER,SIDE PANEL RH REAR MOULDING. . . .	1	3
		REST INSTL,ARM.		3
- 59	35-534372-1	. ARM ASSY,FRONT SEAT	1	3
	35-534372-5	. CATCH ASSY,FRONT SEAT ARMREST	1	3
	35-534372-25	. ANGLE,FRONT SEAT ARMREST.	1	3
	35-534372-3	. BRACKET ASSY,ARMREST.	1	3
- 60	35-534372-35	. . PLATE,ARM REST.	1	3
- 61	35-534372-31	. . PLATE,ARM REST.	1	3
		/ATTACHING PARTS/		
- 62	AN3-10A	. . BOLT.	2	
- 63	AN3-7A	. . BOLT.	2	
	AN960-416L	. . WASHER.	4	
		----*----		
- 64	35-534372-41	. WAY,ARM REST BRACKET.	2	3
- 65	50-534073-1	. CAM,ARM REST.	1	3
		/ATTACHING PARTS/		
- 66	AN525-832-11	. BOLT.	1	
	105739X-XR0221	. SPACER.	1	
	105739X-XR0150	. SPACER.	1	
	AN960-10L	. WASHER.	1	
	AN365-832	. NUT	1	
		----*----		
	35-534372-37	. COVER,FRONT SEAT ARM REST	1	3
		/ATTACHING PARTS/		
	AN530-8R6	. SCREW	2	
		----*----		
	35-534372-47	. COVER ASSY,FRONT SEAT ARM REST.	1	3
		/ATTACHING PARTS/		
	AN530-8R6	. SCREW	4	
	PK76XZ6-4	. SCREW	1	
	A1784-6Z-3	. NUT	1	
		----*----		
	35-534372-39	. . COVER,FRONT SEAT ARM REST	1	3
	35-534372-43	. . WELT ASSY,FRONT SEAT ARM REST	1	3

FIG. & INDEX NO.	PART NO.	DESCRIPTION 1 2 3 4 5 6 7	UNITS PER ASSY	USABLE ON CODE
		REST INSTL,ARM.		3
14 - 67	35-534243-1	. REST ASSY,FRONT RH.	1	3
- 68	35-534243-3	. REST ASSY,REAR RH	1	3
		/ATTACHING PARTS/		
- 69	NAS220	. SCREW	6	
	AN365-832	. NUT	6	
		----*----		
	35-534381	COVER ASSY,SEAT /OPTIONAL/.	1	2
		/USED ON FOUR PLACE AIRPLANE/		
- 70	35-534381-1	. COVER,FRONT SEAT.	2	2
- 71	35-534381-5	. COVER,REAR SEAT	1	2
	35-534381-9	COVER ASSY,SEAT /OPTIONAL/.	1	2
		/USED ON FIVE PLACE AIRPLANE/		
	35-534381-1	. COVER,FRONT SEAT.	1	2
	35-534381-11	. COVER,REAR SEAT	1	2
	35-534381-13	. COVER,JUMP SEAT	1	2
- 72	35-534221-15	CURTAIN ASSY,FRONT LH /SPARE ASSY/.	1	3
- 73	35-534220-27	CURTAIN ASSY,CENTER /SPARE ASSY/.	2	3
- 74	35-534222-15	CURTAIN ASSY,CABIN DOOR /SPARE ASSY/.	1	3

CODE	EFFECTIVITY	CODE	EFFECTIVITY
1	TD-1 THRU TD-173	2	TD-174 THRU TD-302
3	TD-1 THRU TD-302		

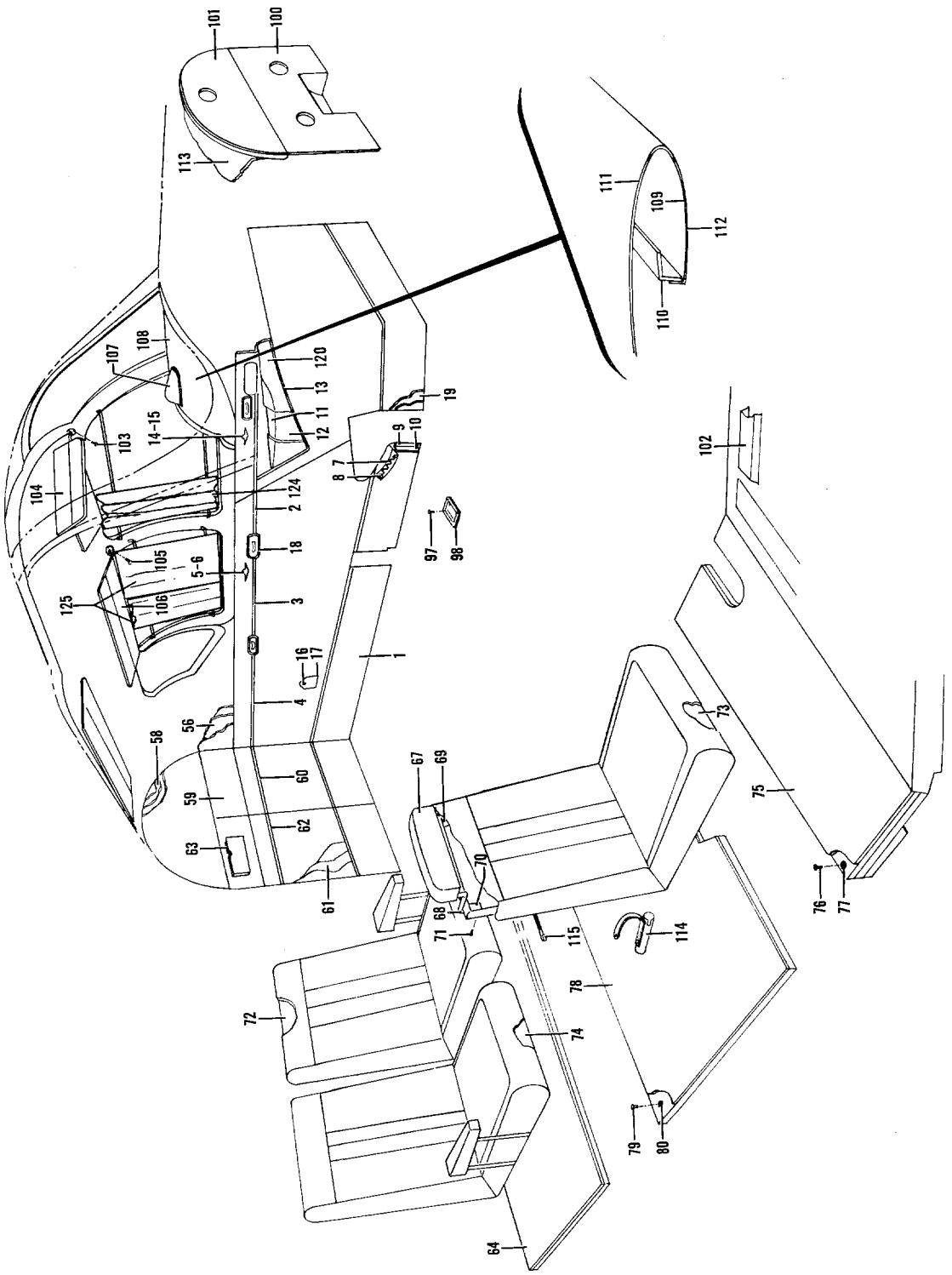

Figure 14A. Cabin Upholstery and Soundproofing (TD-303 thru TD-452) (Sht. 1 of 2 Shts.)

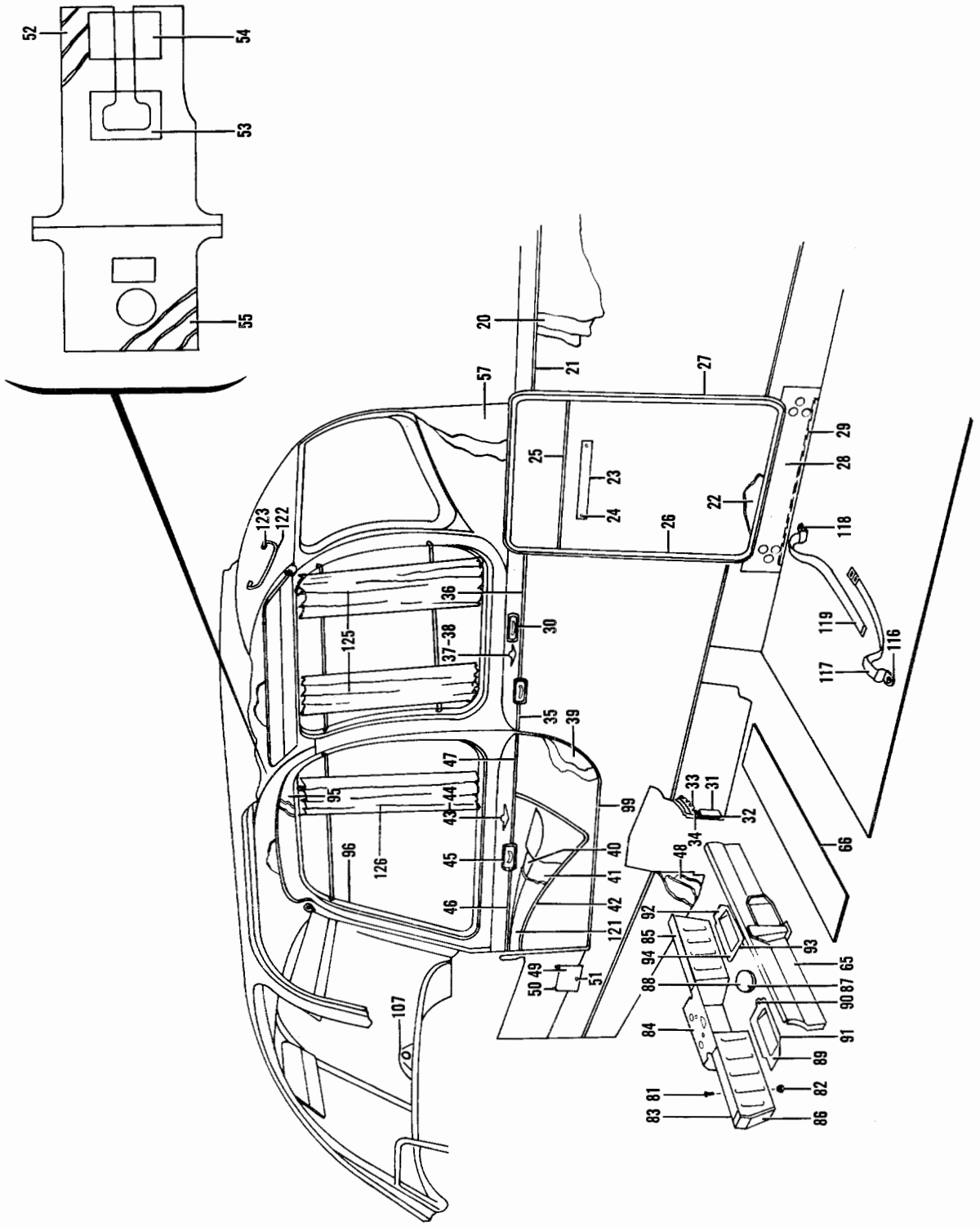

Figure 14A. Cabin Upholstery and Soundproofing (TD-303 thru TD-452) (Sht. 2 of 2 Shts.)

FIG. & INDEX NO.	PART NO.	DESCRIPTION 1 2 3 4 5 6 7	UNITS PER ASSY	USABLE ON CODE
		UPHOLSTERY & SOUNDPROOFING INSTL,B95.		1
		/STANDARD SOUNDPROOFING WITHOUT AIR OUTLETS/		
		UPHOLSTERY & SOUNDPROOFING INSTL,B95.		1
		/STANDARD SOUNDPROOFING WITH AIR OUTLETS/		
		UPHOLSTERY & SOUNDPROOFING INSTL,B95.		1
		/SUPER SOUNDPROOFING WITHOUT AIR OUTLETS/		
		UPHOLSTERY & SOUNDPROOFING INSTL,B95.		1
		/SUPER SOUNDPROOFING WITH AIR OUTLETS/		
14A-	95-530002-21	. PANEL ASSY,LH	1	1
- 1	95-530002-15	. . PANEL,LH.	1	1
- 2	35-534388-29	. . STRIP,LH PANEL FWD.	1	1
- 3	35-534388-21	. . STRIP,LH PANEL MIDDLE	1	1
- 4	35-534388-23	. . STRIP,LH REAR PANEL REAR.	1	1
- 5	35-534382	. . INSIGNIA,CABIN INTERIOR	1	1
		/ATTACHING PARTS/		
- 6	A872-012-1	. . NUT	3	
		----*----		
- 7	35-534201-2	. . ANGLE,FRONT SEAT REAR PARTITION UPPER LH. .	1	1
		/ATTACHING PARTS/		
- 8	A1784-6Z1	. . NUT	2	
		----*----		
- 9	35-534202-2	. . ANGLE,FRONT SEAT REAR PARTITION LOWER LH. .	1	1
		/ATTACHING PARTS/		
- 10	A1784-6Z1	. . NUT	1	
		----*----		
- 11	35-534305-9	. . TOP,LH ARM REST	1	1
- 12	35-534305-13	. . SIDE,LH ARM REST.	1	1
- 13	95-530000-41	. . TRIM,LH PANEL	1	1
- 14	35-534382	. . INSIGNIA,CABIN INTERIOR	1	1
		/ATTACHING PARTS/		
- 15	A872-012-1	. . NUT	3	
		----*----		
	95-530002-113	. PANEL ASSY,STATIC AIR LINE DRAIN DOOR	1	1
	95-530002-111	. . DOOR ASSY,STATIC AIR LINE DRAIN	1	1
		/ATTACHING PARTS/		
- 16	NAS384-6	. . SCREW	1	
	NAS391-6	. . WASHER.	1	
	A1785-6Z-1	. . NUT	1	
		----*----		
- 17	35-410094-10	. . . DOOR,STATIC AIR LINE DRAIN.	1	1
- 18	35-534242	. ASH TRAY.	5	1
	95-530002-31	. PANEL ASSY,LH LOWER FWD	1	1
- 19	95-530000-27	. . PANEL,LH LOWER FWD.	1	1
	95-530002-25	. PANEL ASSY,RH REAR.	1	1
- 20	95-530002-9	. . PANEL,RH REAR	1	1
- 21	35-534388-31	. . STRIP,RH REAR PANEL	1	1
	95-530002-79	. PANEL ASSY,BAGGAGE DOOR	1	1
		/ATTACHING PARTS/		
	1195	. FASTENER,UPHOLSTERY	32	
		----*----		
- 22	95-530002-101	. . PANEL,BAGGAGE DOOR.	1	1
- 23	95-534026	. . PLACARD,BAGGAGE COMPARTMENT LOADING	1	1
		INSTRUCTION		
		/ATTACHING PARTS/		
- 24	AN530-6	. . SCREW	2	
	NAS446-2	. . NUT	2	
		----*----		
- 25	35-534388-11	. . STRIP,BAGGAGE DOOR PANEL.	1	1
- 26	95-530002-27	. WINDLACE,BAGGAGE DOOR	1	1
- 27	95-530002-29	. WINDLACE,BAGGAGE DOOR	1	1
	95-530002-91	. PANEL ASSY,RH REAR SCUFF.	1	1
- 28	95-530002-89	. . PANEL,RH REAR SCUFF	1	1
- 29	104036D-ZC1900	. . STRIP,FELT.	1	1
	95-530002-11	. PANEL ASSY,RH MIDDLE.	1	1
- 30	95-530002-23	. . PANEL,RH MIDDLE	1	1

FIG. & INDEX NO.	PART NO.	DESCRIPTION 1 2 3 4 5 6 7	UNITS PER ASSY	USABLE ON CODE
14A- 31	35-534202-3	. . ANGLE,FRONT SEAT REAR PARTITION LOWER RH. . /ATTACHING PARTS/	1	1
- 32	A1784-6Z1	. . NUT	1	
		----*----		
- 33	35-534201-3	. . ANGLE,FRONT SEAT REAR PARTITION UPPER RH. . /ATTACHING PARTS/	1	1
- 34	A1784-6Z-1	. . NUT	2	
		----*----		
- 35	35-534388-7	. . STRIP,RH MIDDLE PANEL FWD	1	1
- 36	35-534388-9	. . STRIP,RH MIDDLE PANEL REAR.	1	1
- 37	35-534382	. . INSIGNIA,CABIN INTERIOR . . . . . /ATTACHING PARTS/	1	1
- 38	A872-012-1	. . NUT	3	
		----*----		
	35-534308-13	. PANEL ASSY,DOOR	1	1
- 39	35-534305-35	. . PANEL,DOOR.	1	1
- 40	35-534305-41	. . TOP,DOOR PANEL ARM REST	1	1
- 41	35-534305-13	. . SIDE,DOOR PANEL ARM REST.	1	1
- 42	35-534387-5	. . TRIM,DOOR PANEL MOULDING.	1	1
- 43	35-534382	. . INSIGNIA,CABIN INTERIOR . . . . . /ATTACHING PARTS/	1	1
- 44	A872-012-1	. . NUT	3	
		----*----		
- 45	35-534242	. . RECEIVER ASSY,ASH	1	1
- 46	35-534388-13	. . TRIM,DOOR PANEL FWD	1	1
- 47	35-534388-15	. . TRIM,DOOR PANEL REAR.	1	1
	95-530002-13	. PANEL ASSY,RH FWD	1	1
- 48	95-530001-21	. . PANEL,RH FWD.	1	1
- 49	35-534300-238	. . FRAME,PLACARD . . . . . /ATTACHING PARTS/	1	1
- 50	AN515-6R6	. . SCREW	2	
- 51	AN507-6-6	. . SCREW	1	
	AN960-6	. . WASHER.	3	
	AN365-632	. . NUT	3	
		----*----		
	95-530002-71	. PANEL ASSY,HEADLINER AFT. . . . . /USED WITHOUT AIR OUTLETS/	1	1
- 52	95-530002-33	. . PANEL,HEADLINER AFT . . . . . /USED WITHOUT AIR OUTLETS/	1	1
- 53	95-530002-103	. . PANEL,AFT HEADLINER ALUMINUM FWD. . . . . /USED WITHOUT AIR OUTLETS/	1	1
- 54	95-530002-105	. . PANEL,AFT HEADLINER ALUMINUM AFT. . . . . /USED WITHOUT AIR OUTLETS/	1	1
	95-530002-67	. PANEL ASSY,HEADLINER AFT. . . . . /USED WITH AIR OUTLETS/	1	1
	95-530002-33	. . PANEL,HEADLINER AFT /USED WITH AIR OUTLETS/	1	1
	95-530002-99	. PANEL ASSY,HEADLINER FWD.	1	1
- 55	95-530002-97	. . PANEL,HEADLINER FWD	1	1
	95-530002-65	. PANEL ASSY,UPPER LH REAR.	1	1
- 56	95-530002-63	. . PANEL,UPPER LH REAR	1	1
	95-530002-61	. PANEL ASSY,UPPER RH REAR.	1	1
- 57	95-530002-59	. . PANEL,UPPER RH REAR	1	1
	95-530002-51	. PANEL ASSY,BAGGAGE AFT UPPER.	1	1
- 58	95-530002-49	. . PANEL,BAGGAGE AFT UPPER	1	1
- 59	95-530002-47	. PANEL ASSY,BAGGAGE AFT LH	1	1
- 60	35-534388-25	. . STRIP,BAGGAGE AFT PANEL LH.	1	1
	95-530002-57	. PANEL ASSY,BAGGAGE AFT RH	1	1
- 61	95-530002-55	. . PANEL,BAGGAGE AFT RH.	1	1
- 62	35-534388-27	. . STRIP,BAGGAGE AFT PANEL RH.	1	1
- 63	35-534300-308	. . HOLDER,CARD	1	1
- 64	95-530002-53	. CARPET ASSY,REAR.	1	1
	95-530002-77	. PARTITION ASSY,CABIN UPHOLSTERY	1	1
- 65	35-534191-11	. . PARTITION ASSY,CABIN UPHOLSTERY	1	1
	95-530002-73	. COVER ASSY,REAR SPAR CARRY THRU STRUCTURE . .	1	1
	95-534020	. . COVER ASSY,REAR SPAR CARRY THRU STRUCTURE .	1	1
- 66	95-534020-1	. . . COVER ASSY,REAR SPAR CARRY THRU STRUCTURE	1	1

FIG. & INDEX NO.	PART NO.	DESCRIPTION 1 2 3 4 5 6 7	UNITS PER ASSY	USABLE ON CODE
14A-	95-534028-11	PILLOW & TUBE ASSY,HEADREST /STANDARD INSTL/	1	1
- 67	95-534028-9	PILLOW,HEADREST	1	1
- 68	95-534028-1	TUBE,HEADREST	1	1
- 69	95-534028-7	PLATE ASSY,HEADREST BRACKET LH /STANDARD INSTL/	4	1
- 70	95-534028-8	PLATE ASSY,HEADREST BRACKET RH /STANDARD INSTL/ /ATTACHING PARTS/	4	1
- 71	NAS384-6P	SCREW	3	
	NAS391-6P	WASHER	3	
		----*----		
	95-530002-35	CUSHION ASSY,SEAT BACK	4	1
- 72	95-530002-37	CUSHION,SEAT BACK	1	1
	95-530002-117	CUSHION ASSY,FRONT SEAT BOTTOM	2	1
- 73	95-530002-115	CUSHION,FRONT SEAT BOTTOM	1	1
	95-530002-39	CUSHION ASSY,REAR SEAT BOTTOM	2	1
- 74	95-530002-41	CUSHION,REAR SEAT BOTTOM	1	1
- 75	95-530000-5	CARPET ASSY,FWD /ATTACHING PARTS/	1	1
- 76	AN227-6	FASTENER,BUTTON SNAP	20	
- 77	AN227-7	FASTENER,SOCKET SNAP	20	
		----*----		
- 78	95-530000-7	CARPET ASSY,MIDDLE /ATTACHING PARTS/	1	1
- 79	AN227-6	FASTENER,BUTTON SNAP	14	
- 80	AN227-7	FASTENER,SOCKET SNAP	14	
		----*----		
		PARTITION INSTL,FRONT SEAT FWD /ATTACHING PARTS/		1
- 81	AN530-6R	SCREW	22	
	AN960-6	WASHER	22	
- 82	NAS395-6-1	NUT	5	
		----*----		
	NO NUMBER	PARTITION ASSY,FRONT SEAT FWD	1	1
- 83	95-534010-1	PANEL,PARTITION LH	1	1
	95-534010-5	PANEL ASSY,PARTITION CENTER	1	1
- 84	95-534010-3	PANEL,PARTITION CENTER	1	1
- 85	95-534010-2	PANEL,PARTITION RH	1	1
- 86	112416-01024	EXTRUSION,PARTITION	2	1
		COVER INSTL,FRONT SEAT STRUCTURE		1
	NO NUMBER	COVER ASSY,FRONT SEAT STRUCTURE /ATTACHING PARTS/	1	1
- 87	AN530-6R6	SCREW	2	
		----*----		
- 88	35-534295-3	COVER,FRONT SEAT STRUCTURE	1	1
	33-534015-1	PANEL ASSY,FRONT SEAT STRUCTURE LH /ATTACHING PARTS/	1	1
- 89	AN530-6R6	SCREW	1	
- 90	AN530-6R8	SCREW	1	
	A1784-6Z-3	NUT	1	
		----*----		
- 91	33-534015-3	PANEL,FRONT SEAT STRUCTURE LH	1	1
	33-534015-2	PANEL ASSY,FRONT SEAT STRUCTURE RH /ATTACHING PARTS/	1	1
- 92	AN530-6R6	SCREW	1	
- 93	AN530-6R8	SCREW	1	
	A1784-6Z-3	NUT	1	
		----*----		
- 94	33-534015-4	PANEL,FRONT SEAT STRUCTURE RH	1	1
	35-534304-93	PANEL ASSY,DOOR TOP	1	1
- 95	35-534304-79	PANEL,DOOR TOP	1	1
- 96	95-530002-75	SEAL,DOOR UPPER	1	1
	33-530000-57	PAN ASSY,FLOOR /ATTACHING PARTS/	1	1
- 97	NAS384-6-12P	SCREW	4	
		----*----		

FIG. & INDEX NO.	PART NO.	DESCRIPTION 1 2 3 4 5 6 7	UNITS PER ASSY	USABLE ON CODE
14A- 98	35-415380-22	. . PAN,FLOOR	1	1
- 99	35-534306-31	. ANGLE,CABIN DOOR LOWER.	1	1
	35-534304-147	. KIT,SUPER SOUNDPROOF.	1	1
		/USED WITH SUPER SOUNDPROOFING/		
-100	95-530000-21	. PANEL ASSY,FIREWALL LOWER	1	1
-101	95-530000-23	. PANEL ASSY,FIREWALL UPPER	1	1
-102	35-534305-55	. BOOT,RUDDER PEDAL	8	1
	35-534305-65	. BOOT,RUDDER PEDAL	8	1
		/ALTERNATE FOR 35-534305-55/		
	35-534304-139	. VISOR ASSY,FRONT SUN.	2	1
		/ATTACHING PARTS/		
-103	NAS387-832-8P	. SCREW	3	
		----*----		
-104	35-534079-24	. . VISOR,FRONT SUN	1	1
	35-534304-141	. VISOR ASSY,REAR SUN /OPTIONAL/.	2	1
		/ATTACHING PARTS/		
-105	NAS387-832-8P	. SCREW	4	
		----*----		
-106	35-534090-26	. . VISOR,REAR SUN /OPTIONAL/	1	1
-107	50-380013-5	. CLOCK,EIGHT DAY DECK /SUPERCEDES 35-380004-5/	1	1
		. SHIELD INSTL,DECK & GLARE		1
-108	95-530011-27	. . SHIELD ASSY,DECK & GLARE.	1	1
-109	95-530011-3	. . . COVER,DECK & GLARE SHIELD ROYALITE. . . .	1	1
-110	95-530011-7	. . . ANGLE,DECK & GLARE SHIELD	1	1
-111	95-530011-29	. . . COVER,GLARE SHIELD NAUGAHYDE.	1	1
-112	95-530011-31	. . . COVER,GLARE SHIELD NAUGAHYDE.	1	1
-113	95-530000-33	. WRAPPER,COWL.	1	1
-114	35-534052	. BOOT ASSY,LANDING GEAR EMERGENCY HAND CRANK .	1	1
-115	35-534340-15	. CORD ASSY,CHAIR POCKET ATTACHING.	4	1
	95-530002-95	. STRAP ASSY,BAGGAGE TIE DOWN LH.	3	1
		/ATTACHING PARTS/		
	AN525-10	. SCREW	AR	
		----*----		
-116	1954	. . CLIP & DEE,BAGGAGE TIE DOWN STRAP	1	1
-117	111191-06000	. . STRAP ASSY,BAGGAGE TIE DOWN LH.	1	1
	95-530002-93	. STRAP ASSY,BAGGAGE TIE DOWN RH.	3	1
		/ATTACHING PARTS/		
	AN525-10	. SCREW	AR	
		----*----		
-118	1954	. . CLIP & DEE,BAGGAGE TIE DOWN STRAP	1	1
-119	111192-02400	. . STRAP ASSY,BAGGAGE TIE DOWN RH.	1	1
		ARMREST INSTL		1
-120	35-534243-25	. ARMREST,LH.	1	1
-121	35-534243-1	. ARMREST,RH.	1	1
		HANGER INSTL,COAT		1
-122	95-534027-3	. TUBE,COAT HANGER.	1	1
		/ATTACHING PARTS/		
-123	NAS387-10P	. SCREW	2	
		----*----		
-124	35-534221-15	CURTAIN ASSY,FRONT LH	1	1
-125	35-534220-27	CURTAIN ASSY,CENTER	2	1
-126	35-534222-15	CURTAIN ASSY,CABIN DOOR	1	1

CODE EFFECTIVITY

1 TD-303 THRU TD-452

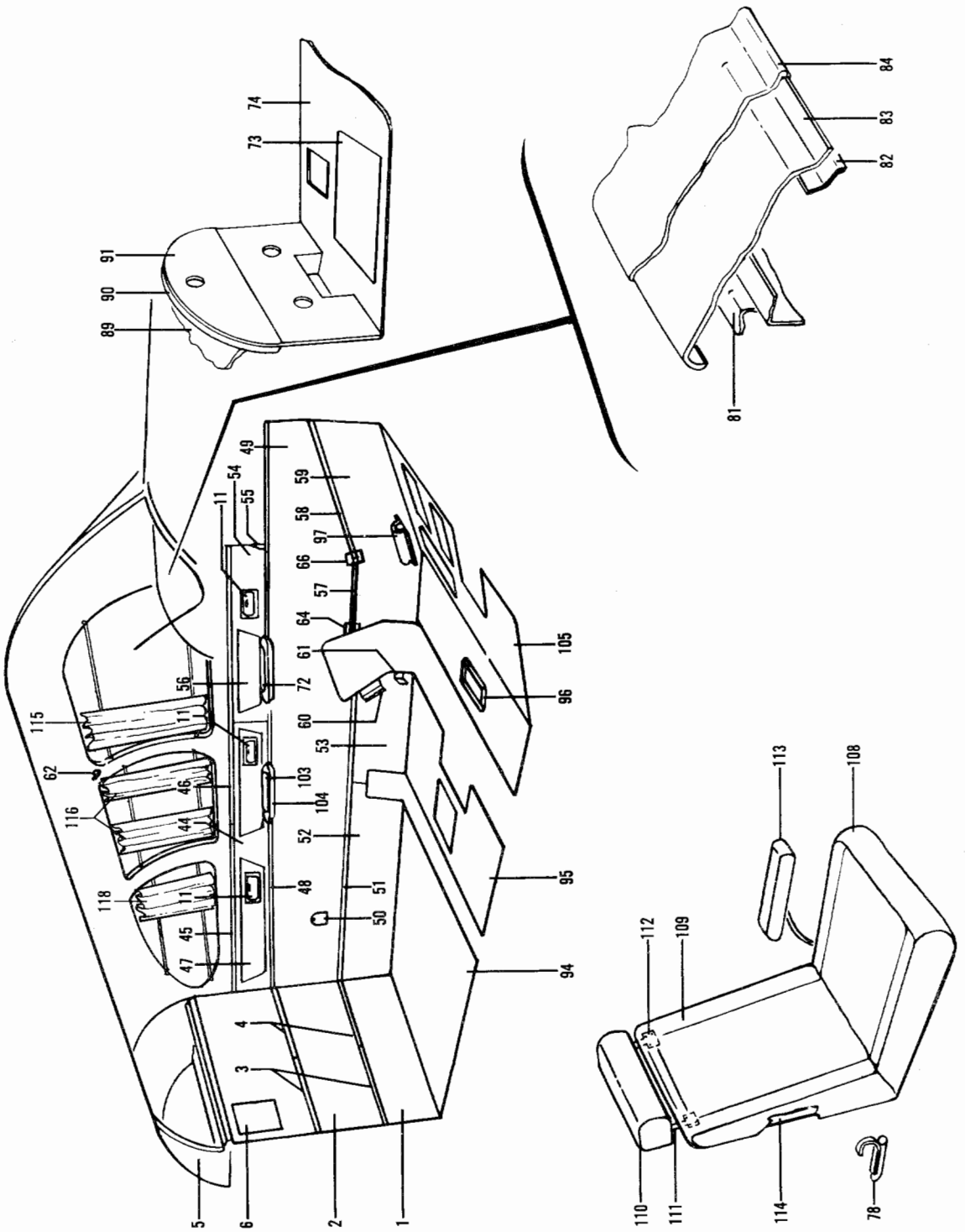

Figure 14B. Cabin Upholstery & Soundproofing (TD-453 thru TD-533) (Sht. 1 of 2 Shts.)

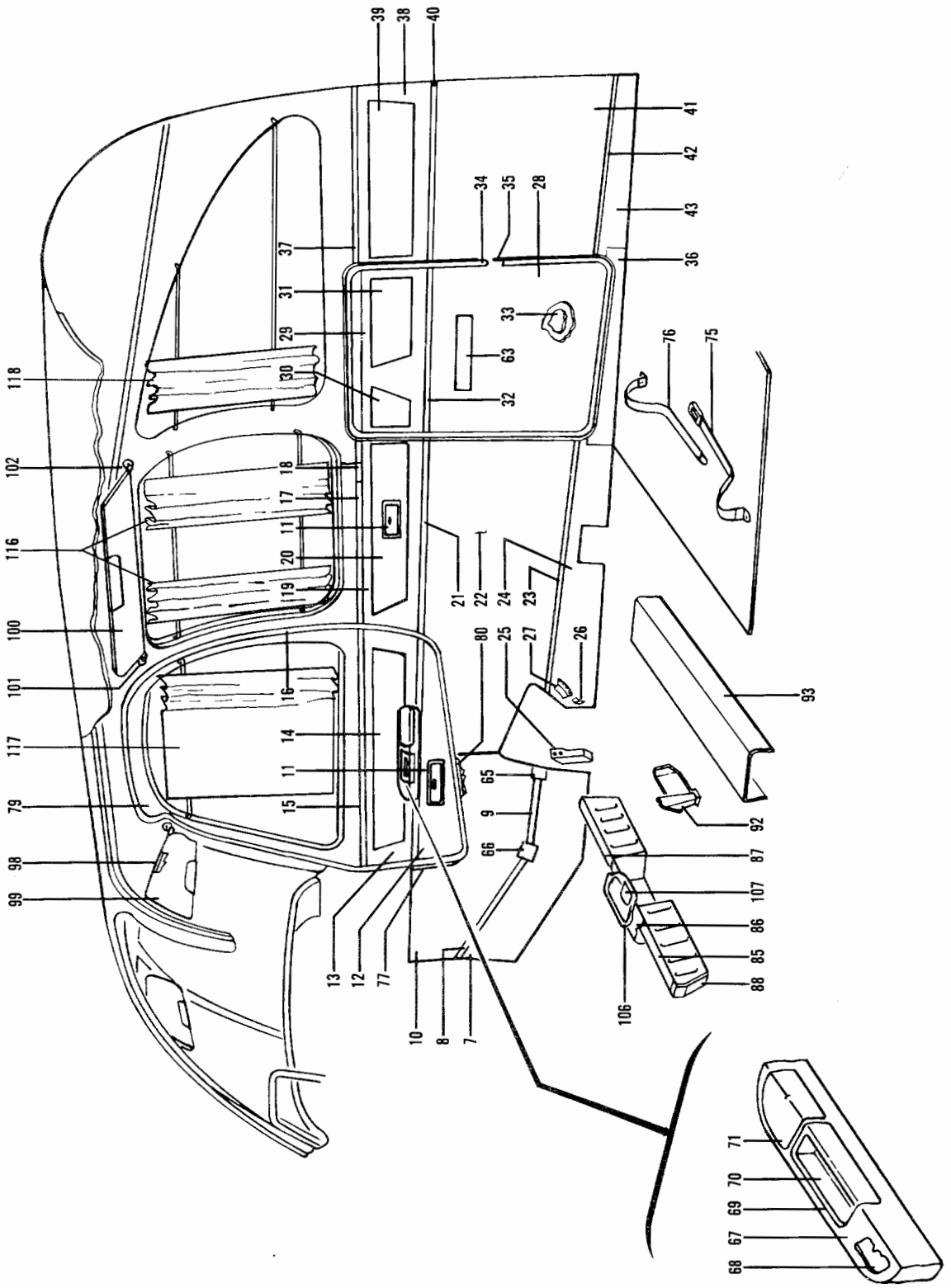

Figure 14B. Cabin Upholstery & Soundproofing (TD-453 thru TD-533) (Sht. 2 of 2 Shts.)

FIG. & INDEX NO.	PART NO.	DESCRIPTION 1 2 3 4 5 6 7	UNITS PER ASSY	USABLE ON CODE
		UPHOLSTERY & SOUNDPROOFING INSTL,B95A		1
		UPHOLSTERY & SOUNDPROOFING INSTL,B95A		2
		UPHOLSTERY & SOUNDPROOFING INSTL,B95A		1
		UPHOLSTERY & SOUNDPROOFING INSTL,B95A		2
14B- 1	95-530003-31	PANEL ASSY,REAR	1	3
- 2	95-530003-33	PANEL ASSY,REAR	1	3
- 3	96-530001-127	TRIM	2	3
- 4	96-530001-129	TRIM	2	3
- 5	96-534011-3	SHELF,HAT	1	3
- 6	118650	HOLDER	1	3
- 7	95-530003-13	PANEL ASSY	1	3
- 8	96-530001-85	TRIM	1	3
- 9	96-530001-79	TRIM	1	3
- 10	95-530003-69	PANEL ASSY	1	3
- 11	35-534242	ASHTRAY	5	3
- 12	95-530003-17	PANEL ASSY	1	3
- 13	95-530013-5	PANEL ASSY	1	1
- 14	95-530003-67	PANEL ASSY	1	1
- 15	96-530001-75	TRIM	1	3
- 16	96-530001-105	GIMP ASSY,CABIN DOOR	1	3
- 17	96-530001-65	TRIM	1	3
- 18	96-530001-227	TRIM	1	3
- 19	95-530013-7	PANEL ASSY	1	3
- 20	95-530003-63	PANEL ASSY	1	3
- 21	96-530001-67	TRIM	1	3
- 22	95-530003-19	PANEL ASSY	1	3
- 23	96-530001-69	TRIM	1	3
- 24	95-530003-15	PANEL ASSY	1	3
- 25	35-534300-112	ANGLE,FRONT SEAT PARTITION	1	3
- 26	35-534202-3	ANGLE,FRONT SEAT PARTITION	1	3
- 27	35-534201-3	ANGLE,FRONT SEAT PARTITION	1	3
- 28	95-530003-23	PANEL ASSY	1	3
- 29	95-530013-9	PANEL ASSY	1	3
- 30	96-530003-59	PANEL ASSY	1	3
- 31	96-530003-55	PANEL ASSY	1	3
- 32	96-530001-57	TRIM	1	3
- 33	96-530001-51	PANEL	1	3
- 34	35-534406-87	SEAL	1	3
- 35	96-530001-147	SEAL	1	3
- 36	96-530001-209	PANEL	1	3
- 37	96-530001-45	TRIM	1	3
- 38	95-530013-11	PANEL	1	3
- 39	95-530003-51	PANEL ASSY	1	3
- 40	96-530001-41	TRIM	1	3
- 41	95-530003-29	PANEL ASSY	1	3
- 42	96-530001-43	TRIM	1	3
- 43	95-530003-27	PANEL ASSY	1	3
- 44	95-530013-3	PANEL	1	3
- 45	96-530001-229	TRIM	1	3
- 46	96-530001-23	TRIM	1	3
- 47	95-530003-47	PANEL ASSY	2	3
- 48	96-530001-25	TRIM	1	3
- 49	95-530003-9	PANEL ASSY	1	3
- 50	95-530002-113	DOOR ASSY,STATIC AIR LINE DRAIN	1	3
- 51	96-530001-27	TRIM	1	3
- 52	95-530003-11	PANEL ASSY	1	3
- 53	95-530003-39	PANEL ASSY	1	3
- 54	95-530013-1	PANEL	1	3
- 55	96-530001-137	PANEL	1	3
- 56	95-530003-43	PANEL ASSY	1	1
- 57	96-530001-13	TRIM	1	1
- 58	96-530001-11	TRIM	1	3
- 59	95-530003-7	PANEL ASSY	1	3

FIG. & INDEX NO.	PART NO.	DESCRIPTION 1 2 3 4 5 6 7	UNITS PER ASSY	USABLE ON CODE
14B- 60	35-534201-2	ANGLE	1	3
- 61	35-534202-2	ANGLE	1	3
- 62	46014476	HOOK,PILOTS COAT HANGER	1	3
		/ATTACHING PARTS/		
	NAS384-8-10P	SCREW	1	
		----*----		
- 63	96-534046	PLACARD,BAGGAGE COMPARTMENT LOADING	1	3
- 64	96-530001-219	CLIP	1	3
- 65	96-530001-220	CLIP	1	3
- 66	96-530001-221	STRAP	2	3
- 67	95-530003-99	PAD ASSY	1	4
- 68	95-530003-93	ARMREST ASSY	1	4
- 69	35-534244	CUP	1	4
		/ATTACHING PARTS/		
	NAS384-6	SCREW	2	
		----*----		
	95-530003-107	PANEL ASSY,RECESSED RH	1	2
- 70	95-530016	. PULL,DOOR	1	2
		/ATTACHING PARTS/		
	NAS385-6-8P	. SCREW	2	
	NAS391-6P	. WASHER	2	
		----*----		
- 71	95-530003-115	. PAD ASSY	1	2
	95-530003-105	PANEL ASSY,RECESSED LH	1	2
- 72	96-530001-17	. PAD ASSY,ARMREST	1	2
- 73	95-530003-133	CARPET	1	5
- 74	95-530003-131	CARPET	1	5
- 75	95-530002-93	STRAP ASSY,BAGGAGE TIE DOWN LH	3	3
- 76	95-530002-95	STRAP ASSY,BAGGAGE TIE DOWN RH	3	3
- 77	95-530002-81	FILLER	1	3
- 78	35-534052	BOOT ASSY,LANDING GEAR HAND CRANK	1	3
- 79	35-534304-93	PANEL ASSY,DOOR TOP	1	3
- 80	35-534306-31	SEAL,CABIN DOOR	1	3
	95-530014-1	GLARE SHIELD ASSY	1	6
	95-530014-13	GLARE SHIELD ASSY	1	7
		/ATTACHING PARTS/		
	AN515-8R	SCREW	5	
	AN960-8	WASHER	5	
		----*----		
- 81	95-530014-3	. ANGLE	1	3
- 82	95-530014-5	. CLIP	1	3
- 83	95-530014-7	. DECK	1	3
- 84	95-530014-9	. COVER	1	7
		COVER INSTL,FRONT SPAR		3
- 85	95-534010-1	. PANEL,LH	1	3
	95-534010-5	. PANEL ASSY,CENTER	1	3
- 86	95-534010-3	. . PANEL,CENTER	1	3
- 87	95-534010-2	. . PANEL,RH	1	3
- 88	112416-01024	. EXTRUSION	2	3
- 89	95-530000-33	WRAPPER,COWL	1	3
- 90	95-530000-23	BLANKET ASSY,FIREWALL	1	3
- 91	95-530000-21	PANEL ASSY,FIREWALL	1	3
- 92	35-534309-17	PARTITION ASSY,FRONT SEAT	1	3
- 93	95-530002-73	COVER ASSY,REAR SPAR CARRY THRU	1	3
- 94	95-530002-53	CARPET ASSY,REAR	1	3
- 95	35-534305-39	CARPET ASSY,MIDDLE	1	3
- 96	33-530000-57	PAN ASSY,FLOOR	1	3
		/ATTACHING PARTS/		
	NAS384-6-12P	SCREW	4	
		----*----		
- 97	35-534305-65	BOOT,RUDDER PEDAL	4	3
	35-534305-55	BOOT,RUDDER PEDAL	4	3
		/ALTERNATE FOR 35-534305-65/		

FIG. & INDEX NO.	PART NO.	DESCRIPTION 1 2 3 4 5 6 7	UNITS PER ASSY	USABLE ON CODE
14B-	35-534304-139	VISOR ASSY,FRONT SUN	2	3
		/ATTACHING PARTS/		
	NAS387-832-8	SCREW	8	
		----*----		
	35-534079-24	VISOR ASSY	1	3
- 98	35-534079-14	WELD ASSY,ROD	1	3
		/ATTACHING PARTS/		
	100943CR-ZX020F	SPRING	1	
	AN960-10L	WASHER	1	
	AN365-1032	NUT	1	
		----*----		
- 99	35-534079-2	SHADE	1	3
	35-534304-141	VISOR ASSY,SIDE SUN	1	3
		/ATTACHING PARTS/		
	NAS387-832-8P	SCREW	8	
		----*----		
	35-534090-26	VISOR ASSY	1	3
-100	35-534090-2	SHADE	1	3
-101	35-534090-16	WELD ASSY,LH	1	3
-102	35-534090-17	WELD ASSY,RH	1	3
-103	33-530002-77	CUSHION,REAR SEAT ARMREST	2	3
-104	33-534018-1	ARMREST ASSY,REAR SEAT	2	3
-105	95-530003-73	CARPET ASSY,FRONT	1	3
-106	96-920013	COVER,FUEL SELECTOR VALVE	1	2
		/ATTACHING PARTS/		
	AN530-6R	SCREW	16	
	AN960-6	WASHER	16	
	NAS395-6-1	NUT	5	
	PK65A-4-6	SCREW	1	
		----*----		
-107	33-340000-61	COVER	1	2
		/ATTACHING PARTS/		
	PK76XZ6-4	SCREW	1	
		----*----		
-108	95-530003-5	CUSHION ASSY,BOTTOM LH	2	3
	95-530003-7	CUSHION ASSY,BOTTOM RH	2	3
-109	95-530003-3	CUSHION ASSY,BACK	4	3
	95-534028-11	HEADREST ASSY	1	3
-110	95-534028-9	PILLOW ASSY	1	3
-111	95-534028-1	TUBE	1	3
-112	95-534028-7	PLATE,LH ATTACHING	1	3
	95-534028-8	PLATE,RH ATTACHING	1	3
		/ATTACHING PARTS/		
	NAS384-6P	SCREW	3	
	NAS391-6P	WASHER	3	
		----*----		
-113	95-534030-3	ARMREST ASSY,LH	2	3
	95-534030-4	ARMREST ASSY,RH	2	3
-114	96-534010	PANEL ASSY,SEAT BACK	4	3
-115	35-534221-15	CURTAIN ASSY,FRONT LH	1	3
-116	35-534220-27	CURTAIN ASSY,CENTER	2	3
-117	35-534222-15	CURTAIN ASSY,CABIN DOOR	1	3
-118	35-534409-5	CURTAIN ASSY,LARGE REAR WINDOW	2	3

CODE	EFFECTIVITY	CODE	EFFECTIVITY
1	TD-453 THRU TD-497	2	TD-498 THRU TD-533
3	TD-453 THRU TD-533	4	TD-486 THRU TD-533
5	TD-512 THRU TD-533	6	TD-453 THRU TD-493
7	TD-494 THRU TD-533		

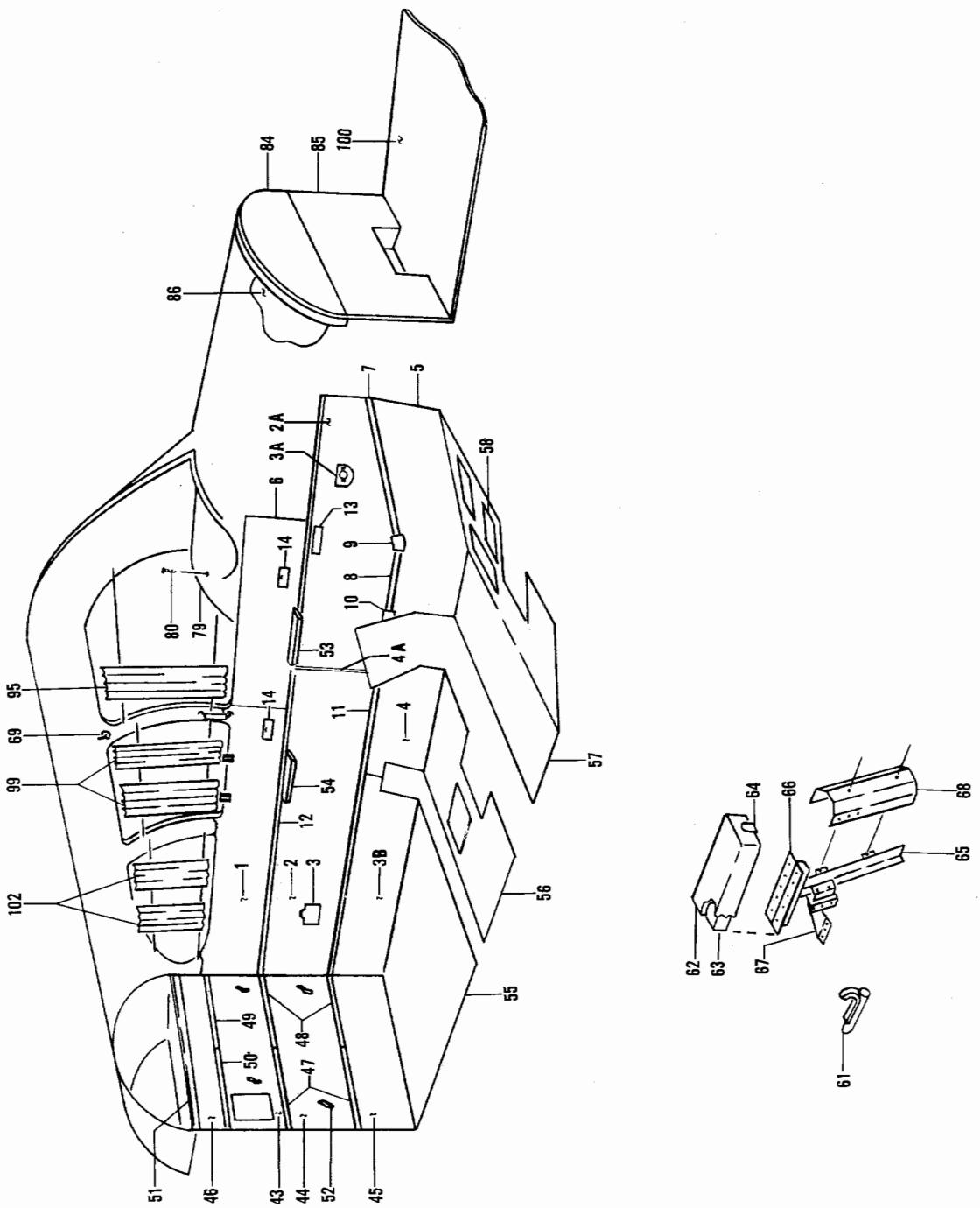

Figure 14C. Cabin Upholstery & Soundproofing (TD-534 thru TD-707) (Sheet 1 of 2 sheets)

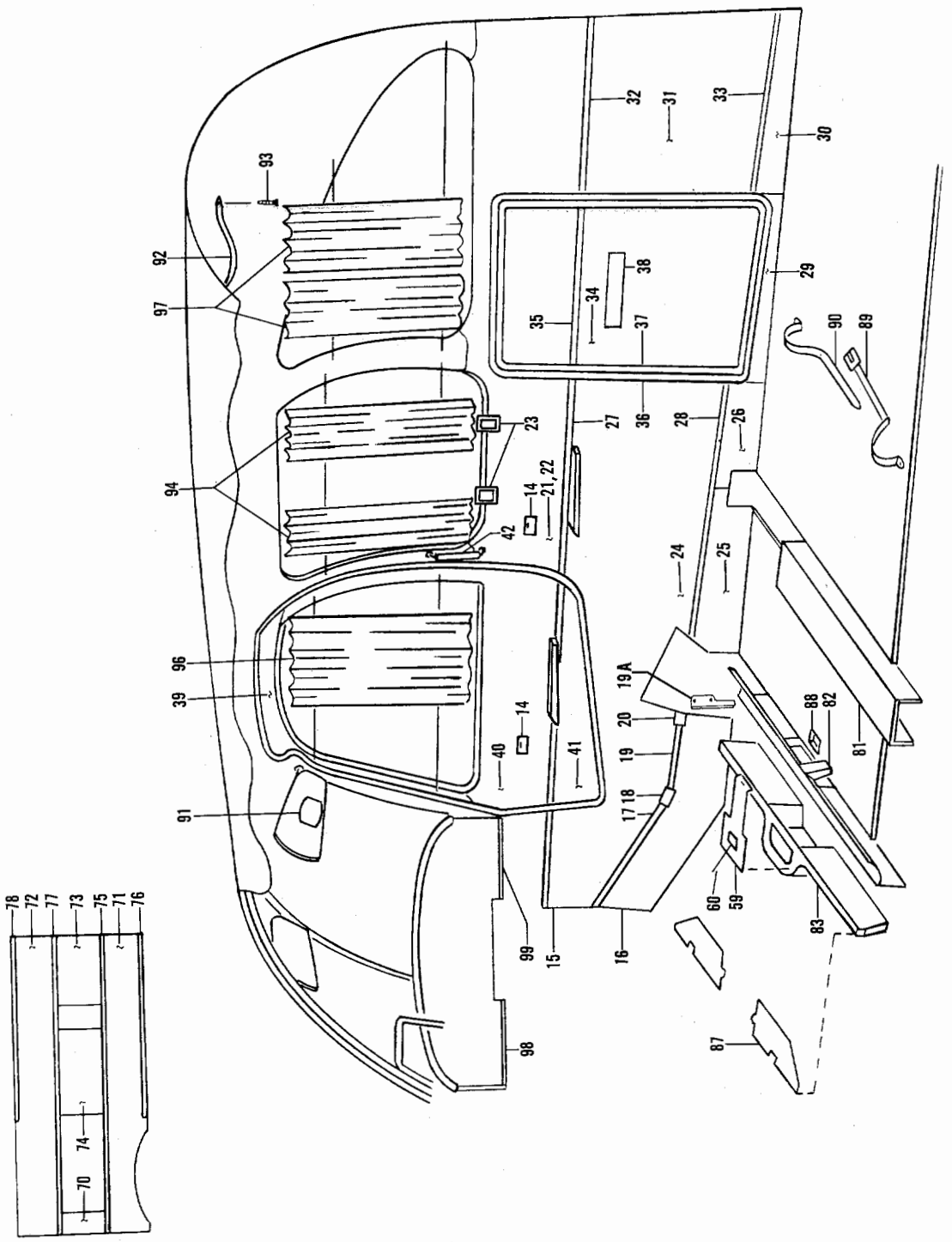

Figure 14C. Cabin Upholstery & Soundproofing (TD-534 thru TD-707) (Sheet 2 of 2 sheets)

FIG. & INDEX NO.	PART NO.	DESCRIPTION 1 2 3 4 5 6 7	UNITS PER ASSY	USABLE ON CODE
14C-	95-530004-1	UPHOLSTERY & STANDARD SOUNDPROOFING INSTL. . . . /STANDARD BAGGAGE DOOR/	NP	1
	95-530004-45	UPHOLSTERY & STANDARD SOUNDPROOFING INSTL . . . /UTILITY BAGGAGE DOOR/ /SEE FIG. 9A/	NP	1
	95-530004-3	UPHOLSTERY & SUPER SOUNDPROOFING INSTL. . . . . /STANDARD BAGGAGE DOOR/	NP	1
	95-530004-47	UPHOLSTERY & SUPER SOUNDPROOFING INSTL. . . . . /UTILITY BAGGAGE DOOR/ /SEE FIG. 9A/	NP	1
- 1	95-530004-17	. PANEL ASSY,LH UPPER AFT . . . . . /USED WITHOUT OPENABLE WINDOWS/	1	1
	95-530004-25	. PANEL ASSY,LH UPPER AFT . . . . . /USED WITH OPENABLE WINDOWS/	1	1
	¤35-534412	. ESCUTCHEON,WINDOW LATCH	2	1
- 2	95-530002-43	. PANEL ASSY,MID PANEL AFT LH	1	1
	35-534420-57	. PANEL ASSY,MID PANEL AFT LH	1	1
- 2A	96-530002-99	. PANEL ASSY,MID PANEL FWD LH	1	1
- 3	95-530002-113	. PANEL ASSY,STATIC AIR LINE DRAIN DOOR . . . . /ATTACHING PARTS/	1	4
	¤NAS384-6-6P	. . SCREW	1	
	¤NAS391-6	. . WASHER.	1	
	¤A1785-6Z-1	. . NUT	1	
		----*----		
- 3A	96-324068	. PANEL,EMERGENCY AIR SOURCE.	1	5
- 3B	96-530001-31	. PANEL ASSY,LOWER AFT LH.	1	
- 4	96-530001-161	. PANEL ASSY,LOWER MIDDLE LH.	1	1
- 4A	35-534420-49	. TRIM,MID PANEL ASSY DIVIDER	1	1
- 5	96-530001-9	. PANEL ASSY,LOWER FWD LH	1	1
- 6	96-530002-127	. PANEL ASSY,UPPER FWD LH	1	1
- 7	96-530001-11	. STRIP,TRIM LH LOWER FWD	1	1
- 8	96-530001-13	. STRIP,TRIM LH LOWER	1	1
- 9	96-530001-221	. STRIP,TRIM LH LOWER FWD	1	1
- 10	96-530001-219	. CLIP,TRIM LH LOWER.	1	1
- 11	96-530001-27	. STRIP,TRIM LH LOWER AFT	1	1
- 12	96-530001-25	. STRIP,TRIM LH UPPER	1	1
	96-530002-125	. STRIP,TRIM UPPER AFT LH	1	1
	96-530002-123	. STRIP,TRIM UPPER FWD LH	1	1
- 13	95-534040	. PLATE,INSTRUCTIONS.	1	1
- 14	2A20580	. ASH TRAY /SUPERSEDES 2A18260/	4	1
- 15	96-530002-103	. PANEL ASSY,FWD UPPER RH	1	1
- 16	96-530001-89	. PANEL ASSY,FWD LOWER RH	1	1
- 17	96-530001-85	. STRIP,TRIM LOWER FWD RH	1	1
- 18	96-530001-221	. STRIP,TRIM LOWER FWD RH	1	1
- 19	96-530001-79	. STRIP,TRIM LOWER FWD RH	1	1
- 19A	35-534300-112	. BRACKET,SUPPORT	1	1
- 20	96-530001-220	. CLIP,TRIM STRIP LOWER FWD RH.	1	1
- 21	96-530004-11	. PANEL ASSY,MID PANEL UPPER RH . . . . . /USE WITHOUT OPENABLE WINDOWS/	1	1
- 22	96-530004-31	. PANEL ASSY,MID PANEL UPPER RH . . . . . /USE WITH OPENABLE WINDOWS/	1	1
- 23	35-534412	. ESCUTCHEON,WINDOW LATCH	4	1
- 24	35-534420-29	. PANEL ASSY,MID PANEL RH	1	1
- 25	96-530001-73	. PANEL ASSY,MID PANEL LOWER FWD RH	1	1
- 26	96-530001-177	. PANEL ASSY,MID PANEL LOWER AFT RH	1	1
- 27	96-530001-67	. STRIP,TRIM UPPER MID PANEL RH	1	1
- 28	96-530001-69	. STRIP,TRIM LOWER MID PANEL RH . . . . . /WITH BAGGAGE DOOR/	1	1
- 29	96-530001-209	. PANEL,RH REAR SCUFF /WITH BAGGAGE DOOR/ . . .	1	1
- 30	96-530001-35	. PANEL ASSY,LOWER AFT BAGGAGE RH	1	1
- 31	35-534420-43	. PANEL ASSY,AFT MID PANEL RH	1	1
	96-530004-21	. PANEL ASSY,AFT UPPER RH /WITH BAGGAGE DOOR/ .	1	1
- 32	96-530001-41	. STRIP,TRIM UPPER AFT RH /WITH BAGGAGE DOOR/ .	1	1
- 33	96-530001-43	. STRIP,TRIM LOWER AFT RH /WITH BAGGAGE DOOR/ .	1	1
- 34	35-534420-35	. PANEL ASSY,BAGGAGE DOOR LOWER	1	1
- 35	96-530001-57	. STRIP,TRIM BAGGAGE DOOR UPHOLSTERY.	1	1
- 36	96-530001-147	. WINDLACE ASSY,BAGGAGE DOOR OPENING.	1	1

FIG. & INDEX NO.	PART NO.	DESCRIPTION 1 2 3 4 5 6 7	UNITS PER ASSY	USABLE ON CODE
14C- 37	35-534406-87	. SEAL,BAGGAGE DOOR	1	1
- 38	¤96-534046	. PLACARD,WEIGHT LIMITATION	1	1
- 39	35-534304-93	. PANEL ASSY,CABIN DOOR LATCH COVER	1	1
- 40	96-530002-19	. PANEL,CABIN DOOR UPPER.	1	1
- 41	35-534420-113	. PANEL ASSY,CABIN DOOR LOWER	1	1
- 42	34CB759	. HANDLE,REAR SEAT ASSIST	2	1
- 43	96-530002-29	. PANEL ASSY,BULKHEAD 170 UPPER MID	1	1
- 44	35-534420-67	. PANEL ASSY,BULKHEAD 170 MID	1	1
- 45	96-530001-117	. PANEL ASSY,BULKHEAD 170 LOWER	1	1
- 46	96-530002-61	. PANEL ASSY,UPPER BULKHEAD 170	1	1
- 47	96-530001-127	. STRIP,TRIM LH	2	1
- 48	96-530001-129	. STRIP,TRIM RH	2	1
- 49	96-530002-65	. STRIP,TRIM LH	1	1
- 50	96-530002-63	. STRIP,TRIM RH	1	1
- 51	96-530001-135	. STRIP,TRIM TOP.	1	1
- 52	96-530001-331	. PULL,PANEL REMOVING	4	1
- 53	96-534024-1	. ARMREST,FWD LH.	1	1
	96-534024-3	. ARMREST,FWD RH.	1	1
- 54	96-534024-33	. ARMREST,AFT LH.	1	1
	96-534024-34	. ARMREST,AFT RH.	1	1
- 55	95-530002-53	. CARPET ASSY,AFT	1	1
- 56	35-534305-39	. CARPET ASSY,MIDDLE.	1	1
- 57	96-530002-37	. CARPET ASSY,FWD SINGLE PEDAL INSTL.	1	1
	96-530002-55	. CARPET ASSY,FWD DUAL PEDAL INSTL.	1	1
		/ATTACHING PARTS/		
	¤AN227-6B	. FASTENER,BUTTON SNAP.	34	
	¤AN227-7B	. FASTENER,SOCKET	34	
		----*----		
- 58	35-534305-55	. BOOT ASSY,RUDDER PEDAL.	8	1
	35-534305-65	. BOOT ASSY,/ALTERNATE FOR 35-534305-55/. . . .	8	1
- 59	95-530004-5	. CARPET ASSY,CENTER.	1	1
- 60	¤33-324032	. PLACARD,LANDING GEAR INSTRUCTIONS	1	1
		/ATTACHING PARTS/		
	¤NAS384-6-6P	. SCREW	2	
		----*----		
- 61	¤35-534052	. BOOT ASSY,LANDING GEAR HANDLE COVER	1	1
- 62	35-534372-89	. ARMREST ASSY.	1	1
- 63	35-534372-83	. . ARMREST	1	1
- 64	35-534372-71	. . HOOK,MIKE	1	1
- 65	¤35-534372-65	. . SUPPORT	1	1
- 66	35-534372-67	. . BRACKET	1	1
	35-534372-33	. . CLIP.	2	1
- 67	¤35-534372-91	. BRACKET ASSY,ARMREST.	1	1
- 68	¤35-534372-85	. COVER ASSY,ARMREST.	1	1
- 69	4601746	. HOOK,PILOTS COAT HANGER	1	1
- 70	35-534394-650	. PANEL,HEADLINER CENTER FWD.	1	1
- 71	35-534394-652	. PANEL,HEADLINER RH.	1	1
- 72	35-534394-654	. PANEL,HEADLINER LH.	1	1
- 73	35-534394-656	. PANEL,HEADLINER CENTER AFT.	1	1
- 74	35-534394-658	. PANEL,HEADLINER CENTER MID PANEL.	1	1
- 75	¤35-534394-27	. TRIM STRIP,HEADLINER RH INBD.	1	1
- 76	¤35-534394-31	. TRIM STRIP,HEADLINER RH OUTBD	1	1
- 77	¤35-534394-33	. TRIM STRIP,HEADLINER LH INBD.	1	1
- 78	¤35-534394-39	. TRIM STRIP,HEADLINER LH OUTBD	1	1
- 79	96-530013-1	. GLARE SHIELD,DECK	1	2
	96-530013-53	. GLARE SHIELD,DECK	1	3
		/ATTACHING PARTS/		
- 80	96-530013-33	. SCREW,BLACK NICKEL PLATED	3	
	¤96-530013-35	. WASHER,BLACK NICKEL PLATED.	3	
		----*----		
- 81	95-530002-73	. COVER ASSY,REAR SPAR CARRY THRU STRUCTURE . .	1	1
- 82	¤35-534309-17	. PARTITION ASSY,FRONT SEAT AFT COVER	1	1
- 83	96-920013	. COVER ASSY,FUEL SELECTOR VALVE.	1	1
- 84	95-530000-21	. PANEL ASSY,FIREWALL UPPER	1	1

FIG. & INDEX NO.	PART NO.	DESCRIPTION 1 2 3 4 5 6 7	UNITS PER ASSY	USABLE ON CODE
14C- 85	95-530000-23	. BLANKET ASSY,FIREWALL LOWER	1	1
- 86	95-530000-33	. WRAPPER,COWL.	1	1
- 87	33-534015-7	. COVER ASSY,FRONT SEAT STRUCTURE LH.	1	1
	33-534015-8	. COVER ASSY,FRONT SEAT STRUCTURE RH.	1	1
	33-530000-57	. PAN ASSY,FLOOR.	1	1
- 88	35-415380-22	. . PAN,CLEARANCE FOR LG HANDCRANK.	1	1
- 89	¤95-530002-93	. STRAP ASSY,TIE DOWN LH.	1	1
- 90	95-530002-95	. STRAP ASSY,TIE DOWN RH.	1	1
- 91	231 MIRROR	VANITY VISOR MIRROR	1	1
	35-534399	HANGER INSTL,COAT	NP	1
- 92	¤35-534399-1	. TUBE,COAT HANGER.	1	1
		/ATTACHING PARTS/		
- 93	NAS387-8R8	. SCREW	2	
	¤NAS391-B8P	. WASHER /SUPERSEDES NAS391-8P/	2	
	¤AN366F832	. NUTPLATE.	2	
		----*----		
	35-534220	CURTAIN INSTL,REAR WINDOW	NP	1
- 94	35-534220-27	. CURTAIN ASSY,LH & RH /SPECIFY COLOR/.	2	1
	35-534221	CURTAIN INSTL,FRONT WINDOW LH	NP	1
- 95	35-534221-15	. CURTAIN ASSY,/SPECIFY COLOR/.	1	1
	35-534222	CURTAIN INSTL,CABIN DOOR.	NP	1
- 96	35-534222-19	. CURTAIN ASSY,/SPECIFY COLOR/.	1	1
	35-001052	CURTAIN INSTL,LARGE REAR WINDOW	NP	1
- 97	35-534409-1	. CURTAIN ASSY,/SPECIFY COLOR/.	4	1
- 98	96-530002-75	PANEL ASSY,INSTRUMENT PANEL TRIM LH	1	1
- 99	96-530002-79	PANEL ASSY,INSTRUMENT PANEL TRIM RH	1	1
		/ATTACHING PARTS/		
	¤NAS384-6-10P	SCREW	3	
	NAS391B6P	WASHER.	3	
	1195	FASTENER.	4	
		----*----		
-100	95-530004-37	CARPET ASSY,FWD BAGGAGE COMPARTMENT	1	1

CODE	EFFECTIVITY	CODE	EFFECTIVITY
1	TD-534 THRU TD-707	2	TD-534 THRU TD-650
3	TD-651 THRU TD-707	4	TD-534 THRU TD-637
5	TD-637 THRU TD-707		

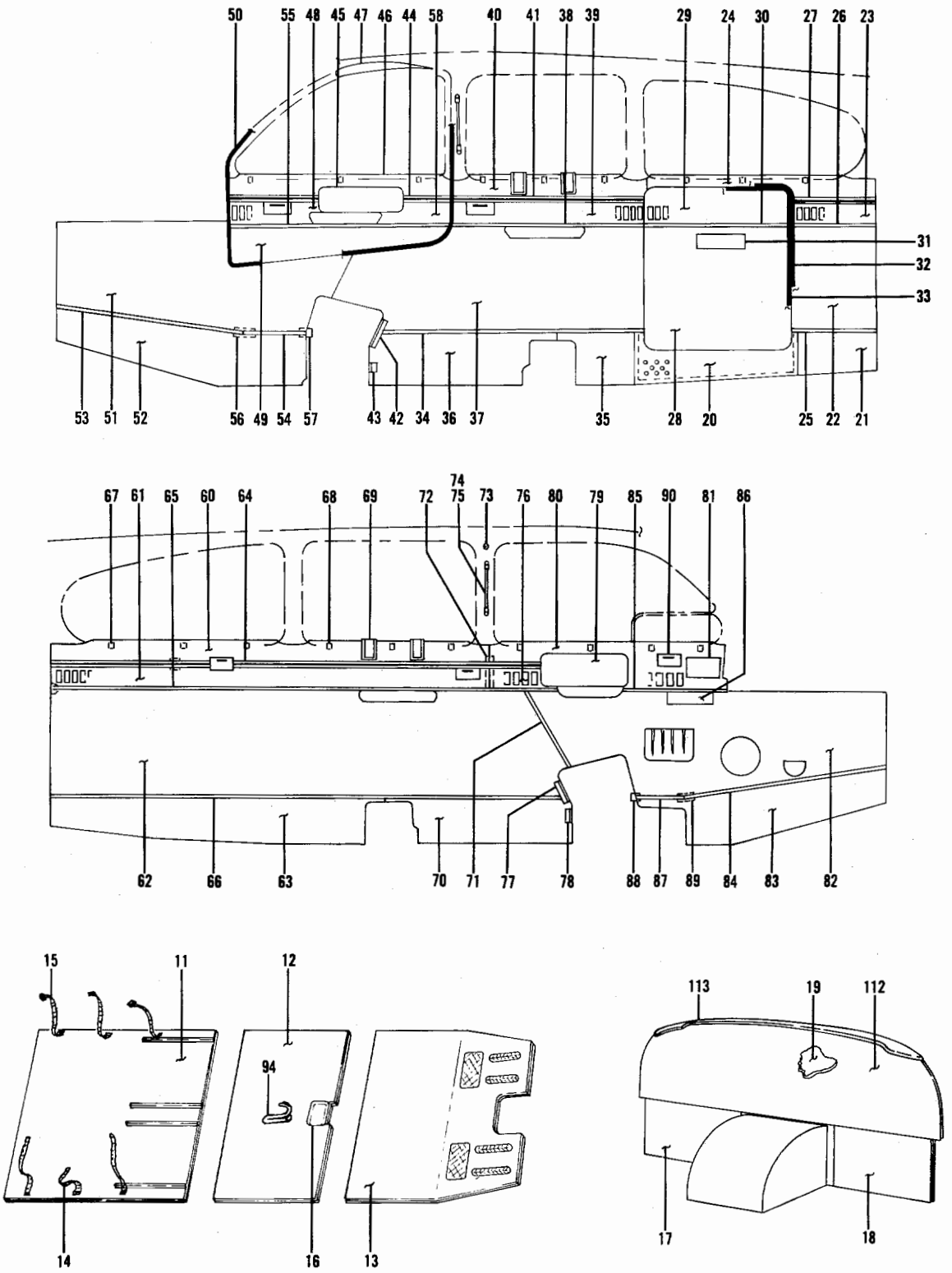

Figure 14D. Cabin Upholstery & Soundproofing
(TD-708 and After) (Sheet 1 of 2 Sheets)

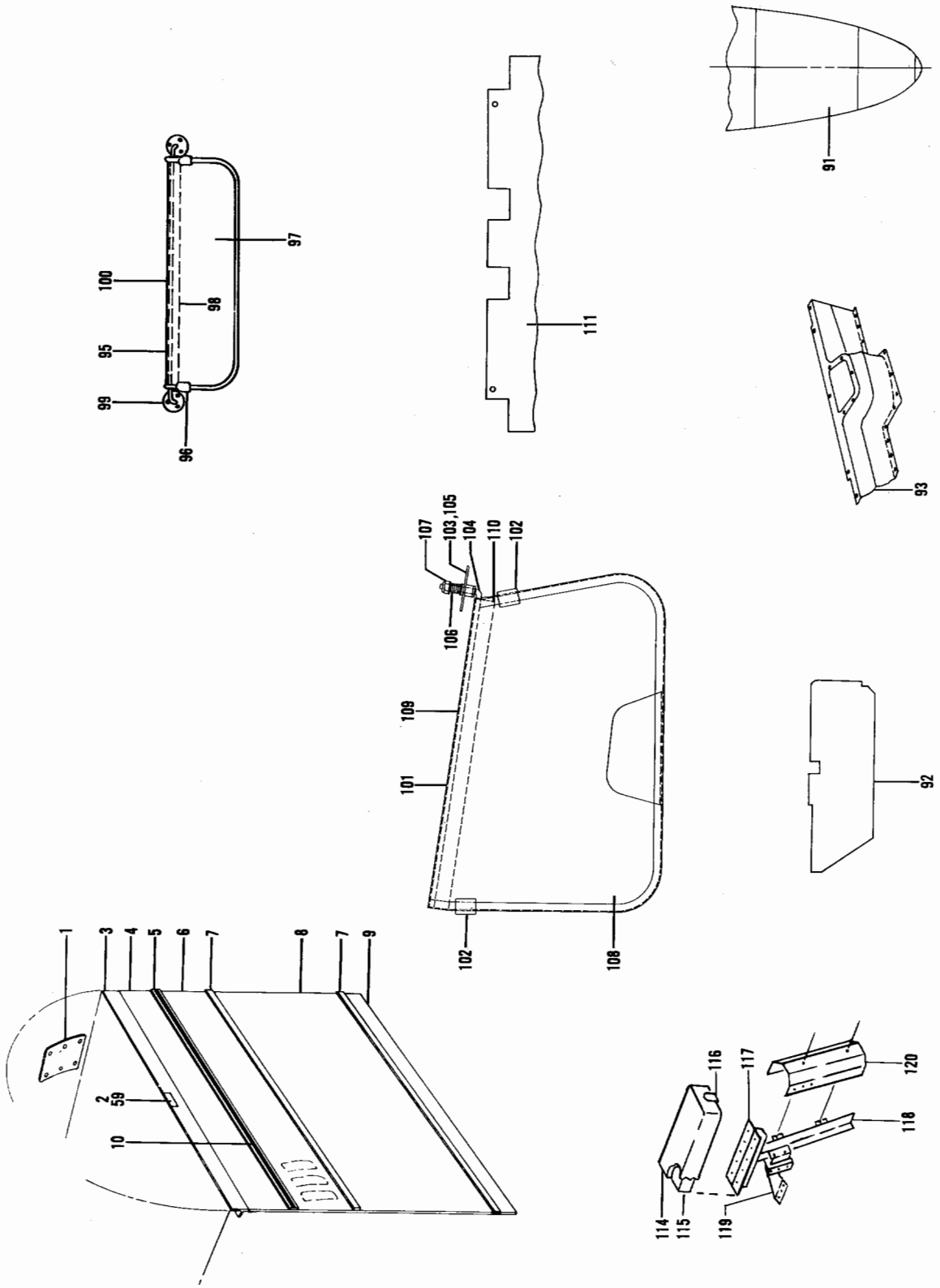

Figure 14D. Cabin Upholstery & Soundproofing (TD-708 and After) (Sheet 2 of 2 Sheets)

FIG. & INDEX NO.	PART NO.	DESCRIPTION 1 2 3 4 5 6 7	UNITS PER ASSY	USABLE ON CODE
14D	95-530005-1	UPHOLSTERY & STANDARD SOUNDPROOFING INSTL . . . /STANDARD BAGGAGE DOOR/	NP	1
	95-530005-5	UPHOLSTERY & STANDARD SOUNDPROOFING INSTL . . . /UTILITY BAGGAGE DOOR/ /SEE FIG. 9A/	NP	1
	95-530005-3	UPHOLSTERY & SUPER SOUNDPROOFING INSTL. . . . . /STANDARD BAGGAGE DOOR/	NP	1
	95-530005-7	UPHOLSTERY & SUPER SOUNDPROOFING INSTL. . . . . /UTILITY BAGGAGE DOOR/ /SEE FIG. 9A/	NP	1
- 1	118650-1	. HOLDER ASSY . . . . . /ATTACHING PARTS/	1	1
	AN227-8B	. STUD.	6	
	PK79XZ4-6	. SCREW	6	
		----*----		
- 2	35-534402	. DECAL,HAT SHELF /NO HEAVY OBJECTS/.	1	1
- 3	96-534011-7	. ANGLE,HAT SHELF FRONT	1	1
- 4	35-534437-183	. PANEL ASSY,BULKHEAD 170 UPPER	1	1
- 5	35-534437-175	. TRIM,BULKHEAD 170 UPPER	1	1
- 6	35-534437-177	. PANEL ASSY,BULKHEAD 170 MID UPPER	1	1
- 7	96-530002-135	. TRIM,BULKHEAD 170 MID & LOWER	2	1
- 8	35-534437-187	. PANEL ASSY,BULKHEAD 170 MID LOWER	1	1
- 9	96-530001-117	. PANEL ASSY,BULKHEAD 170 LOWER	1	1
- 10	.44W	. TAPE,WOOD GRAIN VINYL	AR	1
- 11	95-530002-53	. CARPET ASSY,AFT /BAGGAGE AREA/.	1	1
- 12	35-534305-39	. CARPET ASSY,MID CABIN	1	1
- 13	96-530002-55	. CARPET ASSY,FWD CABIN	1	1
- 14	96-530002-93	. STRAP ASSY,BAGGAGE RH	3	1
- 15	96-530002-95	. STRAP ASSY,BAGGAGE LH	3	1
- 16	35-415380-22	. PAN,EMERGENCY LANDING GEAR HAND CRANK	1	1
- 17	96-530004-197	. CARPET ASSY,CABIN FWD BULKHEAD /LOWER LH/ . .	1	1
- 18	96-530004-195	. CARPET ASSY,CABIN FWD BULKHEAD /LOWER RH/ . .	1	1
- 19	95-530004-49	. BLANKET,CABIN FWD BULKHEAD.	1	1
- 20	96-530001-209	. PANEL ASSY,BELOW BAGGAGE DOOR	1	1
- 21	96-530004-131	. PANEL ASSY,AFT RH SIDE.	1	1
- 22	96-530004-65	. PANEL ASSY,AFT RH SIDE MID LOWER.	1	1
- 23	95-530005-29	. PANEL ASSY,AFT RH SIDE MID UPPER.	1	1
- 24	95-530005-19	. PANEL ASSY,AFT RH SIDE UPPER.	1	1
- 25	96-530004-155	. TRIM,AFT RH SIDE LOWER.	1	1
- 26	96-530001-41	. TRIM,AFT RH SIDE MID.	1	1
- 27	95-530005-23	. TRIM,AFT RH SIDE UPPER.	1	1
- 28	96-530004-63	. PANEL ASSY,BAGGAGE DOOR LOWER	1	1
- 29	96-530006-71	. PANEL ASSY,BAGGAGE DOOR UPPER	1	1
- 30	96-530004-153	. TRIM,BAGGAGE DOOR	1	1
- 31	96-534046	. PLACARD,BAGGAGE DOOR.	1	1
- 32	35-534420-83	. WINDLACE,BAGGAGE DOOR /CABIN FRAME/	1	1
- 33	35-534420-85	. WINDLACE,BAGGAGE DOOR FRAME	1	
- 34	96-530004-149	. TRIM,RH SIDE CENTER LOWER	1	1
- 35	96-530004-127	. PANEL ASSY,RH SIDE CENTER LOWER AFT	1	1
- 36	96-530004-123	. PANEL ASSY,RH SIDE CENTER LOWER FWD	1	1
- 37	96-530004-61	. PANEL ASSY,RH SIDE CENTER LOWER MID	1	1
- 38	96-530004-151	. TRIM,RH SIDE CENTER MID	1	1
- 39	96-530006-65	. PANEL ASSY,RH SIDE CENTER UPPER MID	1	1
- 40	96-530006-59	. PANEL ASSY,RH SIDE CENTER UPPER	1	1
- 41	96-530006-63	. TRIM,RH SIDE CENTER UPPER	1	1
- 42	35-534201-3	. ANGLE,RH SIDE CENTER.	1	1
- 43	35-534202-3	. ANGLE,RH SIDE CENTER.	1	1
- 44	95-530005	. TRIM,RH SIDE CABIN DOOR UPPER	1	1
- 45	35-534417	. PANEL,CABIN DOOR RECESS	1	1
- 46	96-530006-55	. PANEL ASSY,CABIN DOOR UPPER	1	1
- 47	35-534304-93	. PANEL ASSY,RUB TOP OF CABIN DOOR.	1	1
- 48	96-530006-49	. PANEL ASSY,CABIN DOOR MID FWD	1	1
- 49	96-530004-59	. PANEL ASSY,CABIN DOOR LOWER	1	1
- 50	96-530004-199	. WINDLACE,CABIN DOOR	1	1
	50-534033-179	. STRIP,WINDLACE REINFORCEMENT.	1	1
- 51	95-530005-25	. PANEL ASSY,RH SIDE FWD UPPER.	1	1
- 52	96-530004-119	. PANEL ASSY,RH SIDE FWD LOWER.	1	1
- 53	96-530004-145	. TRIM,RH SIDE FWD LOWER.	1	1

FIG. & INDEX NO.	PART NO.	DESCRIPTION 1 2 3 4 5 6 7	UNITS PER ASSY	USABLE ON CODE
14D- 54	96-530004-147	. TRIM,RH SIDE FWD LOWER AFT.	1	1
- 55	96-530001-77	. TRIM,CABIN DOOR LOWER	1	1
- 56	96-530001-221	. STRAP,TRIM STRIP.	1	1
- 57	96-530001-220	. CLIP,TRIM STRIP	1	1
- 58	95-530005-53	. PANEL ASSY,CABIN DOOR MID AFT	1	1
	96-534011	. HAT SHELF INSTL	NP	1
	96-534011-5	. . HAT SHELF ASSY.	1	1
- 59	35-534402	. . . DECAL,HAT SHELF /NO HEAVY OBJECTS/. . . .	1	1
- 60	95-530005-17	. PANEL ASSY,LH SIDE UPPER AFT.	1	1
- 61	96-530006-29	. PANEL ASSY,LH SIDE AFT UPPER MID.	1	1
- 62	95-530005-9	. PANEL ASSY,LH SIDE AFT LOWER MID.	1	1
- 63	96-530004-115	. PANEL ASSY,LH SIDE LOWER AFT.	1	1
- 64	95-530005-13	. TRIM,LH SIDE UPPER AFT.	1	1
- 65	35-534437-197	. TRIM,LH SIDE AFT MID.	1	1
- 66	96-530004-141	. TRIM,LH SIDE AFT LOWER.	1	1
- 67	96-530002-67	. CLIP,UPHOLSTERY LH & RH	AR	1
- 68	96-530002-69	. CLIP,UPHOLSTERY LH & RH	AR	1
- 69	35-534412	. ESCUTCHEON,WINDOW LATCH	4	1
	96-534079-1	. ARM REST INSTL,SIDE	NP	1
9	6-534080-43	. . ARMREST ASSY,LH FWD	1	1
	96-534080-24	. . ARMREST ASSY,RH AFT	1	1
	96-534080-25	. . ARMREST ASSY,RH FWD	1	1
		/ATTACHING PARTS/		
	AN520-10-14	. . SCREW	2	
	AN960-10	. . WASHER.	2	
		----*----		
	35-534244	. . . CUP,RH FWD ARMREST DOOR PULL.	1	1
	96-534080-23	. . ARMREST ASSY,LH AFT		
	33-534024-19	. . BRACKET ASSY,LH & RH AFT ARMREST.	2	1
	96-534079-5	. . BRACKET ASSY,RH FWD ARMREST	1	1
	96-534079-23	. . BRACKET ASSY,LH FWD ARMREST	1	1
- 70	96-530004-111	. PANEL ASSY,LH SIDE CENTER LOWER	1	1
- 71	35-534420-49	. TRIM,LH SIDE VERTICAL CENTER.	1	1
- 72	33-530003-89	. BRACKET,UPHOLSTERY LH SIDE.	1	1
- 73	4840719	. HOOK,COAT LH SIDE	1	1
		/ATTACHING PARTS/		
	NAS384-8-10P	. SCREW	1	
		----*----		
- 74	34CB759	. HANDLE,LH & RH SIDE	2	1
		/ATTACHING PARTS/		
- 75	NAS387-1032-8P	. SCREW	2	
		----*----		
- 76	96-530006-131	. PANEL ASSY,LH SIDE CENTER UPPER	1	1
- 77	35-534202-2	. ANGLE,LH SIDE LOWER FWD	1	1
- 78	35-534201-2	. ANGLE,LH SIDE LOWER FWD	1	1
- 79	96-534052	. PANEL,RECESS LH SIDE.	1	1
- 80	96-530006-9	. PANEL ASSY,LH SIDE FWD UPPER.	1	1
- 81	96-530002-51	. PANEL,IGNITION BACKING LH SIDE.	1	1
- 82	96-530004-49	. PANEL ASSY,LH SIDE FWD MID.	1	1
- 83	96-530004-107	. PANEL ASSY,LH SIDE FWD LOWER.	1	1
- 84	96-530004-137	. TRIM,LH SIDE FWD LOWER FWD.	1	1
- 85	95-530005-67	. TRIM,LH SIDE FWD UPPER.	1	1
- 86	95-534040	. PLATE,INSTRUCTIONS /OPERATIONS-LIMITATIONS/ .	1	1

FIG. & INDEX NO.	PART NO.	DESCRIPTION 1 2 3 4 5 6 7	UNITS PER ASSY	USABLE ON CODE
14D- 87	96-530004-139	. TRIM,LH SIDE FWD LOWER AFT.	1	1
- 88	96-530001-219	. CLIP,TRIM LH SIDE FWD LOWER	1	1
- 89	96-530001-221	. STRAP,LH SIDE FWD LOWER	1	1
	96-534078-3	. ASH TRAY INSTL.	NP	1
- 90	33-534042-1	. . ASH TRAY ASSY	5	1
		/ATTACHING PARTS/		
	PK74XZ6-8	. . SCREW	2	
		----*----		
	96-534078-9	. . . BRACKET,ASH TRAY.	1	1
- 91	95-530004-39	. CARPET,NOSE BAGGAGE	1	1
	33-534015-9	. SPAR STRUCTURE COVER INSTL,FRONT SEAT	NP	1
- 92	33-534015-7	. . COVER ASSY,FRONT LH	1	1
	33-534015-8	. . COVER ASSY,FRONT RH	1	1
- 93	96-920013	. COVER,FUEL SELECTOR VALVE /FRONT SPAR/. . . .	1	1
- 94	35-534052	. COVER ASSY,LANDING GEAR EMERGENCY HAND CRANK.	1	1
	35-534098	. . PLACARD,LANDING GEAR EMERGENCY HAND CRANK .	1	1
- 95	35-534406-71	. VISOR ASSY,REAR	2	1
- 96	SS98577	. . CLIP,CHROME	2	
	35-534090	. . VISOR ASSY.	1	1
- 97	35-534090-2	. . . SHADE,VISOR	1	1
- 98	35-534090-4	. . . PIVOT,VISOR	1	1
- 99	35-534090-16	. . . WELD ASSY,VISOR	1	1
	35-534090-17	. . . WELD ASSY,VISOR	1	1
-100	35-534090-24	. . . CLUTCH,FRICTION	1	1
-101	35-534406-85	. VISOR ASSY,FRONT.	2	1
-102	SS98577	. . CLIP,CHROME	2	1
-103	33-530003-137	. . PIVOT ASSY,VISOR.	1	1
-104	33-530003-135	. . . WELD ASSY,VISOR	2	1
-105	33-530003-107	. . . PIVOT,VISOR	1	1
-106	95-534037	. . . SPRING,VISOR PIVOT.	1	1
-107	AN365-1032	. . . NUT,VISOR SPRING RETAINER	1	1
-108	35-534079-2	. . SHADE,VISOR	1	1
-109	35-534079-22	. . CLUTCH,VISOR FRICTION	1	1
-110	35-534079-4	. . PIVOT,SHADE	2	1
	96-530002-83	. PARTITION ASSY,FRONT SEAT REAR.	1	1
-111	35-534191-15	. . COVER ASSY,PARTITION.	1	1
-112	96-530002-79	. PANEL ASSY,UNDER INSTRUMENT PANEL LH.	1	1
	96-530002-75	. PANEL ASSY,UNDER INSTRUMENT PANEL RH.	1	1
		/ATTACHING PARTS/		
	1195	. FASTENER,PANEL LH	4	
	1195	. FASTENER,PANEL RH	3	
	NAS384-6-10P	. SCREW,PANEL RH.	1	
	NAS391B6P	. WASHER,PANEL RH	1	
		----*----		
-113	96-534075-31	GLARESHIELD,UPHOLSTERY /WITH ALTERNATOR/. . . .	1	1
	96-534075-41	GLARESHIELD,UPHOLSTERY /WITH GENERATOR/	1	1
	96-534075-71	GLARESHIELD,UPHOLSTERY /ALTERNATOR & RADAR/ . .	1	1
	96-534075-75	GLARESHIELD,UPHOLSTERY /GENERATOR & RADAR/. . .	1	1
	35-534372-77	ARMREST INSTL,FWD	NP	1
-114	35-534372-89	. ARMREST ASSY,FWD.	1	1
-115	35-534372-83	. . ARMREST	1	1
-116	35-534372-71	. . HOOK,MIKE	1	1
	35-534372-33	. . CLIP.	1	1
-117	35-534372-67	. . BRACKET	1	1
-118	35-534372-65	. . SUPPORT	1	1
-119	35-534372-91	. BRACKET ASSY,ARMREST.	1	1
-120	35-534372-85	. COVER ASSY,ARMREST.	1	1

CODE IEFFECTIVITY

1 TD-708 AND AFTER

BLANK PAGE

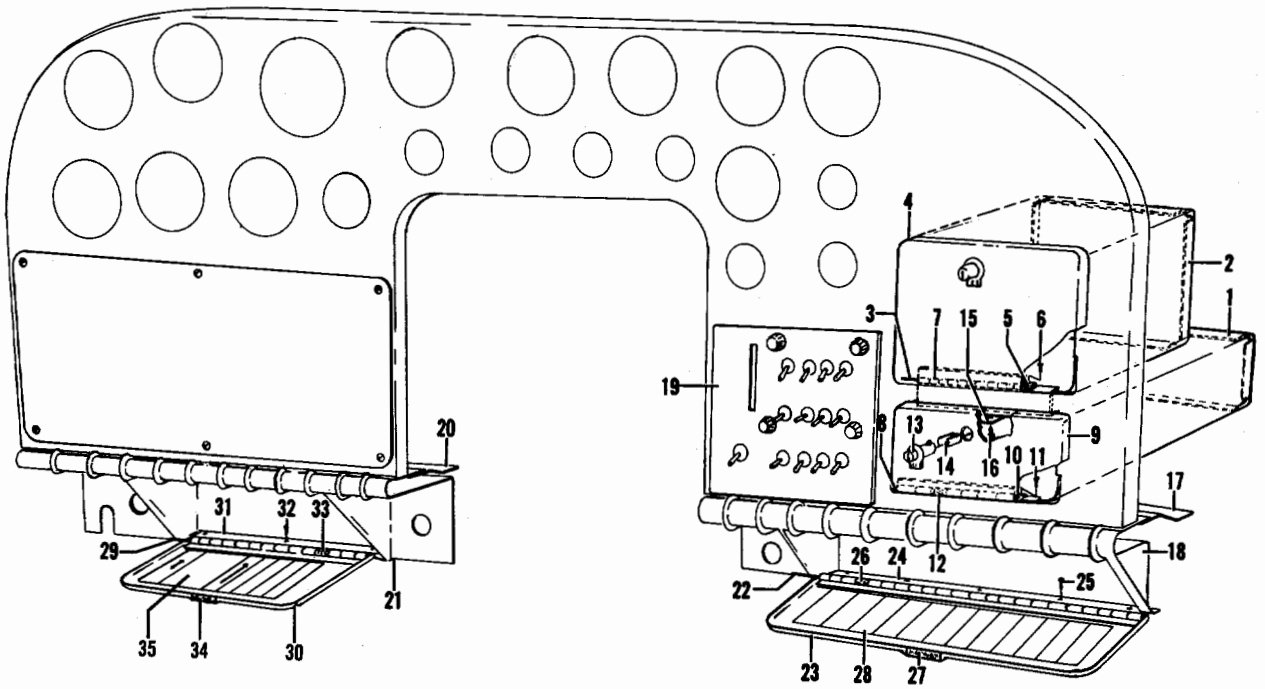

Figure 15. Instrument Panel Trim (TD-1 thru TD-533)

FIG. & INDEX NO.	PART NO.	DESCRIPTION 1 2 3 4 5 6 7	UNITS PER ASSY	USABLE ON CODE
		TRIM INSTL,INSTRUMENT PANEL		1
15 - 1	95-324038-23	. BOX ASSY,MAP.	1	1
	95-324038-29	. BOX ASSY,GLOVE.	1	1
- 2	95-324038-31	. . BODY,GLOVE BOX.	1	1
	95-324038-33	. DOOR ASSY,GLOVE BOX	1	2
	95-324038-63	. DOOR ASSY,GLOVE BOX	1	3
		/ATTACHING PARTS/		
- 3	AN253-2-513	. PIN,HINGE	1	
		----*----		
- 4	95-324038-35	. . DOOR,GLOVE BOX.	1	2
	95-324038-65	. . DOOR,GLOVE BOX.	1	3
- 5	95-324038-39	. . HINGE,HALF.	1	1
		/ATTACHING PARTS/		
- 6	AN530-6-4	. . SCREW	3	
		----*----		
- 7	115150	. . SPRING,TORSION.	2	2
	35-324204	. . KNOB,PULL	1	3
		/ATTACHING PARTS/		
	AN530-6R	. . SCREW	1	
		----*----		
	95-324038-41	. DOOR ASSY,MAP BOX	1	2
	95-324038-59	. DOOR ASSY,MAP BOX	1	3
		/ATTACHING PARTS/		
- 8	AN253-2-513	. PIN,HINGE	1	
		----*----		

FIG. & INDEX NO.	PART NO.	DESCRIPTION 1 2 3 4 5 6 7	UNITS PER ASSY	USABLE ON CODE
15 - 9	95-324038-43	. . DOOR,MAP BOX.	1	2
	95-324038-61	. . DOOR,MAP BOX.	1	3
- 10	95-324038-39	. . HINGE,HALF.	1	1
		/ATTACHING PARTS/		
- 11	AN530-6-4	. . SCREW	3	
		----*----		
- 12	115150	. . SPRING,TORSION.	2	2
	35-324204	. . KNOB,PULL	1	3
		/ATTACHING PARTS/		
	AN530-6R	. . SCREW	1	
		----*----		
- 13	3732065	. LOCK.	2	2
- 14	4131049	. RETAINER,LOCK	2	2
- 15	50-324076-13	. CATCH,LOCK.	2	2
		/ATTACHING PARTS/		
- 16	AN515-6R4	. SCREW	2	
	AN960-6	. WASHER.	2	
	AN364-632	. NUT	2	
		----*----		
	5	. STRIKE /HALF OF NUMBER 5 CATCH ASSY/.	2	3
	5	. CATCH /HALF OF NUMBER 5 CATCH ASSY/	2	3
		/ATTACHING PARTS/		
	AN515-6R	. SCREW	2	
	AN960-6	. WASHER.	2	
	MS20365-6	. NUT	2	
		----*----		
	95-324038-53	. PANEL ASSY,TRIM RH.	1	1
- 17	95-324038-49	. . SUPPORT,PANEL TRIM.	1	1
- 18	95-324038-1	. . PANEL,TRIM.	1	1
- 19	95-324045	. PANEL,EDGE LIGHTED SWITCH	1	4
	95-324045-1	. PANEL,EDGE LIGHTED SWITCH	1	5
	95-324038-21	. PANEL,COVER	1	4
		/ATTACHING PARTS/		
	AN530-6-6	. SCREW	6	
		----*----		
	95-324044	. PANEL,EDGE LIGHTED SWITCH	1	6
	95-324044-7	. PANEL,EDGE LIGHTED SWITCH	1	7
	95-324044-13	. PANEL,EDGE LIGHTED SWITCH	1	5
	95-324044-3	. . GUARD,STARTER & PRIMER SWITCH	1	8
		/ATTACHING PARTS/		
	AN515-6-6	. . SCREW	2	
	AN960-6L	. . WASHER.	2	
		----*----		
	95-324038-51	. PANEL ASSY,TRIM	1	9
	95-324038-69	. PANEL ASSY,TRIM	1	10
- 20	95-324038-49	. . SUPPORT,PANEL TRIM.	1	1
- 21	95-324038-3	. . PANEL,TRIM.	1	9
	95-324038-67	. . PANEL,TRIM.	1	10
	95-554035	. . PLACARD,CABIN HEAT & DEFROST INSTRUCTIONS .	1	10
	95-324038-5	. DOOR ASSY,EDGE LIGHTED PANEL RH	1	1
		/ATTACHING PARTS/		
- 22	AN253-1-1250	. PIN,HINGE	1	
		----*----		
- 23	95-324038-7	. . DOOR.	1	1
- 24	95-324038-9	. . HINGE,HALF.	1	1
		/ATTACHING PARTS/		
- 25	AN515-6	. . SCREW	4	
		----*----		
- 26	S-140	. . SPRING.	2	1
- 27	95-364021	. . PLACARD,CIRCUIT BREAKER DOOR KNOB	1	1
- 28	95-324053	. DECAL,CIRCUIT BREAKER PANEL	1	1
	95-324038-13	. DOOR ASSY,EDGE LIGHTED LH	1	1
		/ATTACHING PARTS/		
- 29	AN253-1-800	. PIN,HINGE	1	
		----*----		

FIG. & INDEX NO.	PART NO.	DESCRIPTION 1 2 3 4 5 6 7	UNITS PER ASSY	USABLE ON CODE
15 - 30	95-324038-15	. . DOOR.	1	1
- 31	95-324038-17	. . HINGE,HALF.	1	1
		/ATTACHING PARTS/		
- 32	AN515-6	. . SCREW	3	
		----*----		
- 33	S-140	. . SPRING.	2	1
- 34	95-364021	. . PLACARD,CIRCUIT BREAKER DOOR KNOB	1	1
- 35	95-344032	. . PLACARD,DOOR.	1	1
	95-324040	. . PLACARD,DOOR /ALTERNATE FOR 95-344032/. . .	1	1

CODE	EFFECTIVITY	CODE	EFFECTIVITY
1	TD-1 THRU TD-533	2	TD-1 THRU TD-179, TD-184 THRU TD-186
3	TD-180 THRU TD-183, TD-186 THRU TD-533	4	TD-1 THRU TD-173
5	TD-174 THRU TD-533	6	TD-1 THRU TD-27
7	TD-28 THRU TD-173	8	TD-28 THRU TD-302
9	TD-1 THRU TD-302	10	TD-303 THRU TD-533

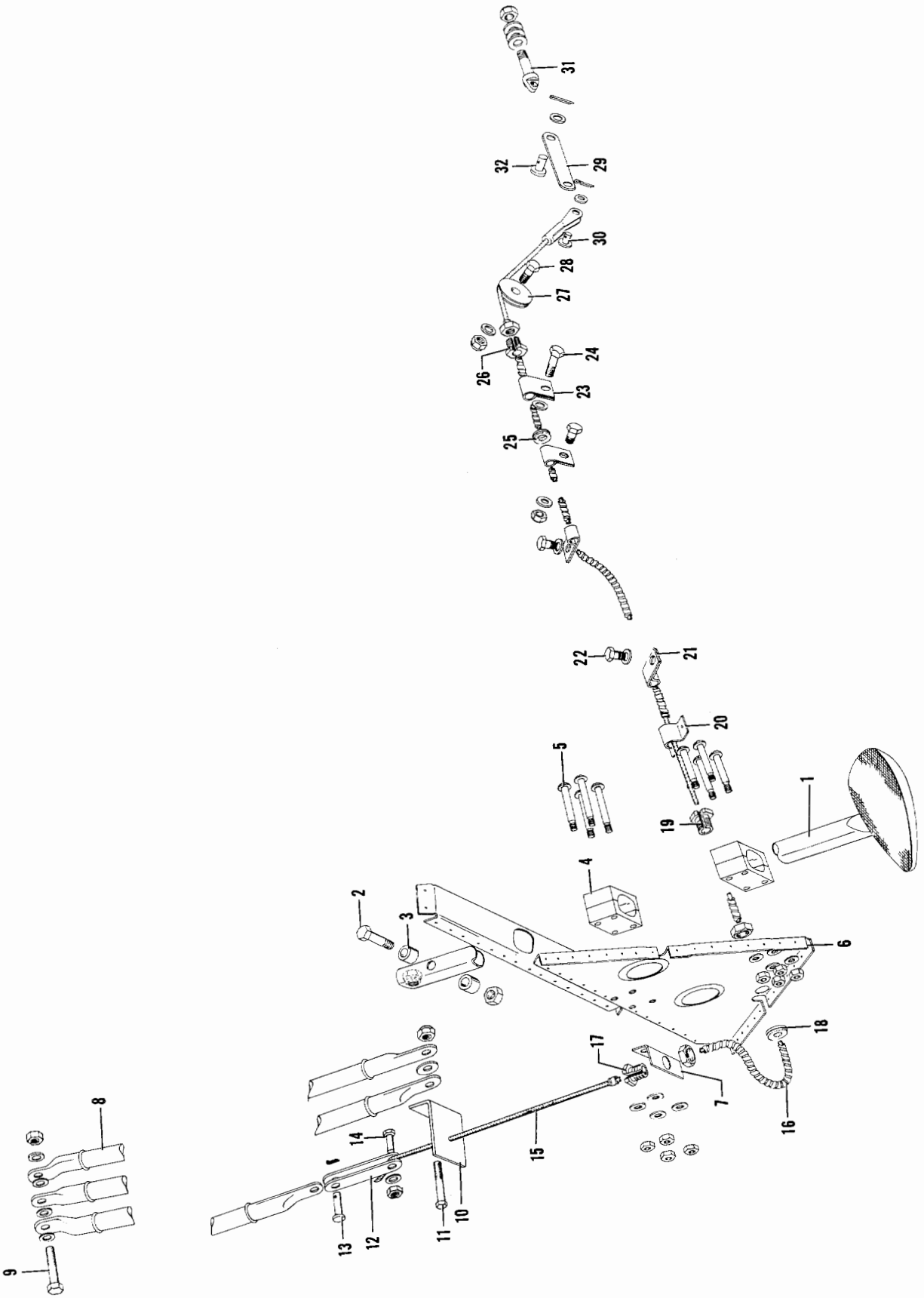

Figure 16. Retractable Assist Step (TD-1 thru TD-302)

FIG. & INDEX NO.	PART NO.	DESCRIPTION 1 2 3 4 5 6 7	UNITS PER ASSY	USABLE ON CODE
		STEP INSTL,RETRACT ASSIST /SEE FIG. 8 FOR NHA/.		1
		. STEP ASSY,ASSIST /BUY 35-410241-12/		1
16 - 1	35-410241-12	. . WELD ASSY,ASSIST STEP	1	1
		/ATTACHING PARTS/		
- 2	AN3-27A	. . BOLT.	1	
- 3	102933D4ZR0375	. . BUSHING	1	
	AN365-1032	. . NUT	1	
		----*----		
- 4	35-410242	. BLOCK ASSY,SUPPORT BEARING.	2	1
		/ATTACHING PARTS/		
- 5	AN23-26A	. BOLT.	5	
	AN23-27A	. BOLT.	3	
	AN960-10	. WASHER.	8	
	AN365-1032	. NUT	8	
		----*----		
- 6	35-410160-38	. SUPPORT,ASSIST STEP	1	1
- 7	35-410245	. ANGLE,ASSIST STEP CABLE ATTACHING	1	1
- 8	35-410243	. CORD ASSY,ASSIST STEP	3	1
		/ATTACHING PARTS/		
- 9	AN3-6A	. BOLT.	1	
	AN960-10	. WASHER.	1	
	AN960-10L	. WASHER.	1	
	AN365-1032	. NUT	1	
		----*----		
- 10	35-410271	. ANGLE,CABLE TO CORD ATTACHING	1	1
		/ATTACHING PARTS/		
- 11	AN3-6A	. BOLT.	1	
	AN960-10	. WASHER.	1	
	AN365-1032	. NUT	1	
		----*----		
- 12	35-410247	. STRAP,ASSIST STEP CORD ATTACHING.	2	1
		/ATTACHING PARTS/		
- 13	AN393-7	. PIN	2	
	AN380-2-2	. PIN,COTTER.	2	
		----*----		
	35-410244	. CABLE ASSY,ASSIST STEP ACTUATING.	1	1
		/ATTACHING PARTS/		
- 14	35-410248	. BOLT,ASSIST STEP CABLE.	1	
	AN916-416	. WASHER.	1	
	AN365-428	. NUT	1	
		----*----		
- 15	35-410244-2	. . CABLE,ASSIST STEP ACTUATING	1	1
- 16	S-167	. . HOUSING	1	1
- 17	S-129	. BUSHING	1	1
	AN365-624	. NUT	1	1
- 18	MS35489-6	. GROMMET,/SUPERCEDES AN931-4-7/.	1	1
	AN365-624	. NUT	1	1
- 19	S-123	. BUSHING	1	1
- 20	35-410246	. CLIP,STEP CABLE ALIGNMENT	1	1
- 21	A2981A-4-27	. CLAMP	2	1
		/ATTACHING PARTS/		
- 22	AN530-8-8	. SCREW	1	
	AN960-8	. WASHER.	1	
		----*----		
- 23	AN742-4	. CLAMP	2	1
		/ATTACHING PARTS/		
- 24	AN3-4A	. BOLT.	1	
	AN960-10	. WASHER.	1	
	AN365-1032	. NUT	1	
		----*----		
- 25	MS35489-6	. GROMMET,/SUPERCEDES AN931-4-7/.	1	1
- 26	S-123	. BUSHING	1	1
	AN365-624	. NUT	1	1

FIG. & INDEX NO.	PART NO.	DESCRIPTION 1 2 3 4 5 6 7	UNITS PER ASSY	USABLE ON CODE
16 - 27	118540BHP1	PULLEY	1	1
		/ATTACHING PARTS/		
- 28	AN3-6A	BOLT	1	
	AN960-10	WASHER	1	
	AN365-1032	NUT	1	
	AN392-13	PIN	1	
	AN380-2-2	PIN,COTTER	1	
		----*----		
- 29	35-410434	LINK,STEP RETRACT CABLE SAFETY	1	1
		/ATTACHING PARTS/		
- 30	AN393-7	PIN	1	
	AN960-10L	WASHER	4	
	AN380-2-2	PIN,COTTER	2	
		----*----		
- 31	AN42B-16A	BOLT,EYE	1	1
		/ATTACHING PARTS/		
- 32	AN393-7	PIN	1	
	AN960-10L	WASHER	1	
	AN380-2-2	PIN,COTTER	1	
		----*----		
	AN960-10	WASHER	1	1
	AN365-1032	NUT	1	1

CODE EFFECTIVITY

1 TD-1 THRU TD-302

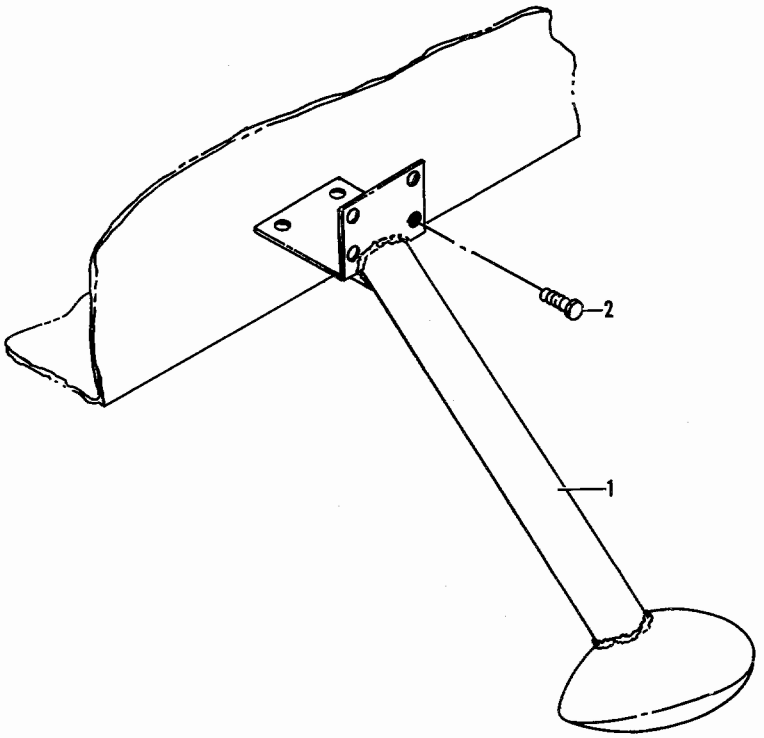

Figure 16A. Assist Step (TD-303 & after)

FIG. & INDEX NO.	PART NO.	DESCRIPTION 1 2 3 4 5 6 7	UNITS PER ASSY	USABLE ON CODE
16A-		STEP INSTL,ASSIST /SEE FIG. 8 FOR NHA/.		1
- 1	95-440014-1	. WELD ASSY,ASSIST STEP	1	2
	95-440014-21	. WELD ASSY,ASSIST STEP	1	3
		/ATTACHING PARTS/		
- 2	NAS221	. SCREW	9	
	AN365-1032	. NUT	9	
		----*----		

CODE	EFFECTIVITY	CODE	EFFECTIVITY
1	TD-303 AND AFTER	2	TD-303 THRU TD-527
3	TD-528 AND AFTER		

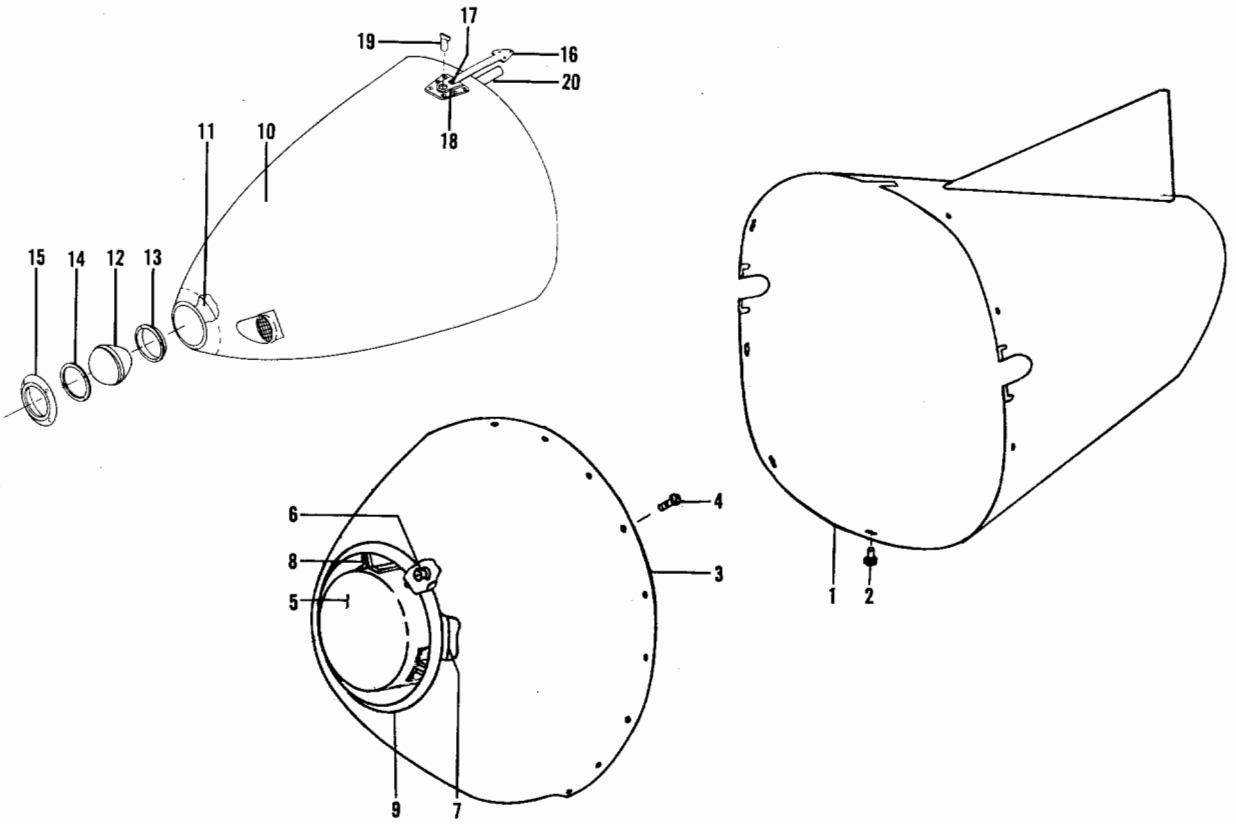

Figure 17. Nose Cone & Tail Cone

FIG. & INDEX NO.	PART NO.	DESCRIPTION 1 2 3 4 5 6 7	UNITS PER ASSY	USABLE ON CODE
17 - 1	¤45-440000-602	CONE ASSY,FUSELAGE TAIL	1	1
	45-440000-606	CONE ASSY,FUSELAGE TAIL	1	2
		/ATTACHING PARTS/		
- 2	¤AN530-8R6	SCREW	12	
		----*----		
	95-360000-604	. LAMP ASSY,TAIL.	1	1
	¤A2064-1683	. . LAMP ASSY,TAIL.	1	1
	¤1203	. . . LAMP.	1	1
	AN520-4R	. . . SCREW	2	1
	AN3111-2	. . . RING,BONDING.	1	1
	95-410011	FAIRING INSTL,FUSELAGE NOSE	NP	3
	¤95-410011-1	. CONE ASSY,NOSE.	1	3
- 3	¤95-410011-3	. . CONE, NOSE.	1	3
		/ATTACHING PARTS/		
- 4	AN525-8R	. . SCREW	17	
		----*----		
- 5	¤50-400165	. CAP,FUSELAGE NOSE CONE.	1	3
		/ATTACHING PARTS/		
- 6	AN526-832R9	. SCREW	3	
	¤AN960D8	. WASHER.	3	
		----*----		
- 7	¤50-400166	. . RING ASSY,LIGHT	1	5
	¤50-400166-6	. . RING ASSY,LIGHT	1	6
- 8	¤50-400205	. . SUPPORT,LIGHT	1	5
	¤50-400205-1	. . SUPPORT,LIGHT	1	6
- 9	¤95-410011-5	. . LIP,CONE.	1	3

FIG. & INDEX NO.	PART NO.	DESCRIPTION 1 2 3 4 5 6 7	UNITS PER ASSY	USABLE ON CODE
17	95-410040	FAIRING INSTL,FUSELAGE NOSE	NP	4
	95-410040-9	. CONE ASSY,NOSE.	1	4
- 10	95-410040-17	. . CONE,NOSE	1	4
- 11	¤95-410040-19	. . RING,NOSE LIGHT INNER RETAINER.	1	4
- 12	¤4596	. . BULB,NOSE CONE TAXI OR LANDING LIGHT. . . .	1	4
- 13	¤50-364253-7	. . GASKET,NOSE LIGHT	1	4
- 14	¤50-364253-9	. . GASKET,NOSE LIGHT	1	4
- 15	¤95-410040-21	. . RETAINER,NOSE LIGHT	1	4
		/ATTACHING PARTS/		
	AN507-8R8	. . SCREW	5	
		----*----		
- 16	¤414-184040-7	. . STRAP	3	4
- 17	¤414-184040-19	. . BOLT ASSY	3	4
- 18	¤414-184040-1	. . LEVER	3	4
- 19	¤98292-2-170	. . STUD.	3	4
	¤99836	. . PIN	3	4
- 20	¤507208	. . STOP.	3	4
	¤AN935-516	. . WASHER,LOCK	3	4

CODE	EFFECTIVITY	CODE	EFFECTIVITY
1	TD-1 THRU TD-452	2	TD-453 AND AFTER
3	TD-1 THRU TD-533	4	TD-534 THRU TD-614
5	TD-1 THRU TD-497	6	TD-498 THRU TD-533

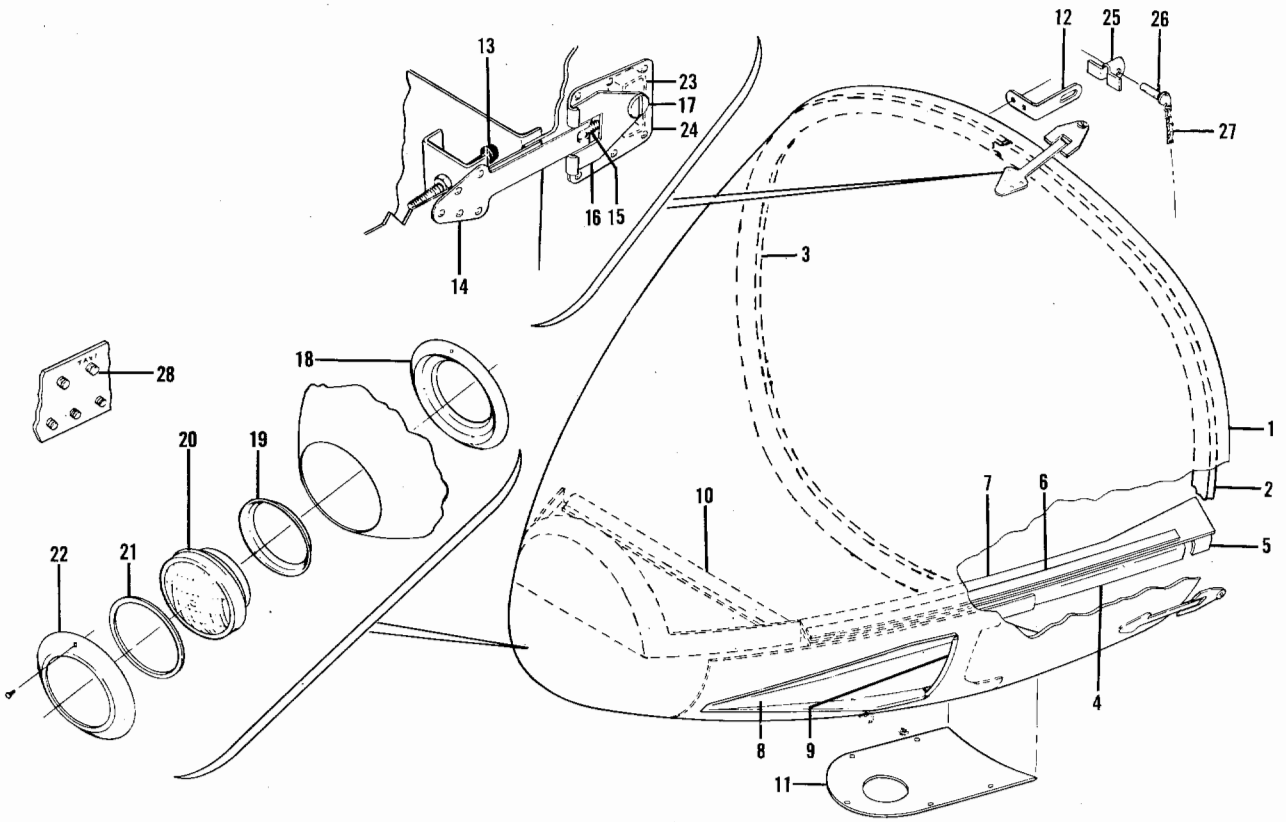

Figure 17A. Nose Cone (TD-615 & After)

FIG. & INDEX NO.	PART NO.	DESCRIPTION 1 2 3 4 5 6 7	UNITS PER ASSY	USABLE ON CODE
17A	¤96-410021-603	CONE ASSY,FUSELAGE NOSE /WITHOUT TAXI LIGHT/. .	1	1
	¤96-410021-605	CONE ASSY,FUSELAGE NOSE /WITH TAXI LIGHT/ . . .	1	1
- 1	96-410021-609	. CONE,NOSE /WITHOUT TAXI LIGHT/.	1	1
	¤96-410021-607	. CONE,NOSE /WITH TAXI LIGHT/	1	1
- 2	95-410040-13	. . BULKHEAD,LH	1	1
- 3	¤95-410040-23	. . BULKHEAD,RH	1	1
	¤95-410040-33	. SEAL ASSY,RADIO SHELF LH.	1	1
	¤95-410040-34	. SEAL ASSY,RADIO SHELF RH.	1	1
- 4	95-410040-36	. . ANGLE,LH.	1	1
	95-410040-35	. . ANGLE,RH.	1	1
- 5	95-410040-38	. . ANGLE,LH.	1	1
	95-410040-37	. . ANGLE,RH.	1	1
- 6	95-410040-41	. . STRIP	2	1
- 7	95-410040-39	. . SEAL,RUBBER	2	1
- 8	96-410021-15	. DUCT PAN,LH	1	1
	96-410021-16	. DUCT PAN,RH	1	1
- 9	50-554242-3	. DUCT.	2	1
- 10	¤115093	. SEAL,NOSE CONE BULKHEAD /15 1/2 IN. LONG/ . .	1	1
- 11	95-410040-30	. SHIELD,HEATER EXHAUST	1	1
		/ATTACHING PARTS/		
	¤98265-1-120	. STUD.	5	
	¤99836	. PIN	5	
	¤99833P098	. RECEPTACLE.	5	

FIG. & INDEX NO.	PART NO.	DESCRIPTION 1 2 3 4 5 6 7	UNITS PER ASSY	USABLE ON CODE
17A- 12	95-410040-27	. ANGLE	1	1
		/ATTACHING PARTS/		
	AN520R1032	. SCREW	2	
	¤AN960-10L	. WASHER.	2	
	¤MS20365-1032	. NUT	2	
		----*----		
- 13	¤507208	. STOP,NOSE CONE.	3	1
	¤AN935-516	. WASHER,LOCK	6	1
- 14	¤414-184040-7	. STRAP,NOSE CONE FASTENER.	3	1
- 15	¤414-184040-19	. BOLT ASSY,NOSE CONE FASTENER.	1	1
	¤414-184040-21	. . BOLT,T.	1	1
	¤414-184040-17	. . PIN	1	1
- 16	¤414-184040-1	. LEVER ASSY,NOSE CONE FASTENER	3	1
- 17	¤98292-2-170	. STUD.	3	1
	¤99836	. PIN	3	1
- 18	¤95-410040-19	. RING,NOSE CONE LIGHT RETAINER	1	1
- 19	¤50-364253-7	. GASKET,NOSE CONE LIGHT.	1	1
- 20	¤4626	. LAMP,NOSE CONE.	1	1
	96-360011-674	. WIRE ASSY,NOSE CONE LIGHT	1	1
- 21	¤50-364253-9	. GASKET,NOSE CONE LIGHT.	1	1
- 22	¤95-410040-21	. RETAINER,OUTER NOSE CONE LIGHT.	1	1
		/ATTACHING PARTS/		
	¤AN507-832R8	. SCREW	5	
	¤AN366F832	. NUTPLATE.	5	
		----*----		
- 23	¤414-184040-11	COVER,NOSE CONE FASTENER.	3	1
- 24	¤414-184040-9	PLATE,NOSE CONE FASTENER.	3	1
	¤99947P130	RECEPTACLE.	3	1
- 25	95-410040-29	BRACKET,NOSE CONE LOCK.	1	1
		/ATTACHING PARTS/		
	AN515-8R	SCREW	2	
	¤AN960-8	WASHER.	2	
		----*----		
- 26	¤NAS1334S6S10	PIN,NOSE CONE LOCK.	1	1
- 27	109615-4-081	CHAIN,NOSE CONE LOCK PIN.	1	1
		/ATTACHING PARTS/		
	AN515-6R	SCREW	1	
	¤AN960-6	WASHER.	1	
	AN366-632	NUTPLATE.	1	
		----*----		
- 28	¤CB3110C	SWITCH,TAXI LIGHT /SUPERSEDES 113-210-102/. . .	1	1

CODE EFFECTIVITY

1 TD-615 AND AFTER

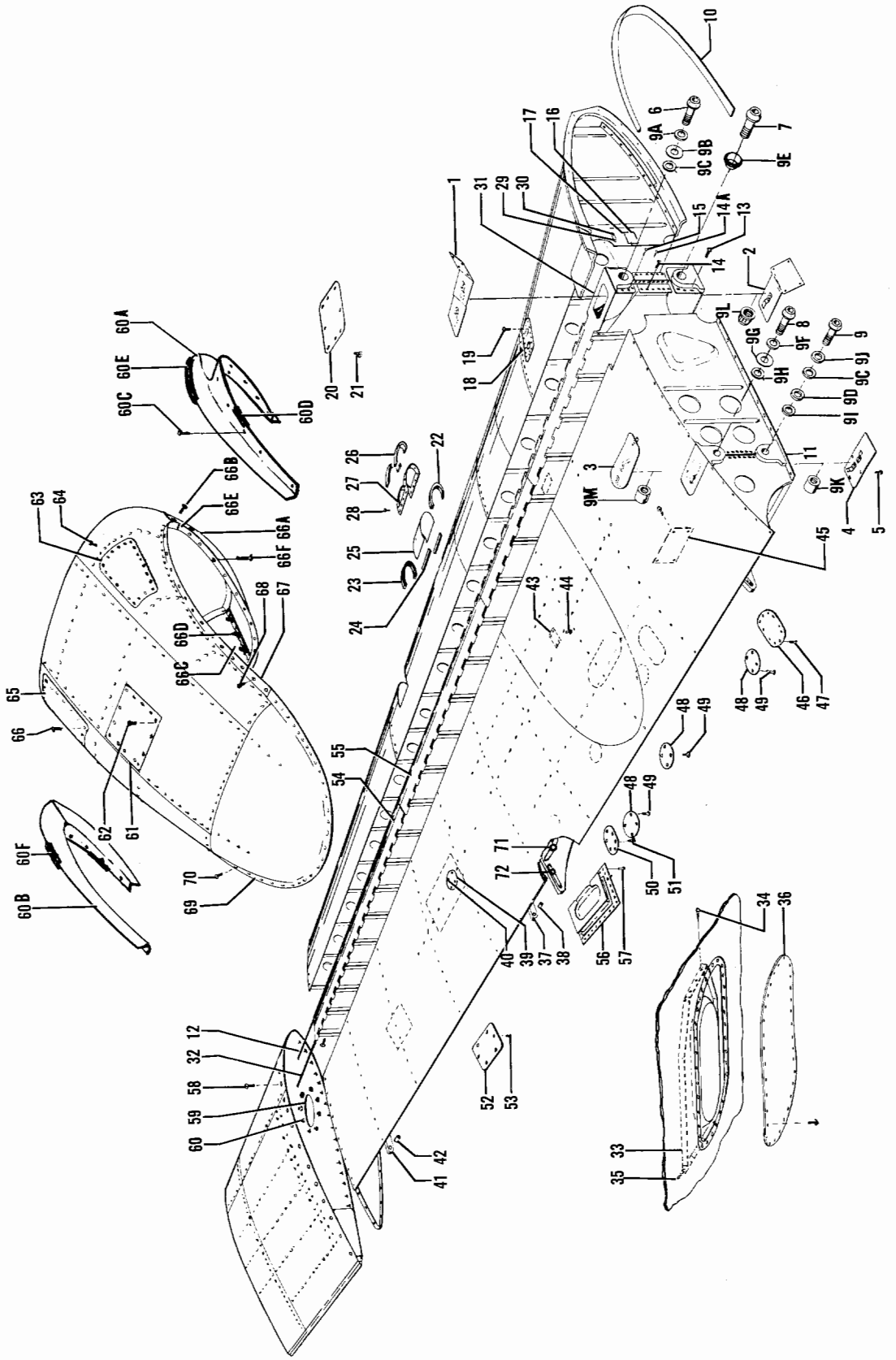

Figure 18. Wing

FIG. & INDEX NO.	PART NO.	DESCRIPTION 1 2 3 4 5 6 7	UNITS PER ASSY	USABLE ON CODE
		WING INSTL,LH		
		WING INSTL,RH		
18 - 1	35-105005-10	. DOOR ASSY,UPPER FRONT LH.	1	
	35-105005-11	. DOOR ASSY,UPPER FRONT RH.	1	
- 2	35-105005-8	. DOOR ASSY,LOWER FRONT LH.	1	
	35-105005-9	. DOOR ASSY,LOWER FRONT RH.	1	
- 3	35-105005-12	. DOOR ASSY,UPPER REAR LH	1	
	35-105005-15	. DOOR ASSY,UPPER REAR RH	1	
- 4	35-105110	. COVER ASSY,LOWER REAR LH.	1	
	35-105110-1	. COVER ASSY,LOWER REAR RH.	1	
		/ATTACHING PARTS/		
- 5	PK562-8-6	. SCREW	3	
		----*----		
	95-110005-605	WING ASSY,LH /LESS AILERON,FLAP,WING TIP &. . .	1	6
		LANDING GEAR/		
		/SPARE ASSY,SEE SECTION 4 FOR COMPONENTS/		
	95-110005-676	WING ASSY,LH /LESS AILERON,FLAP,WING TIP &. . .	1	5
		LANDING GEAR/		
		WING INSTL,LH		6
		WING INSTL,LH		5
	95-110005-606	WING ASSY,RH /LESS AILERON,FLAP,WING TIP &. . .	1	6
		LANDING GEAR/		
		/SPARE ASSY,SEE SECTION 4 FOR COMPONENTS/		
	95-110005-677	WING ASSY,RH /LESS AILERON,FLAP,WING TIP &. . .	1	5
		LANDING GEAR/		
		WING ASSY,RH.		5
		WING ASSY,RH.		6
		/ATTACHING PARTS/		
- 6	NAS152-37/M/	BOLT.	1	
- 7	NAS495-14-26/M/	BOLT.	1	
- 8	NAS150-35/M/	BOLT.	1	
- 9	NAS152-40/M/	BOLT.	1	
- 9A	95-110021	WASHER.	1	
- 9B	105090A032-12K	WASHER.	1	
- 9C	95-110025-1	WASHER.	2	
- 9D	NAS143-12	WASHER.	AR	
- 9E	50-105011	WASHER.	1	
- 9F	35-105111	WASHER.	1	
- 9G	105090A032-10J	WASHER.	1	
- 9H	95-110025-3	WASHER.	1	
- 9I	NAS143-10	WASHER.	AR	
- 9J	95-110021-1	WASHER.	1	
- 9K	12B-126	NUT /UPPER FWD & LOWER AFT/	2	
- 9L	EB144	NUT	1	
- 9M	12B108	NUT	1	
		----*----		
- 10	115092-10500	. EXTRUSION, WING FAIRING	1	
- 11	111722-03408	. EXTRUSION, WING FAIRING	1	
		. EDGE ASSY,LEADING LH /SEE FIG. 19/.		1
		. EDGE ASSY,LEADING LH /SEE FIG. 19/.		2
		. EDGE ASSY,LEADING LH /SEE FIG. 19A/		5
		. EDGE ASSY,LEADING RH /SEE FIG. 19/.		1
		. EDGE ASSY,LEADING RH /SEE FIG. 19/.		2
		. EDGE ASSY,LEADING RH /SEE FIG. 19A/		5
		/ATTACHING PARTS/		
- 12	105774C-ZG18700	. PIN,HINGE /TRIM ON INSTL/	2	
- 13	AN525-832R	. SCREW	10	
- 14	NAS220-9	. SCREW	20	
- 14A	NAS220	. SCREW	1	
- 15	AN525-1032R	. SCREW	12	
	AN960-8	. WASHER.	31	
	AN960-10	. WASHER.	12	
	AN365-832	. NUT	31	
	MS20365-1032	. NUT	12	
		----*----		

FIG. & INDEX NO.	PART NO.	DESCRIPTION 1 2 3 4 5 6 7	UNITS PER ASSY	USABLE ON CODE
18 - 16	35-115166-18	. . DOOR ASSY,LH.	1	
	35-115166-19	. . DOOR ASSY,RH.	1	
		/ATTACHING PARTS/		
- 17	104215-00300	. . PIN,HINGE	1	
		----*----		
- 18	50-110010-104	. . DOOR ASSY,FUEL CELL ACCESS.	1	6
	95-110014-69	. . DOOR ASSY,FUEL CELL ACCESS.	1	5
	50-110010-105	. . DOOR ASSY,FUEL CELL ACCESS.	1	6
	95-110014-70	. . DOOR ASSY,FUEL CELL ACCESS.	1	5
		/ATTACHING PARTS/		
- 19	AN507-1032	. . SCREW	20	
		----*----		
- 20	50-110010-106	. . COVER,FLUSH FILLER CAP.	1	
		/ATTACHING PARTS/		
- 21	AN507-632-8	. . SCREW	6	
		----*----		
		. . PANE ASSY,WING TAXI LIGHT LH.		6
		. . PANE ASSY,WING TAXI LIGHT RH.		6
- 22	45-115136-4	. . . SEAL.	1	6
- 23	45-115136-6	. . . SEAL.	1	6
- 24	45-115136-8	. . . SEAL.	1	6
- 25	45-115136-2	. . . PANE,WING TAXI LIGHT LH	1	6
	45-115136-3	. . . PANE,WING TAXI LIGHT RH	1	6
- 26	45-115019	. . DOUBLER,WING TAXI LIGHT LH.	1	6
	45-115019-1	. . DOUBLER,WING TAXI LIGHT RH.	1	6
- 27	95-110015-159	. . SUPPORT,WING TAXI LIGHT LH.	1	6
	95-110015-160	. . SUPPORT,WING TAXI LIGHT RH.	1	6
		/ATTACHING PARTS/		
- 28	AN507-832R7	. . SCREW	32	
		----*----		
- 29	103637	. PLACARD	1	
		/ATTACHING PARTS/		
- 30	49384	. FASTENER.	2	
		----*----		
- 31	95-110013-1	. SPAR ASSY,WING FRONT LH	1	
	95-110013-2	. SPAR ASSY,WING FRONT RH	1	
	95-110014-1	. SECTION ASSY,WING LH /SEE FIG. 19/.	1	
	95-110014-2	. SECTION ASSY,WING RH /SEE FIG. 19/.	1	
		/ATTACHING PARTS/		
- 32	105774C-ZG18700	. PIN,HINGE	2	
	AN525-832R	. SCREW	12	
	NAS220-9	. SCREW	10	
	AN515-8R	. SCREW	3	
	AN960-8	. WASHER.	22	
	AN365-832	. NUT	22	
		----*----		
- 33	95-110014-365	. . DOOR ASSY,MAIN SECTION LH	1	
	95-110014-366	. . DOOR ASSY,MAIN SECTION RH	1	
		/ATTACHING PARTS/		
- 34	AN3-8A	. . BOLT.	3	
- 35	102361-00228	. . PIN,HINGE	1	
		----*----		
- 36	50-110074-5	. . DOOR,FUEL CELL ACCESS LH.	1	
	50-110074-6	. . DOOR,FUEL CELL ACCESS RH.	1	
		/ATTACHING PARTS/		
	AN507-832	. . SCREW	16	
		----*----		
	35-115147	. . FITTING ASSY,INBD AILERON HINGE	1	
- 37	35-115147-2	. . . FITTING,INBD AILERON HINGE.	1	
- 38	NAS505-3J	. . . BEARING,INBD AILERON HINGE.	1	
- 39	50-110025-44	. . DOOR,MAIN SECTION	1	
		/ATTACHING PARTS/		
- 40	AN507-832RH	. . SCREW	6	
		----*----		

FIG. & INDEX NO.	PART NO.	DESCRIPTION 1 2 3 4 5 6 7	UNITS PER ASSY	USABLE ON CODE
18	35-115071-12	. . FITTING ASSY,OUTBD AILERON HINGE.	1	
- 41	35-115071-10	. . . PLATE,OUTBD AILERON HINGE FITTING	1	
- 42	NAS505-3J	. . . BEARING,OUTBD AILERON HINGE FITTING . . .	1	
- 43	50-110002-178	. . PLATE,WING INSPECTION	1	
		/ATTACHING PARTS/		
- 44	AN509-8R	. . SCREW	4	
		----*----		
- 45	35-115256	. . COVER ASSY,FLAP ACTUATOR RH	1	
- 46	95-110014-339	. . DOOR ASSY,MAIN SECTION.	1	
		/ATTACHING PARTS/		
- 47	AN507-832	. . SCREW	6	
		----*----		
	95-110014-341	. . . DOOR.	1	
	95-110014-355	. . . COVER	1	
- 48	35-115200-42	. . DOOR,ACCESS /LH WING/	3	
	35-115200-42	. . DOOR,ACCESS /RH WING/	2	
		/ATTACHING PARTS/		
- 49	AN525-832	. . SCREW	4	
		----*----		
- 50	35-115199-12	. . DOOR,ACCESS	1	
		/ATTACHING PARTS/		
- 51	AN526-832-6	. . SCREW	6	
		----*----		
- 52	95-110014-253	. . DOOR,ACCESS	1	
		/ATTACHING PARTS/		
- 53	AN509-8R	. . SCREW	6	
		----*----		
- 54	95-110014-297	. . HINGE,WING MAIN SECTION OUTBD LH.	1	
	95-110014-298	. . HINGE,WING MAIN SECTION OUTBD RH.	1	
- 55	95-110014-321	. . HINGE,WING MAIN SECTION INBD LH	1	
	95-110014-322	. . HINGE,WING MAIN SECTION INBD RH	1	
- 56	95-110024-1	. . DOOR ASSY,WING FUEL TANK LH	1	
	95-110024-2	. . DOOR ASSY,WING FUEL TANK RH	1	
		/ATTACHING PARTS/		
- 57	AN509-8R	. . SCREW	9	
		----*----		
	95-170000-601	. TIP ASSY,WING LH.	1	
		/SPARE ASSY,SEE SECTION 4 FOR COMPONENTS/		
		. TIP ASSY,WING LH /SEE FIG. 19/.		
	95-170000-602	. TIP ASSY,WING RH.	1	
		/SPARE ASSY,SEE SECTION 4 FOR COMPONENTS/		
		. TIP ASSY,WING RH /SEE FIG. 19/.		
		/ATTACHING PARTS/		
- 58	AN525-8R	. SCREW	AR	
	AN960-8	. WASHER.	2	
	AN365-832	. NUT	2	
		----*----		
- 59	414-181500-53	. . DOOR,WING TIP ACCESS.	1	
		/ATTACHING PARTS/		
- 60	AN515B8	. . SCREW	8	
		----*----		
		. FILLET INSTL,WING NACELLE		
- 60A	95-110038-3	. . WELD ASSY,INBD LH ENGINE NACELLE FILLET . .	1	
- 60B	95-110038-5	. . WELD ASSY,OUTBD LH ENGINE NACELLE FILLET. .	1	
	95-110038-4	. . WELD ASSY,INBD RH ENGINE NACELLE FILLET . .	1	
	95-110038-6	. . WELD ASSY,OUTBD RH ENGINE NACELLE FILLET. .	1	
		/ATTACHING PARTS/		
- 60C	AN525-10R	. . SCREW	10	
		----*----		
- 60D	112416	. . EXTRUSION,FILLET RUBBER SEAL.	1	1
- 60E	111722-05300	. . EXTRUSION,FILLET RUBBER	1	
- 60F	111722-05400	. . EXTRUSION,FILLET RUBBER	1	
		. NACELLE INSTL,LH ENGINE		
		. NACELLE INSTL,RH ENGINE		
	95-980001-601	. . NACELLE ASSY,LH ENGINE /SPARE ASSY, ...	1	
		SEE SECTION 4 FOR COMPONENTS/		
	95-980001-602	. . NACELLE ASSY,RH ENGINE /SPARE ASSY, ...	1	
		SEE SECTION 4 FOR COMPONENTS/		

FIG. & INDEX NO.	PART NO.	DESCRIPTION 1 2 3 4 5 6 7	UNITS PER ASSY	USABLE ON CODE
		. . NACELLE ASSY,LH ENGINE.		
		. . NACELLE ASSY,RH ENGINE.		
18	95-980001-33	. . . DOOR,LH ENGINE NACELLE TOP.	1	3
	95-980001-34	. . . DOOR,RH ENGINE NACELLE TOP.	1	3
		/ATTACHING PARTS/		
	AN515-8	. . . SCREW	16	
		----*----		
- 61	95-980001-185	. . . DOOR,LH ENGINE NACELLE TOP.	1	4
	95-980001-186	. . . DOOR,RH ENGINE NACELLE TOP.	1	4
		/ATTACHING PARTS/		
- 62	AN507-832	. . . SCREW	12	
		----*----		
	95-980001-53	. . . DOOR,LH ENGINE NACELLE.	1	3
	95-980001-54	. . . DOOR,RH ENGINE NACELLE.	1	3
		/ATTACHING PARTS/		
	AN525-8	. . . SCREW	18	
		----*----		
- 63	95-980001-193	. . . DOOR,LH ENGINE NACELLE.	1	4
	95-980001-194	. . . DOOR,RH ENGINE NACELLE.	1	4
		/ATTACHING PARTS/		
- 64	F4-30	. . . FASTENER,DZUS	11	
	4	. . . RING,DZUS RETAINER.	11	
	S4-250	. . . SPRING,DZUS FASTENER.	11	
		----*----		
	95-980001-123	. . . DOOR,LH ENGINE NACELLE.	1	3
	95-980001-124	. . . DOOR,RH ENGINE NACELLE.	1	3
		/ATTACHING PARTS/		
	AN525-8	. . . SCREW	26	
		----*----		
- 65	95-980001-189	. . . DOOR,LH ENGINE NACELLE.	1	4
	95-980001-190	. . . DOOR,RH ENGINE NACELLE.	1	4
		/ATTACHING PARTS/		
- 66	F4-30	. . . FASTENER,DZUS	13	
	4	. . . RING,DZUS RETAINER.	13	
	S4-250	. . . SPRING,DZUS FASTENER.	13	
		----*----		
- 66A	95-980001-89	. . . FAIRING,LH ENGINE NACELLE	1	
	95-980001-90	. . . FAIRING,RH ENGINE NACELLE	1	
		/ATTACHING PARTS/		
- 66B	AN525-8	. . . SCREW	AR	
		----*----		
- 66C	95-980001-127	. . . TROUGH,LH ENGINE NACELLE.	1	
	95-980001-128	. . . TROUGH,RH ENGINE NACELLE.	1	
		/ATTACHING PARTS/		
- 66D	AN525-10	. . . SCREW	5	
		----*----		
- 66E	95-980001-143	. . . ANGLE,LH ENGINE NACELLE ATTACH.	1	
	95-980001-144	. . . ANGLE,RH ENGINE NACELLE ATTACH.	1	
		/ATTACHING PARTS/		
- 66F	AN525-10	. . . SCREW	7	
		----*----		
- 67	95-980001-67	. . . ANGLE,LH ENGINE NACELLE ATTACH.	1	
	95-980001-68	. . . ANGLE,RH ENGINE NACELLE ATTACH.	1	
		/ATTACHING PARTS/		
- 68	AN525-10	. . . SCREW	5	
		----*----		
- 69	95-980001-93	. . . ANGLE,LH ENGINE NACELLE ATTACH.	1	
	95-980001-94	. . . ANGLE,RH ENGINE NACELLE ATTACH.	1	
		/ATTACHING PARTS/		
- 70	AN525-10	. . . SCREW	5	
		----*----		

FIG. & INDEX NO.	PART NO.	1 2 3 4 5 6 7 DESCRIPTION	UNITS PER ASSY	USABLE ON CODE
18 - 71	35-165004	. ROLLER ASSY,FWD FLAP HINGE /SEE FIG. 22/. . .	2	
- 72	BC22062	. ROLLER ASSY,AFT FLAP HINGE /SEE FIG. 22/. . .	2	

CODE	EFFECTIVITY	CODE	EFFECTIVITY
1	TD-1 THRU TD-302	2	TD-303 THRU TD-525
3	TD-1 THRU TD-94	4	TD-95 AND AFTER
5	TD-526 AND AFTER	6	TD-1 THRU TD-525

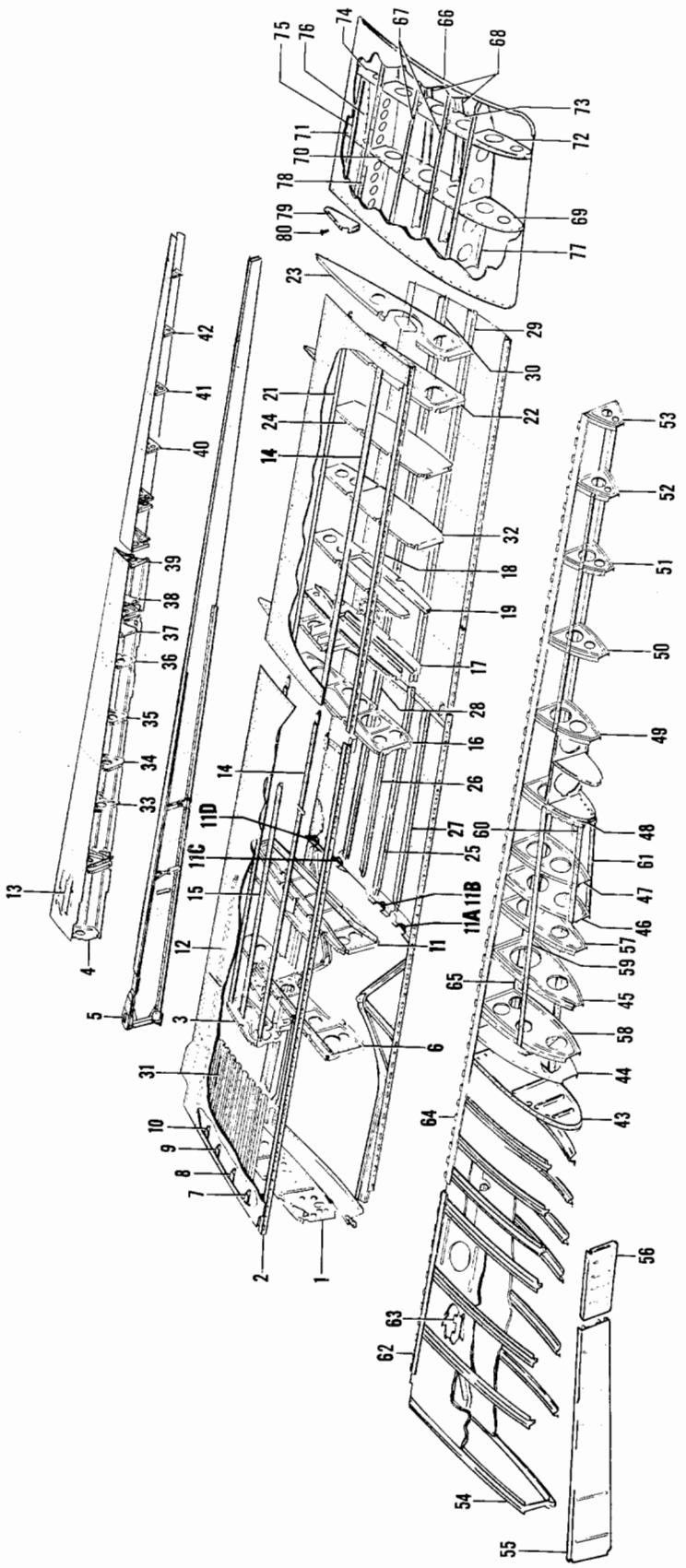

Figure 19. Wing Structure (TD-1 thru TD-525)

FIG. & INDEX NO.	PART NO.	DESCRIPTION 1 2 3 4 5 6 7	UNITS PER ASSY	USABLE ON CODE
19	95-110014-601	SECTION ASSY.	1	5
		/SPARE ASSY,SEE SECTION 4 FOR COMPONENTS/		
		SECTION ASSY,WING LH /SEE FIG. 18 FOR NHA/. . .		5
	95-110014-602	SECTION ASSY,WING RH.	1	5
		/SPARE ASSY,SEE SECTION 4 FOR COMPONENTS/		
		SECTION ASSY,WING RH /SEE FIG. 18 FOR NHA/. . .		5
	95-110031-601	. RIB ASSY,WING LH.	1	5
		/SPARE ASSY,SEE SECTION 4 FOR COMPONENTS/		
- 1		. RIB ASSY,WING LH STA 23.881		5
	95-110032-601	. RIB ASSY,RH	1	5
		/SPARE ASSY,SEE SECTION 4 FOR COMPONENTS/		
		. RIB ASSY,RH STA 23.881.		5
- 2	95-110014-295	. HINGE,LH.	1	5
	95-110014-296	. HINGE,RH.	1	5
	95-110030-601	. RIB ASSY,WING LH.	1	5
		/SPARE ASSY,SEE SECTION 4 FOR COMPONENTS/		
- 3		. RIB ASSY,WING LH.		5
	95-110039	. RIB ASSY,WING RH.	1	5
- 4	95-110037	. RIB,WING LH	1	5
	95-110036	. RIB,WING RH	1	5
	95-110022-601	. SPAR ASSY,WING LH REAR.	1	5
		/SPARE ASSY,SEE SECTION 4 FOR COMPONENTS/		
- 5		. SPAR ASSY,WING LH REAR.		5
	95-110022-602	. SPAR ASSY,WING RH REAR.	1	5
		/SPARE ASSY,SEE SECTION 4 FOR COMPONENTS/		
		. SPAR ASSY,WING RH REAR.		5
	95-110026-601	. RIB ASSY,WING LH.	1	5
		/SPARE ASSY,SEE SECTION 4 FOR COMPONENTS/		
- 6		. RIB ASSY,WING LH.		5
	95-110027-601	. RIB ASSY,WING RH.	1	5
		/SPARE ASSY,SEE SECTION 4 FOR COMPONENTS/		
		. RIB ASSY,WING RH.		5
- 7	95-110014-139	. STRINGER,LH	1	5
	95-110014-142	. STRINGER,RH	1	5
- 8	95-110014-143	. STRINGER,LH	1	5
	95-110014-146	. STRINGER,RH	1	5
- 9	95-110014-147	. STRINGER,LH	1	5
	95-110014-150	. STRINGER,RH	1	5
- 10	95-110014-265	. STRINGER,LH	1	5
	95-110014-268	. STRINGER,RH	1	5
	95-110023-601	. RIB ASSY,WING LH.	1	5
		/SPARE ASSY,SEE SECTION 4 FOR COMPONENTS/		
- 11		. RIB ASSY,WING LH.		5
	95-110023-602	. RIB ASSY,WING RH.	1	5
		/SPARE ASSY,SEE SECTION 4 FOR COMPONENTS/		
		. RIB ASSY,WING RH.		5
- 11A	35-115200-26	. SEAL,LANDING GEAR DOOR FWD.	1	5
- 11B	35-115200-24	. SEAL,LANDING GEAR DOOR FWD CENTER	1	5
- 11C	35-115200-22	. SEAL,LANDING GEAR DOOR AFT CENTER	1	5
- 11D	35-115200-20	. SEAL,LANDING GEAR DOOR AFT.	1	5
- 12	95-110014-269	. STRINGER,LH	1	5
	95-110014-270	. STRINGER,RH	1	5
- 13	35-115194-38	. STRINGER,LH	1	1
	95-110014-369	. STRINGER,LH	1	2
	35-115194-40	. STRINGER,RH	1	1
	95-110014-371	. STRINGER,RH	1	2
- 14	95-110014-357	. STRINGER,MAIN SECTION LH.	1	5
	95-110014-358	. STRINGER,MAIN SECTION RH.	1	5
- 15	95-110014-275	. STRINGER,MAIN SECTION LH.	1	5
	95-110014-276	. STRINGER,MAIN SECTION RH.	1	5
- 16	95-110014-291	. RIB ASSY,MAIN SECTION LH.	1	5
	95-110014-292	. RIB ASSY,MAIN SECTION RH.	1	5
- 17	95-110014-99	. RIB ASSY,MAIN SECTION LH.	1	5
	95-110014-100	. RIB ASSY,MAIN SECTION RH.	1	5
- 18	95-110014-159	. HINGE,MAIN SECTION LH	1	5
	95-110014-160	. HINGE,MAIN SECTION RH	1	5
- 19	95-110014-85	. RIB ASSY,MAIN SECTION LH.	1	5

FIG. & INDEX NO.	PART NO.	DESCRIPTION 1 2 3 4 5 6 7	UNITS PER ASSY	USABLE ON CODE
19 - 20	95-110014-86	RIB ASSY,MAIN SECTION RH	1	5
- 21	95-110014-197	STRINGER,MAIN SECTION LH	1	5
	95-110014-198	STRINGER,MAIN SECTION RH	1	5
- 22	95-110014-35	RIB ASSY,MAIN SECTION LH	1	5
	95-110014-34	RIB ASSY,MAIN SECTION RH	1	5
- 23	95-110011	RIB ASSY,MAIN SECTION	1	5
- 24	95-110014-47	RIB ASSY,MAIN SECTION LH	1	5
	95-110014-48	RIB ASSY,MAIN SECTION RH	1	5
- 25	95-110014-227	STRINGER,LH	1	5
	95-110014-228	STRINGER,RH	1	5
- 26	95-110014-225	STRINGER,LH	1	5
	95-110014-226	STRINGER,RH	1	5
- 27	95-110014-229	STRINGER,LH	1	5
	95-110014-230	STRINGER,RH	1	5
- 28	95-110014-221	STRINGER,LH	1	5
	95-110014-222	STRINGER,RH	1	5
- 29	95-110014-223	STRINGER,LH	1	5
	95-110014-224	STRINGER,RH	1	5
- 30	95-110014-263	STRINGER,LH	1	5
	95-110014-264	STRINGER,RH	1	5
- 31	95-110014-258	WALKWAY ASSY,WING RH	1	5
- 32	95-110014-77	RIB ASSY,LH	1	5
	95-110014-78	RIB ASSY,RH	1	5
- 33	95-110014-133	RIB ASSY,STA 45.00 TRAILING EDGE LH	1	5
	95-110014-308	RIB ASSY,STA 45.00 TRAILING EDGE RH	1	5
- 34	95-110014-127	RIB ASSY,STA 55.5 TRAILING EDGE LH	1	5
	95-110014-128	RIB ASSY,STA 55.5 TRAILING EDGE RH	1	5
- 35	95-110014-153	RIB,STA 66.00 TRAILING EDGE LH	1	5
	95-110014-154	RIB,STA 66.00 TRAILING EDGE RH	1	5
- 36	95-110014-191	RIB,STA 80.047 TRAILING EDGE LH	1	5
	95-110014-192	RIB,STA 80.047 TRAILING EDGE RH	1	5
- 37	95-110014-315	RIB,STA 89.607 TRAILING EDGE LH	1	5
	95-110014-316	RIB,STA 89.607 TRAILING EDGE RH	1	5
- 38	95-110014-317	RIB,STA 98.750 TRAILING EDGE LH	1	5
	95-110014-318	RIB,STA 98.750 TRAILING EDGE RH	1	5
- 39	95-110014-117	RIB,FLAP & AILERON DIVIDING LH	1	5
	95-110014-118	RIB,FLAP & AILERON DIVIDING RH	1	5
- 40	95-110014-167	RIB,STA 136.188 TRAILING EDGE LH	1	5
	95-110014-168	RIB,STA 136.188 TRAILING EDGE RH	1	5
- 41	95-110014-63	RIB,STA 148.875 TRAILING EDGE LH	1	5
	95-110014-64	RIB,STA 148.875 TRAILING EDGE RH	1	5
- 42	95-110014-41	RIB,STA 162.562 TRAILING EDGE LH	1	5
	95-110014-42	RIB,STA 162.562 TRAILING EDGE RH	1	5
		EDGE ASSY,WING STRUCTURE LEADING LH /SEE FIG. 18 FOR NHA/		3
		EDGE ASSY,WING STRUCTURE LEADING LH /SEE FIG. 18 FOR NHA/		4
		EDGE ASSY,WING STRUCTURE LEADING RH /SEE FIG. 18 FOR NHA/		3
		EDGE ASSY,WING STRUCTURE LEADING RH /SEE FIG. 18 FOR NHA/		4
- 43	95-110015-81	RIB ASSY,WING STA 73.00 LH	1	5
	95-110015-82	RIB ASSY,WING STA 73.00 RH	1	5
- 44	95-110015-97	RIB ASSY,WING STA 83.547 LH	1	5
	95-110015-98	RIB ASSY,WING STA 83.547 RH	1	5
- 45	95-110015-83	RIB ASSY,WING STA 94.094 LH	1	5
	95-110015-84	RIB ASSY,WING STA 94.094 RH	1	5
- 46	95-110015-85	RIB ASSY,WING STA 103.641 LH	1	5
	95-110015-86	RIB ASSY,WING STA 103.641 RH	1	5
- 47	95-110015-163	RIB ASSY,WING STA 113.172 LH	1	5
	95-110015-164	RIB ASSY,WING STA 113.172 RH	1	5
- 48	95-110015-161	RIB ASSY,WING STA 122.750 LH	1	5
	95-110015-162	RIB ASSY,WING STA 122.750 RH	1	5
- 49	95-110015-157	RIB ASSY,WING STA 136.188 LH	1	5
	95-110015-158	RIB ASSY,WING STA 136.188 RH	1	5

FIG. & INDEX NO.	PART NO.	DESCRIPTION 1 2 3 4 5 6 7	UNITS PER ASSY	USABLE ON CODE
19 - 50	95-110015-155	. RIB ASSY,WING STA 148.875 LH.	1	5
	95-110015-156	. RIB ASSY,WING STA 148.875 RH.	1	5
- 51	95-110015-153	. RIB ASSY,WING STA 162.536 LH.	1	5
	95-110015-154	. RIB ASSY,WING STA 162.536 RH.	1	5
- 52	35-115035	. RIB ASSY,WING STA 175.281 LH.	1	5
	35-115035-1	. RIB ASSY,WING STA 175.281 RH.	1	5
- 53	50-115034	. RIB ASSY,WING STA 191.0 LH.	1	5
	50-115034-1	. RIB ASSY,WING STA 191.0 RH.	1	5
- 54	95-110015-7	. RIB ASSY,WING STA 23.801 LH	1	5
	95-110015-8	. RIB ASSY,WING STA 28.801 RH	1	5
	95-110015-63	. SPAR ASSY,LEADING EDGE LH	1	5
	95-110015-64	. SPAR ASSY,LEADING EDGE RH	1	5
- 55	95-110015-67	. . SPAR,LEADING EDGE INBD LH	1	5
	95-110015-68	. . SPAR,LEADING EDGE INBD RH	1	5
- 56	95-110015-95	. . SPAR,LEADING EDGE OUTBD LH.	1	5
	95-110015-96	. . SPAR,LEADING EDGE OUTBD RH.	1	5
- 57	95-110015-135	. RIB ASSY,WING STA 98.867 LH	1	5
	95-110015-136	. RIB ASSY,WING STA 98.867 RH	1	5
- 58	95-110015-131	. RIB ASSY,WING STA 89.820 LH	1	5
	95-110015-132	. RIB ASSY,WING STA 89.820 RH	1	5
- 59	95-110015-99	. STRINGER,LEADING EDGE LH.	1	5
	95-110015-100	. STRINGER,LEADING EDGE RH.	1	5
- 60	95-110015-57	. STRINGER,LEADING EDGE UPPER LH.	1	5
	95-110015-58	. STRINGER,LEADING EDGE UPPER RH.	1	5
- 61	95-110015-55	. STRINGER,LEADING EDGE LOWER LH.	1	5
	95-110015-56	. STRINGER,LEADING EDGE LOWER RH.	1	5
- 62	50-110010-18	. HINGE,UPPER INBD LH	1	5
	50-110010-19	. HINGE,UPPER INBD RH	1	5
- 63	50-110010-20	. HINGE,LOWER INBD LH	1	5
	50-110010-21	. HINGE,LOWER INBD RH	1	5
- 64	50-110010-28	. HINGE,UPPER OUTBD LH.	1	5
	50-110010-29	. HINGE,UPPER OUTBD RH.	1	5
- 65	50-110010-30	. HINGE,LOWER OUTBD LH.	1	5
	50-110010-31	. HINGE,LOWER OUTBD RH.	1	5
	95-170000-601	TIP ASSY,WING STRUCTURE LH.	1	5
		/SPARE ASSY,SEE SECTION 4 FOR COMPONENTS/		
		TIP ASSY,WING STRUCTURE LH.		5
		/SEE FIG. 18 FOR NHA/		
		TIP ASSY,WING STRUCTURE RH.		5
		/SPARE ASSY,SEE SECTION 4 FOR COMPONENTS/		
		TIP ASSY,WING STRUCTURE RH.		5
		/SEE FIG. 18 FOR NHA/		
- 66	95-170000-45	. CAP ASSY,WING TIP LH.	1	5
	95-170000-46	. CAP ASSY,WING TIP RH.	1	5
- 67	95-170000-35	. STRINGER,WING TIP TOP LH.	2	5
	95-170000-36	. STRINGER,WING TIP TOP RH.	2	5
- 68	95-170000-37	. STRINGER,WING TIP BOTTOM LH	2	5
	95-170000-38	. STRINGER,WING TIP BOTTOM RH	2	5
- 69	95-170000-19	. RIB,WING TIP LH	1	5
	95-170000-20	. RIB,WING TIP RH	1	5
- 70	95-170000-21	. RIB,WING TIP LH	1	5
	95-170000-22	. RIB,WING TIP RH	1	5
- 71	95-170000-23	. RIB,WING TIP LH	1	5
	95-170000-24	. RIB,WING TIP RH	1	5
- 72	95-170000-25	. RIB,WING TIP LH	1	5
	95-170000-26	. RIB,WING TIP RH	1	5
- 73	95-170000-65	. RIB,WING TIP LH	1	5
	95-170000-66	. RIB,WING TIP RH	1	5
- 74	95-170000-29	. RIB,WING TIP LH	1	5
	95-170000-30	. RIB,WING TIP RH	1	5
- 75	95-170000-39	. STRINGER,TOP LH	1	5
	95-170000-40	. STRINGER,TOP RH	1	5
- 76	95-170000-41	. STRINGER,BOTTOM LH.	1	5
	95-170000-42	. STRINGER,BOTTOM RH.	1	5
- 77	95-170000-31	. SPAR,WING TOP LH.	1	5
	95-170000-32	. SPAR,WING TIP RH.	1	5

FIG. & INDEX NO.	PART NO.	DESCRIPTION 1 2 3 4 5 6 7	UNITS PER ASSY	USABLE ON CODE
19 - 78	95-170000-33	. SPAR,WING TIP LH.	1	5
	95-170000-34	. SPAR,WING TIP RH.	1	5
- 79	95-170000-63	. CLOSURE ASSY,WING TIP LH.	1	5
	95-170000-64	. CLOSURE ASSY,WING TIP RH.	1	5
		/ATTACHING PARTS/		
- 80	AN526-832R7	. SCREW	7	
		----*----		

CODE	EFFECTIVITY	CODE	EFFECTIVITY
1	TD-1 THRU TD-123	2	TD-124 THRU TD-525
3	TD-1 THRU TD-302	4	TD-303 THRU TD-525
5	TD-1 THRU TD-525		

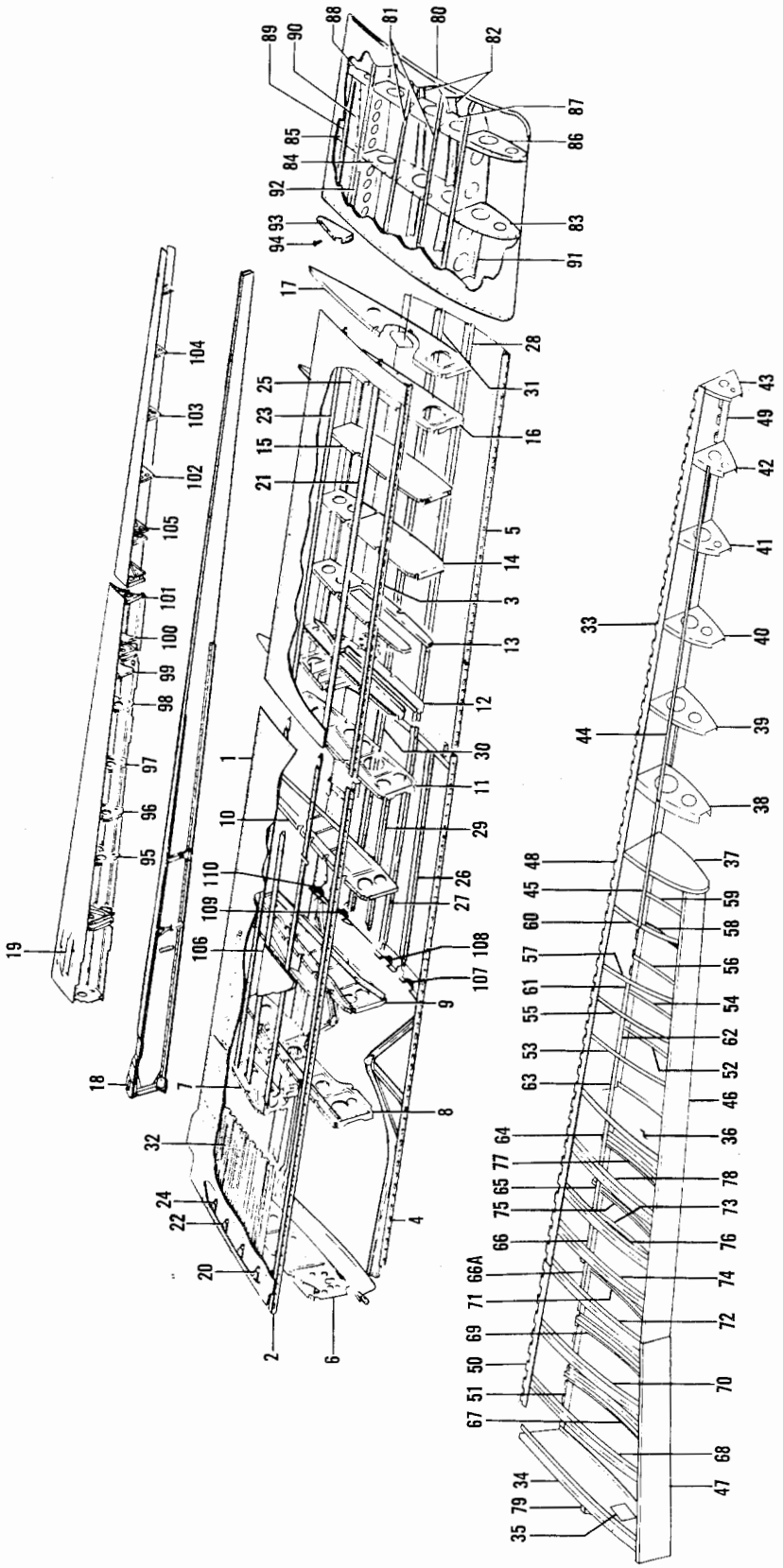

Figure 19A. Wing Structure (TD-526 & After)

FIG. & INDEX NO.	PART NO.	DESCRIPTION 1 2 3 4 5 6 7	UNITS PER ASSY	USABLE ON CODE
19A-	95-110005-615	WING ASSY,LH.	1	1
	95-110005-616	WING ASSY,RH.	1	1
- 1	95-110014-677	. SECTION ASSY,WING LH.	1	1
	95-110014-678	. SECTION ASSY,WING RH.	1	1
- 2	95-110014-295	. . HINGE,UPPER STA 23 TO 108 LH.	1	1
	95-110014-296	. . HINGE,UPPER STA 23 TO 108 RH.	1	1
- 3	95-110014-159	. . HINGE,UPPER STA 108 TO 191 LH	1	1
	95-110014-160	. . HINGE,UPPER STA 108 TO 191 RH	1	1
- 4	95-110014-321	. . HINGE,LOWER STA 23 TO 108 LH.	1	1
	95-110014-322	. . HINGE,LOWER STA 23 TO 108 RH.	1	1
- 5	95-110014-297	. . HINGE,LOWER STA 108 TO 191 LH	1	1
	95-110014-298	. . HINGE,LOWER STA 108 TO 191 RH	1	1
- 6	95-110031-601	. . RIB ASSY,WING STA 23 LH	1	1
	95-110032-601	. . RIB ASSY,WING STA 23 RH	1	1
- 7	95-110030-601	. . RIB ASSY,WING STA 34 LH	1	1
	95-110039-1	. . RIB ASSY,WING STA 34 RH	1	1
- 8	95-110026-601	. . RIB ASSY,WING STA 45 LH	1	1
	95-110027-602	. . RIB ASSY,WING STA 45 RH	1	1
- 9	95-110023-601	. . RIB ASSY,WING STA 66 LH	1	1
	95-110023-602	. . RIB ASSY,WING STA 66 RH	1	1
- 10	95-110014-623	. . RIB ASSY,WING STA 94 LH	1	1
	95-110014-624	. . RIB ASSY,WING STA 94 RH	1	1
- 11	95-110014-641	. . RIB ASSY,WING STA 108 LH.	1	1
	95-110014-642	. . RIB ASSY,WING STA 108 RH.	1	1
- 12	95-110014-613	. . RIB ASSY,WING STA 122 LH.	1	1
	95-110014-614	. . RIB ASSY,WING STA 122 RH.	1	1
- 13	95-110014-615	. . RIB ASSY,WING STA 136 LH.	1	1
	95-110014-616	. . RIB ASSY,WING STA 136 RH.	1	1
- 14	95-110014-617	. . RIB ASSY,WING STA 148 LH.	1	1
	95-110014-618	. . RIB ASSY,WING STA 148 RH.	1	1
- 15	95-110014-619	. . RIB ASSY,WING STA 162 LH.	1	1
	95-110014-620	. . RIB ASSY,WING STA 162 RH.	1	1
- 16	95-110014-639	. . RIB ASSY,WING STA 175 LH.	1	1
	95-110014-640	. . RIB ASSY,WING STA 175 RH.	1	1
- 17	95-110011-3	. . RIB ASSY,WING STA 191 LH.	1	1
	95-110011-4	. . RIB ASSY,WING STA 191 RH.	1	1
- 18	95-110022-601	. . SPAR ASSY,WING REAR LH.	1	1
	95-110022-602	. . SPAR ASSY,WING REAR RH.	1	1
- 19	95-110014-409	. . STRINGER,WING T.E. SKIN LH.	1	1
	95-110014-412	. . STRINGER,WING T.E. SKIN RH.	1	1
- 20	95-110014-143	. . STRINGER,WING TOP 42% INBD LH	1	1
	95-110014-146	. . STRINGER,WING TOP 42% INBD RH	1	1
- 21	95-110014-357	. . STRINGER,WING TOP 42% OUTBD LH.	1	1
	95-110014-358	. . STRINGER,WING TOP 42% OUTBD RH.	1	1
- 22	95-110014-147	. . STRINGER,WING TOP 56% INBD LH	1	1
	95-110014-150	. . STRINGER,WING TOP 56% INBD RH	1	1
- 23	95-110014-197	. . STRINGER,WING TOP 56% OUTBD LH.	1	1
	95-110014-198	. . STRINGER,WING TOP 56% OUTBD RH.	1	1
- 24	95-110014-265	. . STRINGER,WING TOP 63% INBD LH	1	1
	95-110014-268	. . STRINGER,WING TOP 63% INBD RH	1	1
- 25	95-110014-269	. . STRINGER,WING TOP 63% OUTBD LH.	1	1
	95-110014-270	. . STRINGER,WING TOP 63% OUTBD RH.	1	1
- 26	95-110014-229	. . STRINGER,WING BOTTOM 63% INBD LH.	1	1
	95-110014-230	. . STRINGER,WING BOTTOM 63% INBD RH.	1	1
- 27	95-110014-227	. . STRINGER,WING BOTTOM 42% INBD LH.	1	1
	95-110014-228	. . STRINGER,WING BOTTOM 42% INBD RH.	1	1
- 28	95-110014-223	. . STRINGER,WING BOTTOM 42% OUTBD LH	1	1
	95-110014-224	. . STRINGER,WING BOTTOM 42% OUTBD RH	1	1
- 29	95-110014-225	. . STRINGER,WING BOTTOM 49% INBD LH.	1	1
	95-110014-226	. . STRINGER,WING BOTTOM 49% INBD RH.	1	1
- 30	95-110014-221	. . STRINGER,WING BOTTOM 56% INBD LH.	1	1
	95-110014-222	. . STRINGER,WING BOTTOM 56% INBD RH.	1	1
- 31	95-110014-263	. . STRINGER,WING BOTTOM 56% OUTBD LH	1	1
	95-110014-264	. . STRINGER,WING BOTTOM 56% OUTBD RH	1	1
- 32	95-110014-612	. . WALKWAY ASSY,WING RH.	1	1

FIG. & INDEX NO.	PART NO.	DESCRIPTION 1 2 3 4 5 6 7	UNITS PER ASSY	USABLE ON CODE
19A- 33	95-110005-613	LEADING EDGE ASSY,LH.	1	1
	95-110005-614	LEADING EDGE ASSY,RH.	1	1
- 34	95-110005-609	. . RIB ASSY,WING STA 23.801 LH	1	1
	95-110005-610	. . RIB ASSY,WING STA 23.801 RH	1	1
- 35	35-115166-14	. . DOOR.	1	1
		/ATTACHING PARTS/		
	104215-00300	. . . PIN,HINGE	2	
		----*----		
- 36	95-110015-81	. . RIB ASSY,WING STA 73.00 LH.	1	1
	95-110015-82	. . RIB ASSY,WING STA 73.00 RH.	1	1
- 37	35-115431-5	. . RIB ASSY,WING STA 113.172 LH.	1	1
	35-115431-6	. . RIB ASSY,WING STA 113.172 RH.	1	1
- 38	35-115046	. . RIB ASSY,WING STA 122.750 LH.	1	1
	35-115046-1	. . RIB ASSY,WING STA 122.750 RH.	1	1
- 39	95-110015-157	. . RIB ASSY,WING STA 136.188 LH.	1	1
	95-110015-158	. . RIB ASSY,WING STA 136.188 RH.	1	1
- 40	95-110015-155	. . RIB ASSY,WING STA 148.875 LH.	1	1
	95-110015-156	. . RIB ASSY,WING STA 148.875 RH.	1	1
- 41	95-110015-153	. . RIB ASSY,WING STA 162.536 LH.	1	1
	95-110015-154	. . RIB ASSY,WING STA 162.536 RH.	1	1
- 42	35-115035	. . RIB ASSY,WING STA 175.281 LH.	1	1
	35-115035-1	. . RIB ASSY,WING STA 175.281 RH.	1	1
- 43	35-115034	. . RIB ASSY,WING STA 191.00 LH	1	1
	35-115034-1	. . RIB ASSY,WING STA 191.00 RH	1	1
- 44	96-110007-3	. . STRINGER,LEADING EDGE OUTBOARD LH	1	1
	96-110007-4	. . STRINGER,LEADING EDGE OUTBOARD RH	1	1
- 45	96-110007-5	. . STRINGER,LEADING EDGE OUTBOARD LH	1	1
	96-110007-6	. . STRINGER,LEADING EDGE OUTBOARD RH	1	1
	35-115431-91	. . SPAR ASSY,LEADING EDGE LH	1	1
	35-115431-92	. . SPAR ASSY,LEADING EDGE RH	1	1
- 46	35-115431-83	. . . SPAR,LEADING EDGE OUTBOARD LH	1	1
	35-115431-84	. . . SPAR,LEADING EDGE OUTBOARD RH	1	1
- 47	95-110015-67	. . . SPAR,LEADING EDGE INBOARD LH.	1	1
	95-110015-68	. . . SPAR,LEADING EDGE INBOARD RH.	1	1
- 48	35-115431-113	. . HINGE,UPPER OUTBOARD LH	1	1
	35-115431-114	. . HINGE,1PPER OUTBOARD RH	1	1
- 49	35-115431-115	. . HINGE,LOWER OUTBOARD LH	1	1
	35-115431-116	. . HINGE,LOWER OUTBOARD RH	1	1
- 50	35-115431-109	. . HINGE,UPPER INBOARD LH.	1	1
	35-115431-110	. . HINGE,UPPER INBOARD RH.	1	1
- 51	35-115431-111	. . HINGE,LOWER INBOARD LH.	1	1
	35-115431-112	. . HINGE,LOWER INBOARD RH.	1	1
- 52	35-115431-117	. . ZEE,WING STA 83 LOWER LH.	1	1
	35-115431-118	. . ZEE,WING STA 83 LOWER RH.	1	1
- 53	35-115431-39	. . ZEE,WING STA 83 UPPER LH.	1	1
	35-115431-40	. . ZEE,WING STA 83 UPPER RH.	1	1
- 54	95-110041-15	. . ZEE,WING STA 89 LOWER LH.	1	1
	95-110041-16	. . ZEE,WING STA 89 LOWER RH.	1	1
- 55	95-110041-17	. . ZEE,WING STA 89 UPPER LH.	1	1
	95-110041-18	. . ZEE,WING STA 89 UPPER RH.	1	1
- 56	35-115431-23	. . ZEE,WING STA 94 LOWER LH.	1	1
	35-115431-24	. . ZEE,WING STA 94 LOWER RH.	1	1
- 57	35-115431-27	. . ZEE,WING STA 94 UPPER LH.	1	1
	35-115431-28	. . ZEE,WING STA 94 UPPER RH.	1	1
- 58	95-110041-19	. . ZEE,WING STA 98 LOWER LH.	1	1
	95-110041-20	. . ZEE,WING STA 98 LOWER RH.	1	1
- 59	35-115431-29	. . ZEE,WING STA 103 LOWER LH	1	1
	35-115431-30	. . ZEE,WING STA 103 LOWER RH	1	1
- 60	35-115431-33	. . ZEE,WING STA 103 UPPER LH	1	1
	35-115431-34	. . ZEE,WING STA 103 UPPER RH	1	1
- 61	95-110041-11	. . STRINGER,WING L.E. LH	1	1
	95-110041-12	. . STRINGER,WING L.E. RH	1	1
- 62	95-110041-5	. . STRINGER,WING L.E. LH	1	1
	95-110041-6	. . STRINGER,WING L.E. RH	1	1
- 63	35-115431-9	. . STRINGER,WING L.E. LH	1	1
	35-115431-10	. . STRINGER,WING L.E. RH	1	1

FIG. & INDEX NO.	PART NO.	DESCRIPTION 1 2 3 4 5 6 7	UNITS PER ASSY	USABLE ON CODE
19A- 64	35-115431-7	STRINGER,WING L.E. LH	1	1
	35-115431-8	STRINGER,WING L.E. RH	1	1
- 65	50-110010-50	STRINGER,WING L.E. LH	1	1
	50-110010-51	STRINGER,WING L.E. RH	1	1
- 66	50-110010-52	STRINGER,WING L.E. LH	1	1
	50-110010-53	STRINGER,WING L.E. RH	1	1
- 66A	50-110010-54	STRINGER,WING L.E. LH	1	1
	50-110010-55	STRINGER,WING L.E. RH	1	1
- 67	95-110015-9	FORMER,WING STA 31 LOWER LH	1	1
	95-110015-10	FORMER,WING STA 31 LOWER RH	1	1
- 68	95-110015-11	FORMER,WING STA 31 UPPER LH	1	1
	95-110015-72	FORMER,WING STA 31 UPPER RH	1	1
- 69	95-110015-13	FORMER,WING STA 39 LOWER LH	1	1
	95-110015-14	FORMER,WING STA 39 LOWER RH	1	1
- 70	95-110015-15	FORMER,WING STA 39 UPPER LH	1	1
	95-110015-16	FORMER,WING STA 39 UPPER RH	1	1
- 71	95-110015-17	FORMER,WING STA 47 LOWER LH	1	1
	95-110015-18	FORMER,WING STA 47 LOWER RH	1	1
- 72	95-110015-19	FORMER,WING STA 47 UPPER LH	1	1
	95-110015-20	FORMER,WING STA 47 UPPER RH	1	1
- 73	95-110015-21	FORMER,WING STA 53 LOWER LH	1	1
	95-110015-22	FORMER,WING STA 53 LOWER RH	1	1
- 74	95-110015-23	FORMER,WING STA 53 UPPER LH	1	1
	95-110015-24	FORMER,WING STA 53 UPPER RH	1	1
- 75	95-110015-27	FORMER,WING STA 59 LOWER LH	1	1
	95-110015-28	FORMER,WING STA 59 LOWER RH	1	1
- 76	95-110015-25	FORMER,WING STA 59 UPPER LH	1	1
	95-110015-26	FORMER,WING STA 59 UPPER RH	1	1
- 77	95-110015-31	FORMER,WING STA 66 LOWER LH	1	1
	95-110015-32	FORMER,WING STA 66 LOWER RH	1	1
- 78	95-110015-29	FORMER,WING STA 66 UPPER LH	1	1
	95-110015-30	FORMER,WING STA 66 UPPER RH	1	1
- 79	35-115383-2	RIB,WING INBOARD LH	1	1
	35-115383-3	RIB,WING INBOARD RH	1	1
	95-170000-601	TIP ASSY,LH	1	1
	95-170000-602	TIP ASSY,RH	1	1
- 80	95-170000-45	CAP ASSY,WING TIP LH.	1	1
	95-170000-46	CAP ASSY,WING TIP RH.	1	1
- 81	95-170000-35	STRINGER,WING TIP TOP LH.	1	1
	95-170000-36	STRINGER,WING TIP TOP RH.	1	1
- 82	95-170000-37	STRINGER,WING TIP BOTTOM LH	1	1
	95-170000-38	STRINGER,WING TIP BOTTOM RH	1	1
- 83	95-170000-19	RIB,WING TIP LH	1	1
	95-170000-20	RIB,WING TIP RH	1	1
- 84	95-170000-21	RIB,WING TIP LH	1	1
	95-170000-22	RIB,WING TIP RH	1	1
- 85	95-170000-23	RIB,WING TIP LH	1	1
	95-170000-24	RIB,WING TIP RH	1	1
- 86	95-170000-25	RIB,WING TIP LH	1	1
	95-170000-26	RIB,WING TIP RH	1	1
- 87	95-170000-65	RIB,WING TIP LH	1	1
	95-170000-66	RIB,WING TIP RH	1	1
- 88	95-170000-29	RIB,WING TIP LH	1	1
	95-170000-30	RIB,WING TIP RH	1	1
- 89	95-170000-39	STRINGER,TOP LH	1	1
	95-170000-40	STRINGER,TOP RH	1	1
- 90	95-170000-41	STRINGER,BOTTOM LH.	1	1
	95-170000-42	STRINGER,BOTTOM RH.	1	1
- 91	95-170000-31	SPAR,WING TIP FWD LH.	1	1
	95-170000-32	SPAR,WING TIP FWD RH.	1	1
- 92	95-170000-33	SPAR,WING TIP AFT LH.	1	1
	95-170000-34	SPAR,WING TIP AFT RH.	1	1
- 93	95-170000-63	CLOSURE ASSY,WING TIP LH.	1	1
	95-170000-64	CLOSURE ASSY,WING TIP RH.	1	1
		/ATTACHING PARTS/		
- 94	AN525-832R7	SCREW	7	

----*----

FIG. & INDEX NO.	PART NO.	1 2 3 4 5 6 7 DESCRIPTION	UNITS PER ASSY	USABLE ON CODE
19A- 95	95-110014-133	. . RIB ASSY,STA 45 TRAILING EDGE LH.	1	1
	95-110014-308	. . RIB ASSY,STA 45 TRAILING EDGE RH.	1	1
- 96	95-110014-127	. . RIB ASSY,STA 55 TRAILING EDGE LH.	1	1
	95-110014-128	. . RIB ASSY,STA 55 TRAILING EDGE RH.	1	1
- 97	95-110014-153	. . RIB ASSY,STA 66 TRAILING EDGE LH.	1	1
	95-110014-154	. . RIB ASSY,STA 66 TRAILING EDGE RH.	1	1
- 98	95-110014-191	. . RIB ASSY,STA 80 TRAILING EDGE LH.	1	1
	95-110014-192	. . RIB ASSY,STA 80 TRAILING EDGE RH.	1	1
- 99	95-110014-315	. . RIB ASSY,STA 89 TRAILING EDGE LH.	1	1
	95-110014-316	. . RIB ASSY,STA 89 TRAILING EDGE RH.	1	1
-100	95-110014-317	. . RIB ASSY,STA 98 TRAILING EDGE LH.	1	1
	95-110014-318	. . RIB ASSY,STA 98 TRAILING EDGE RH.	1	1
-101	95-110014-403	. . RIB ASSY,FLAP & AILERON DIVIDING LH	1	1
	95-110014-404	. . RIB ASSY,FLAP & AILERON DIVIDING RH	1	1
-102	95-110014-167	. . RIB,STA 136 TRAILING EDGE LH.	1	1
	95-110014-168	. . RIB,STA 136 TRAILING EDGE RH.	1	1
-103	95-110014-63	. . RIB,STA 148 TRAILING EDGE LH.	1	1
	95-110014-64	. . RIB,STA 148 TRAILING EDGE RH.	1	1
-104	95-110014-41	. . RIB,STA 162 TRAILING EDGE LH.	1	1
	95-110014-42	. . RIB,STA 162 TRAILING EDGE RH.	1	1
-105	95-110014-417	. . RIB,STA 108 TRAILING EDGE LH.	1	1
	95-110014-418	. . RIB,STA 108 TRAILING EDGE RH.	1	1
-106	95-110014-441	. DOUBLER,STA 66.	1	1
-107	35-115200-26	. SEAL,LANDING GEAR DOOR FWD.	1	1
-108	35-115200-24	. SEAL,LANDING GEAR DOOR FWD CENTER	1	1
-109	35-115200-22	. SEAL,LANDING GEAR DOOR AFT CENTER	1	1
-110	35-115200-20	. SEAL,LANDING GEAR DOOR AFT.	1	1

CODE EFFECTIVITY

1 TD-526 AND AFTER

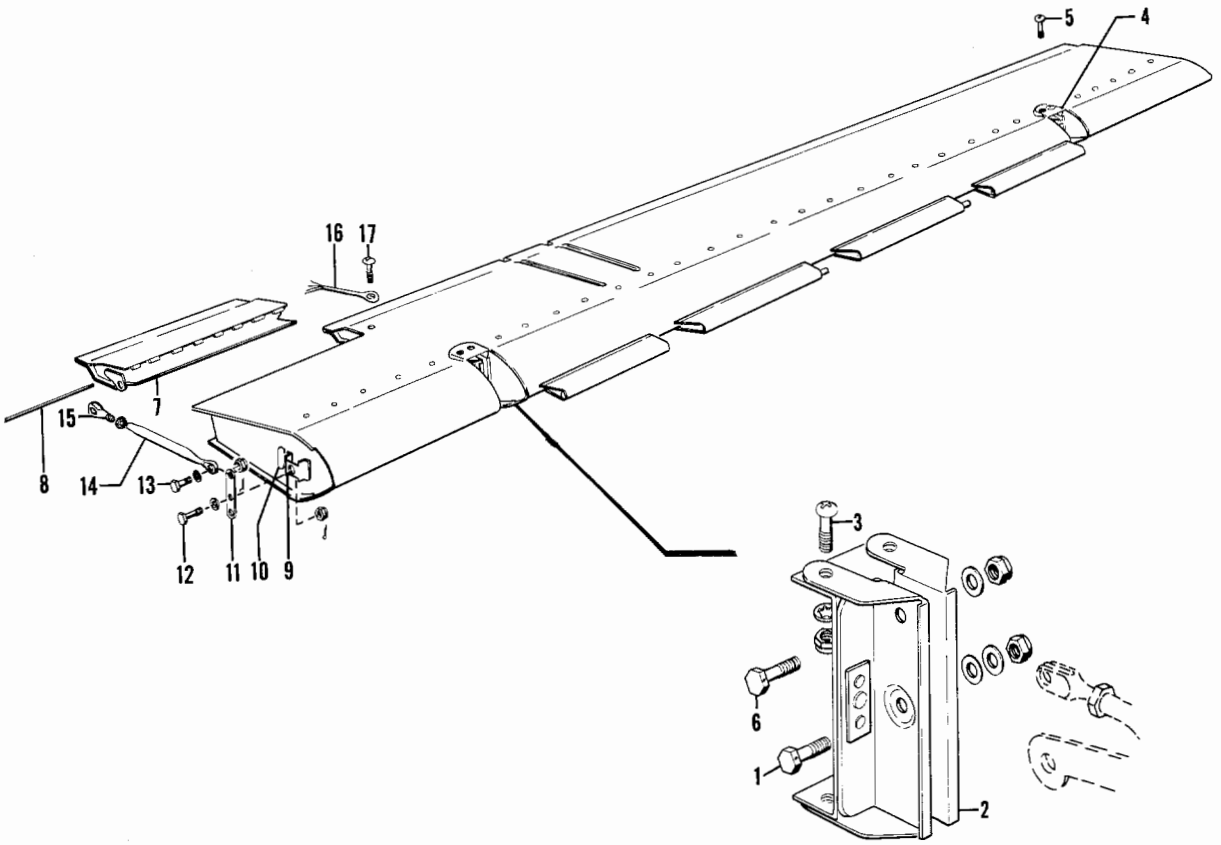

Figure 20. Left Hand Aileron (TD-1 thru TD-452)

FIG. & INDEX NO.	PART NO.	DESCRIPTION 1 2 3 4 5 6 7	UNITS PER ASSY	USABLE ON CODE
		AILERON ASSY,LH /BUY 45-135030-9/		1
		/ATTACHING PARTS/		
20 - 1	AN3-7A/M/	BOLT.	2	
	AN960-10	WASHER.	2	
	AN365-1032	NUT	2	
		----*----		
- 2	45-135035	. HINGE ASSY,AILERON INBD LH.	1	1
		/ATTACHING PARTS/		
- 3	NAS221-9	. SCREW	4	
	AN960-10L	. WASHER.	4	
	112105	. WASHER.	4	
		----*----		
- 4	45-135036	. HINGE ASSY,AILERON OUTBD LH	1	1
		/ATTACHING PARTS/		
- 5	NAS221-9	. SCREW	4	
	AN960-10L	. WASHER.	4	
	112105	. WASHER.	4	
		----*----		
- 6	AN4-10A/M/	. BOLT.	1	1
	AN960-416	. WASHER.	1	1
	AN365-428	. NUT	1	1
- 7	45-135032	. TAB ASSY,AILERON LH	1	1
		/ATTACHING PARTS/		
- 8	45-135030-7	. PIN,AILERON TAB HINGE LH.	1	
		----*----		

FIG. & INDEX NO.	PART NO.	DESCRIPTION 1 2 3 4 5 6 7	UNITS PER ASSY	USABLE ON CODE
20	45-135031-47	. STRUCTURE ASSY,AILERON.	1	1
- 9	45-135031-43	. . BRACKET,AILERON TAB LH.	1	1
- 10	AN7510-1	. . PLACARD,IDENTIFICATION LH	1	1
- 11	45-135039-1	. ARM,AILERON TAB LINKAGE	1	1
		/ATTACHING PARTS/		
- 12	AN173-5	. BOLT.	1	
	AN3-10A	. BOLT.	1	
	AN960D10L	. WASHER.	1	
	AN310-3	. NUT	1	
	AN380-2-2	. PIN,COTTER.	1	
		----*----		
	45-135033	. TUBE ASSY,AILERON TAB ADJUSTABLE LH	1	1
		/ATTACHING PARTS/		
- 13	AN173-5	. BOLT.	2	
	AN960D10L	. WASHER.	2	
	AN310-3	. NUT	2	
	AN380-2-2	. PIN,COTTER.	2	
		----*----		
- 14	45-135033-3	. . TUBE,TAB ADJUSTABLE	1	1
- 15	45-135038	. . END,TAB CONTROL ROD ADJUSTABLE LH	1	1
	AN315-3R	. . NUT	1	1
- 16	SD-3	. DISCHARGER,STATIC /SUPERCEDES AN/ASA-3/ . . .	1	1
		/ATTACHING PARTS/		
- 17	AN526-632-6	. SCREW	1	
	AN960PD6L	. WASHER.	1	
	AN364-632	. NUT	1	
		----*----		

CODE EFFECTIVITY

1 TD-1 THRU TD-452

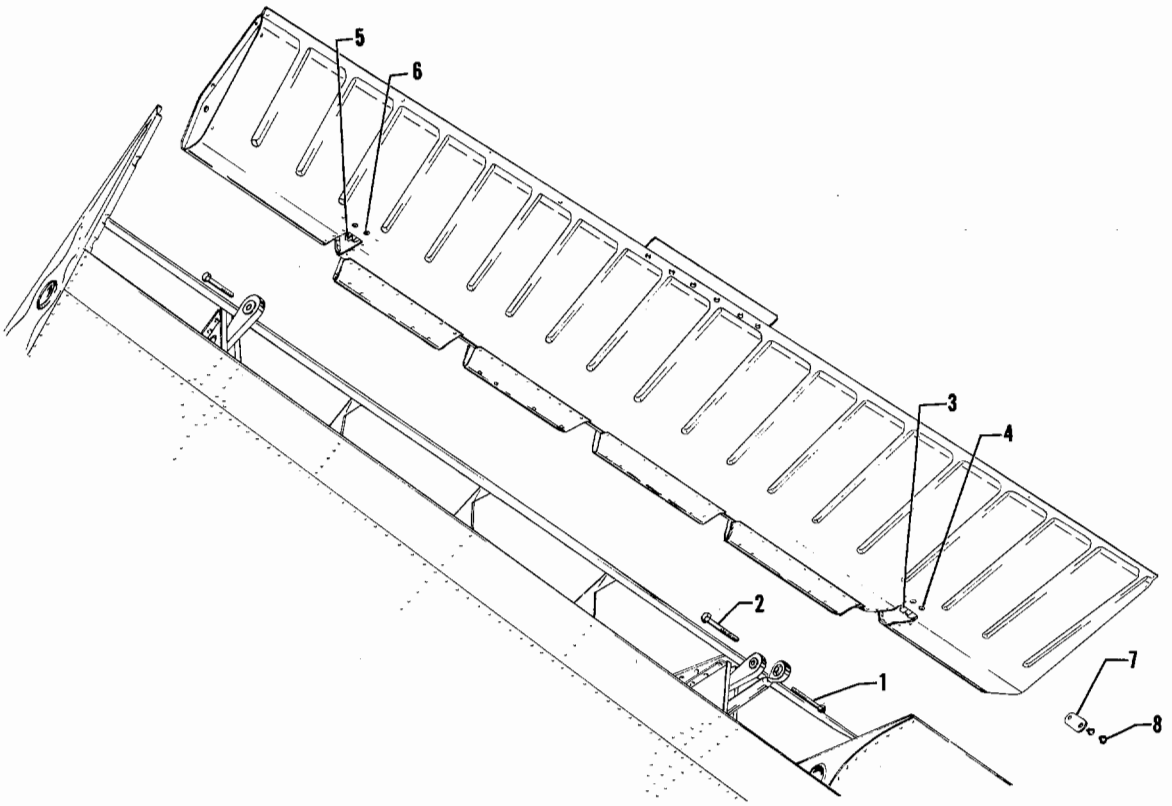

Figure 21. Right Hand Aileron (TD-1 thru TD-452)

FIG. & INDEX NO.	PART NO.	DESCRIPTION 1 2 3 4 5 6 7	UNITS PER ASSY	USABLE ON CODE
21	35-135025	AILERON ASSY,RH /SUPERCEDED BY 33-130000/ . . .	1	1
		/ATTACHING PARTS/		
- 1	AN3-7A	BOLT.	2	
	AN960-10	WASHER.	2	
	AN365-1032	NUT	2	
- 2	AN4-10A	BOLT.	1	
	AN960-416	WASHER.	1	
	AN365-428	NUT	1	
		----*----		
- 3	35-135025-26	. BRACKET,AILERON HINGE INBD.	1	1
		/ATTACHING PARTS/		
- 4	AN221-9	. SCREW	2	
	AN960-10L	. WASHER.	2	
	112105	. WASHER.	2	
		----*----		
- 5	35-135025-24	. BRACKET,AILERON HINGE OUTBD	1	1
		/ATTACHING PARTS/		
- 6	NAS221-9	. SCREW	2	
	AN960-10L	. WASHER.	2	
	112105	. WASHER.	2	
		----*----		
- 7	103637	. PLACARD,IDENTIFICATION.	1	1
		/ATTACHING PARTS/		
- 8	49384	. FASTENER.	1	
		----*----		

CODE EFFECTIVITY

1 TD-1 THRU TD-452

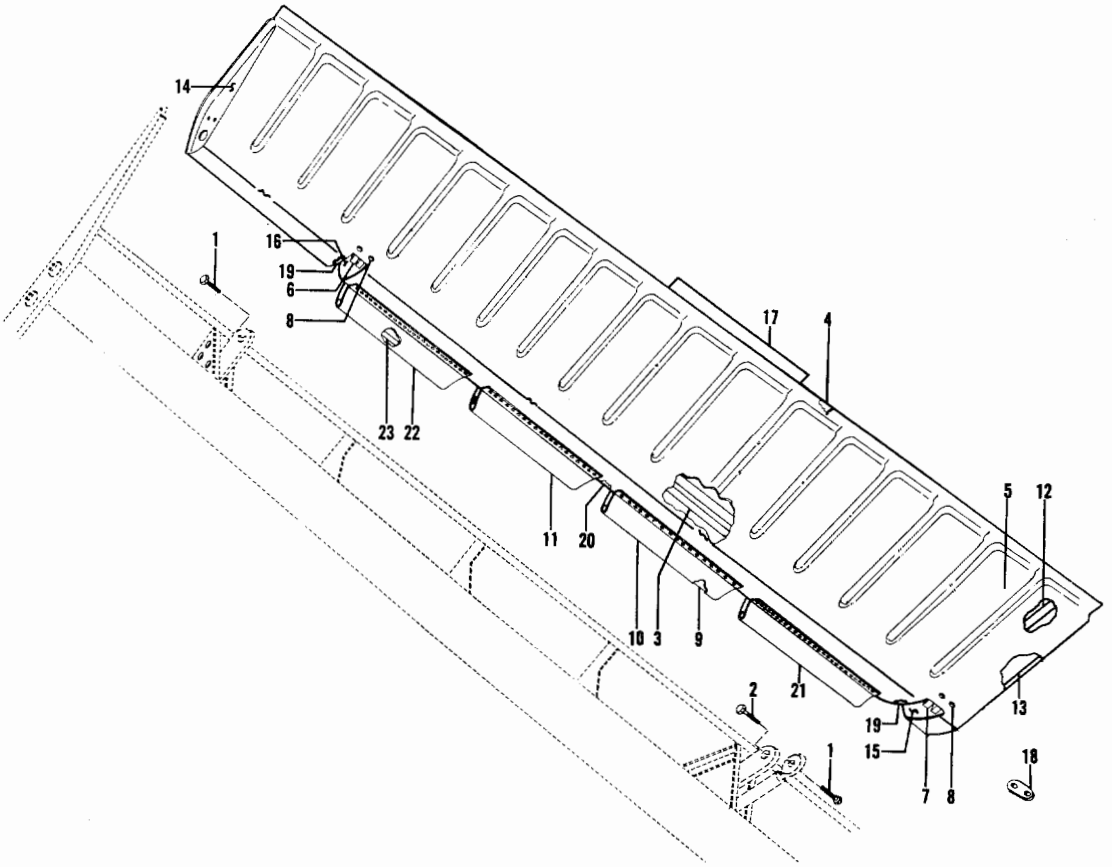

Figure 21A. Left & Right Hand Ailerons (TD-453 & after)

FIG. & INDEX NO.	PART NO.	DESCRIPTION 1 2 3 4 5 6 7	UNITS PER ASSY	USABLE ON CODE
21A-	95-130000	AILERON ASSY.	2	1
		/ATTACHING PARTS/		
- 1	AN3-7A	BOLT.	2	
	AN960-10	WASHER.	2	
	AN365-1032	NUT	2	
- 2	AN4-10A	BOLT.	1	
	AN960-416	WASHER.	1	
	AN365-428	NUT	1	
		----*----		
- 3	95-130000-1	. SPAR.	1	1
- 4	95-130000-5	. SPACER.	1	1
- 5	95-130000-3	. SKIN.	1	1
- 6	35-135025-36	. WELD ASSY,OUTBD BRACKET	1	1
- 7	35-135025-32	. WELD ASSY,INBD BRACKET.	1	1
		/ATTACHING PARTS/		
- 8	NAS221-9	. SCREW	4	
	AN960-10L	. WASHER.	4	
	112105	. WASHER.	4	
	AN366F1032	. NUTPLATE.	4	
		----*----		
- 9	35-135025-2	. WEIGHT.	4	1
- 10	95-130000-13	. CLIP.	1	1
- 11	95-130000-15	. CLIP.	1	1

FIG. & INDEX NO.	PART NO.	DESCRIPTION 1 2 3 4 5 6 7	UNITS PER ASSY	USABLE ON CODE
21A- 12	95-130000-7	RIB	1	1
	95-130000-9	ANGLE,UPPER	1	1
- 13	95-130000-10	ANGLE,LOWER	1	1
- 14	35-135025-10	RIB	1	1
- 15	45-135031-57	RIB	1	1
- 16	45-135031-55	RIB	1	1
- 17	33-130000-7	TAB	1	1
- 18	103637	PLACARD	1	1
		/ATTACHING PARTS/		
	49384	FASTENER	2	
		----*----		
- 19	33-130000-9	DOUBLER	1	1
- 20	33-130000-11	DOUBLER	1	1
- 21	33-130000-17	CLIP	1	1
- 22	33-130000-19	CLIP	1	1
- 23	95-130000-11	WEIGHT	2	1

CODE EFFECTIVITY

1 TD-453 AND AFTER

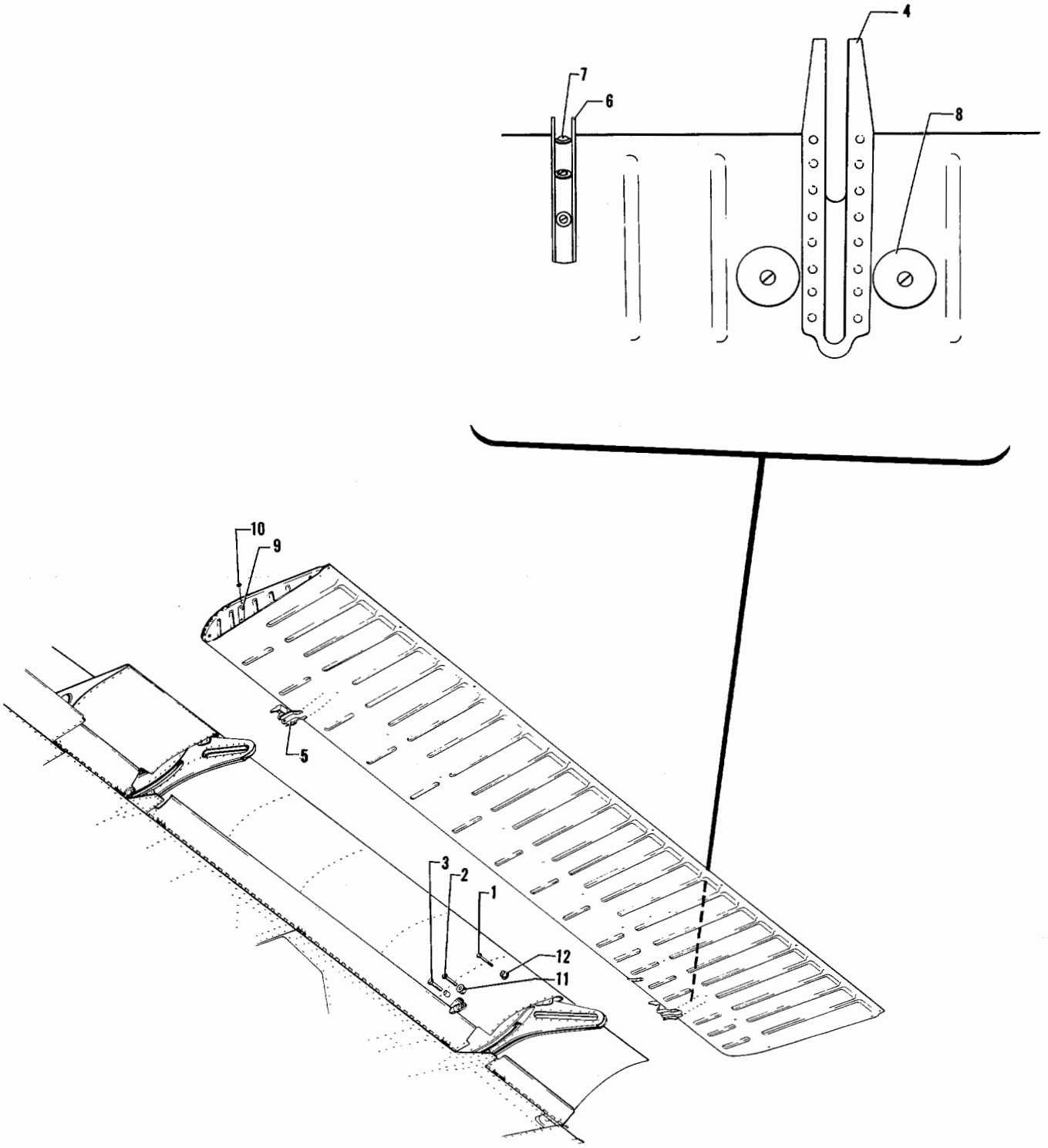

Figure 22. Flap (TD-1 thru TD-452)

FIG. & INDEX NO.	PART NO.	DESCRIPTION 1 2 3 4 5 6 7	UNITS PER ASSY	USABLE ON CODE
22	35-165050-605	FLAP ASSY,LH.	1	1
		/SPARE ASSY,SEE SECTION 4 FOR COMPONENTS/		
		FLAP ASSY,LH.		1
	95-160000-601	FLAP ASSY,LH.	1	2
		/SPARE ASSY,SEE SECTION 4 FOR COMPONENTS/		
		FLAP ASSY,LH.		2
	35-165050-606	FLAP ASSY,RH.	1	1
		/SPARE ASSY,SEE SECTION 4 FOR COMPONENTS/		
		FLAP ASSY,RH.		1
	95-160000-602	FLAP ASSY,RH.	1	2
		/SPARE ASSY,SEE SECTION 4 FOR COMPONENTS/		
		FLAP ASSY,RH.		2
		/ATTACHING PARTS/		
- 1	AN3-12A	BOLT.	2	
- 2	AN3-11A	BOLT.	2	
	AN960-10	WASHER.	4	
	AN365-1032	NUT	4	
- 3	AN4-10A	BOLT.	1	
	100801S5-0500	BUSHING	1	
	AN960-416	WASHER.	1	
	AN365-428	NUT	1	
		----*----		
- 4	35-165050-30	. BRACKET,FLAP INBD LH.	1	3
	35-165050-31	. BRACKET,FLAP INBD RH.	1	3
- 5	35-165050-34	. BRACKET,FLAP OUTBD LH	1	3
	35-165050-35	. BRACKET,FLAP OUTBD RH	1	3
- 6	35-165050-40	. BRACKET,ACTUATOR.	1	3
		/ATTACHING PARTS/		
- 7	AN520-10-8	. SCREW	3	
	100951S063ZT	. WASHER.	3	
		----*----		
- 8	A6914-1024-1	. PLATE,PATCH /TIN/	4	3
- 9	103637	. PLACARD	1	3
		/ATTACHING PARTS/		
- 10	49384	. FASTENER.	2	
		----*----		
- 11	35-165004	ROLLER ASSY,FWD FLAP HINGE.	REF	3
		/SEE FIG. 18 FOR NHA/		
- 12	BC22062	ROLLER ASSY,AFT FLAP HINGE.	REF	3
		/SEE FIG. 18 FOR NHA/		

CODE	EFFECTIVITY	CODE	EFFECTIVITY
1	TD-1 THRU TD-302	2	TD-303 THRU TD-452
3	TD-1 THRU TD-452		

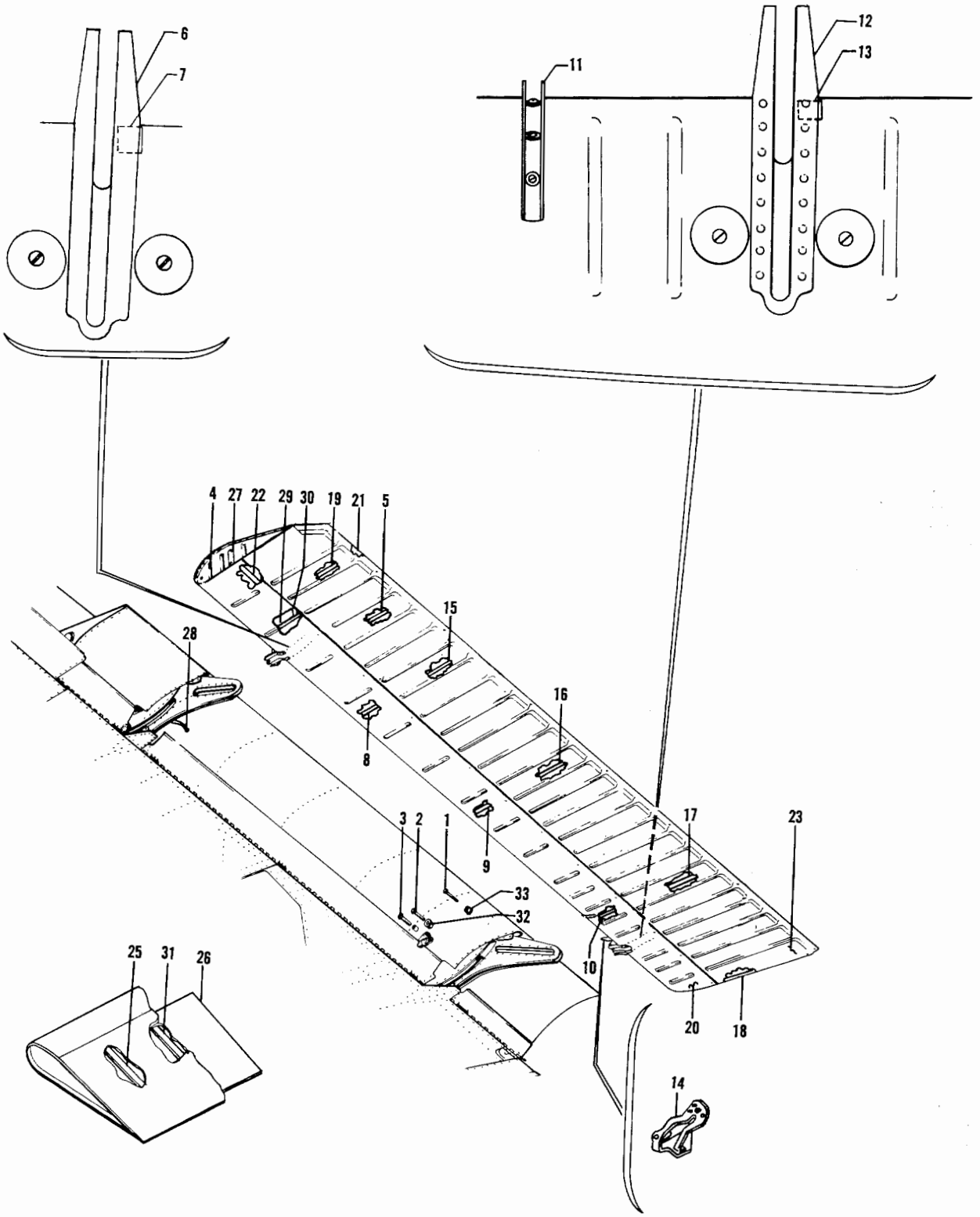

Figure 22A. Flap (TD-453 & After)

FIG. & INDEX NO.	PART NO.	DESCRIPTION 1 2 3 4 5 6 7	UNITS PER ASSY	USABLE ON CODE
22A-	95-160001-601	FLAP ASSY,LH.	1	1
	95-160001-602	FLAP ASSY,RH.	1	1
		/ATTACHING PARTS/		
- 1	AN3-12A	BOLT.	2	
- 2	AN3-11A	BOLT.	2	
	AN960-10	WASHER.	2	
	AN365-1032	NUT	2	
- 3	AN4-10A	BOLT.	1	
	100801S5-0500	BUSHING	1	
	AN960-416	WASHER.	1	
	AN365-428	NUT	1	
		----*----		
- 4	95-160001-11	. RIB,LH.	1	1
	95-160001-12	. RIB,RH.	1	1
- 5	95-160000-3	. RIB,LH.	1	1
	95-160000-4	. RIB,RH.	1	1
- 6	35-165050-34	. BRACKET,LH.	1	1
	35-165050-35	. BRACKET,RH.	1	1
- 7	35-165050-64	. BRACKET,LH.	1	1
	35-165050-65	. BRACKET,RH.	1	1
- 8	50-160012-1	. RIB,LH.	1	1
	50-160012-2	. RIB,RH.	1	1
- 9	50-160013-1	. RIB,LH.	1	1
	50-160013-2	. RIB,RH.	1	1
- 10	35-165050-84	. RIB	1	1
- 11	35-165050-40	. BRACKET	1	1
- 12	35-165050-30	. BRACKET,LH.	1	1
	35-165050-31	. BRACKET,RH.	1	1
- 13	35-165050-62	. REINFORCEMENT	1	1
	35-165050-63	. REINFORCEMENT	1	1
- 14	45-361119-7	. CAM,FLAP LIMIT SWITCH /LH ONLY/	1	1
- 15	95-160000-5	. RIB,LH.	1	1
	95-160000-6	. RIB,RH.	1	1
- 16	95-160000-9	. RIB,LH.	1	1
	95-160000-10	. RIB,RH.	1	1
- 17	95-160000-13	. RIB,LH.	1	1
	95-160000-14	. RIB,RH.	1	1
- 18	95-160000-17	. RIB,LH.	1	1
	95-160000-18	. RIB,RH.	1	1
- 19	95-160000-25	. RIB,LH.	1	1
	95-160000-26	. RIB,RH.	1	1
- 20	95-160001-9	. SKIN,LH	1	1
	95-160001-10	. SKIN,RH	1	1
- 21	95-160001-5	. SKIN,LH	1	1
	95-160001-6	. SKIN,RH	1	1
- 22	95-160001-7	. SPAR,LH	1	1
	95-160001-8	. SPAR,RH	1	1
- 23	95-160001-3	. SKIN,LH BOTTOM.	1	1
	95-160001-4	. SKIN,RH BOTTOM.	1	1
- 24		. DELETED		
- 25	95-160000-31	. RIB,RH.	1	1
- 26	95-160000-35	. DOUBLER,RH.	1	1
- 27	103637	. PLACARD	1	1
		/ATTACHING PARTS/		
	49384	. FASTENER.	2	
		----*----		
- 28	6P6P	. WIRE,BONDING.	2	1
		/ATTACHING PARTS/		
	AN526-632-7	. SCREW	1	
	AN960-6	. WASHER.	2	
	AN365-632	. NUT	1	
		----*----		
- 29	95-160001-15	. RIB,LH.	1	1
	95-160001-16	. RIB,RH.	1	1
- 30	95-160001-13	. ANGLE	1	1
- 31	95-160000-21	. RIB /RH ONLY/	1	1

FIG. & INDEX NO.	PART NO.	1 2 3 4 5 6 7 DESCRIPTION	UNITS PER ASSY	USABLE ON CODE
22A- 32	35-165004	ROLLER ASSY,FLAP FWD.	2	1
- 33	BC22062	ROLLER ASSY,FLAP AFT.	2	1

CODE EFFECTIVITY

1 TD-453 AND AFTER

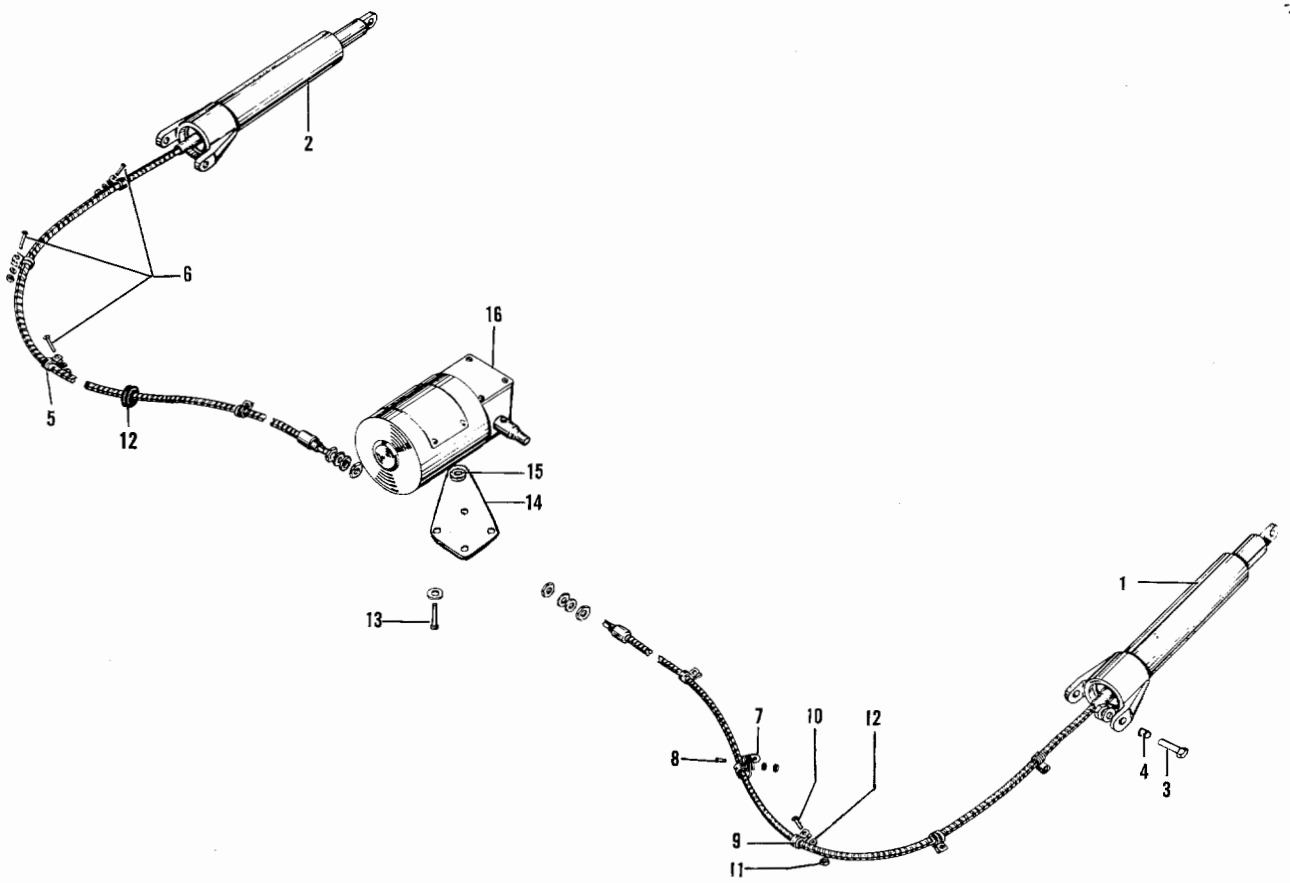

Figure 23. Wing Flap Control System

FIG. & INDEX NO.	PART NO.	DESCRIPTION 1 2 3 4 5 6 7	UNITS PER ASSY	USABLE ON CODE
		CONTROL INSTL,WING FLAP		
23 - 1	45-521212-14	. ACTUATOR ASSY,FLAP LH /SEE FIG. 24/	1	
- 2	45-521212-15	. ACTUATOR ASSY,FLAP RH /SEE FIG. 24/	1	
		/ATTACHING PARTS/		
- 3	AN4-5A	. BOLT.	2	
- 4	105739SYH0230	. BUSHING	2	
	AN960-416L	. WASHER.	2	
	AN364-428	. NUT	2	
		----*----		
- 5	AN742D9C	. CLAMP	4	
		/ATTACHING PARTS/		
- 6	AN520-10-8	. SCREW	1	
	AN960-10L	. WASHER.	1	
	AN365-1032	. NUT	1	
		----*----		
- 7	AN743-6	. CLIP.	1	
		/ATTACHING PARTS/		
- 8	AN520-8-8	. SCREW	1	
	AN365-832	. NUT	1	
		----*----		
- 9	AN742D9C	. CLAMP	1	
		/ATTACHING PARTS/		
- 10	AN520-10-10	. SCREW	1	
	AN960-10L	. WASHER.	1	
	AN365-1032	. NUT	1	
		----*----		

FIG. & INDEX NO.	PART NO.	DESCRIPTION 1 2 3 4 5 6 7	UNITS PER ASSY	USABLE ON CODE
23 - 11	AN3066-4	NUT	4	
- 12	AN960-1016L	WASHER	4	
	35-810132	SUPPORT ASSY,LANDING GEAR ACTUATOR /ATTACHING PARTS/	1	
- 13	AN73A3	BOLT	4	
	AN960-10L	WASHER	4	
		----*----		
- 14	35-810132-2	SUPPORT,LANDING GEAR ACTUATOR UPPER	1	
- 15	35-810133	BUSHING,LANDING GEAR ACTUATOR UPPER	1	
- 16	45-364193	MOTOR ASSY,FLAP /SEE FIG. 25/	1	1
	35-364151-57	MOTOR ASSY,FLAP /SEE FIG. 25A/	1	2

CODE	EFFECTIVITY	CODE	EFFECTIVITY
1	TD-1 THRU TD-327	2	TD-328 AND AFTER

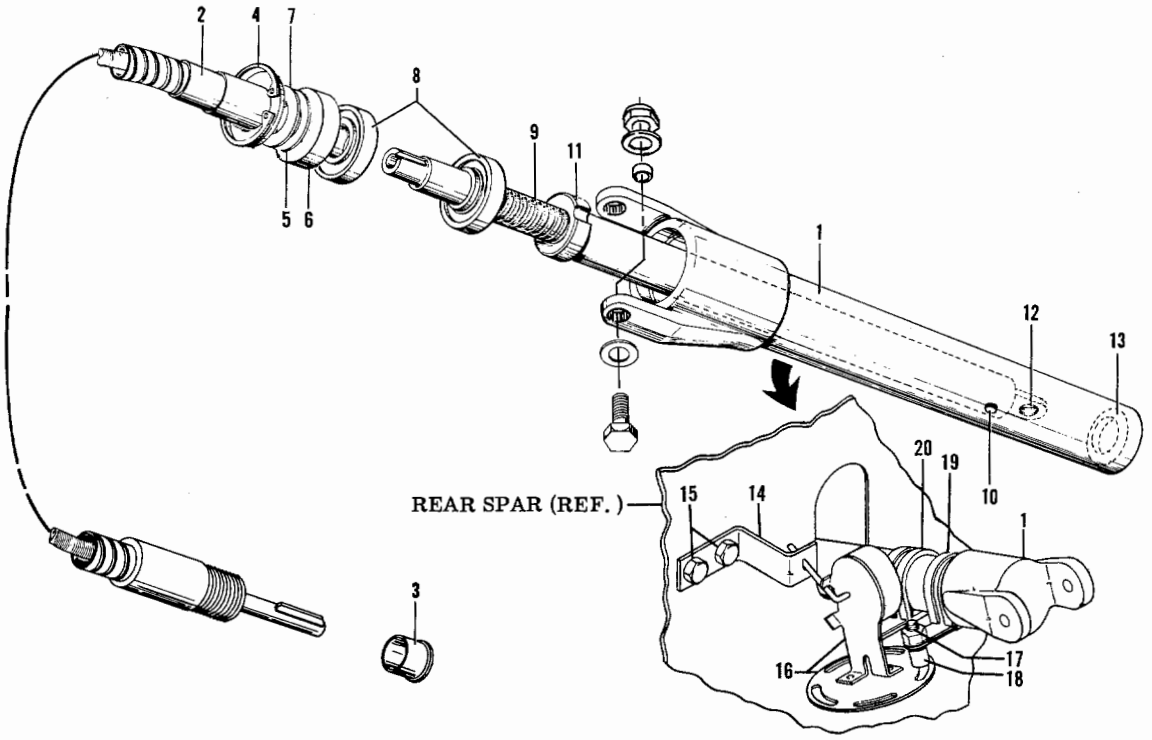

Figure 24. Flap Actuator

FIG. & INDEX NO.	PART NO.	DESCRIPTION 1 2 3 4 5 6 7	UNITS PER ASSY	USABLE ON CODE
24 -	¤45-521212-604	ACTUATOR ASSY,FLAP LH	1	
	45-521212	ACTUATOR ASSY,FLAP LH /SEE FIG. 23 FOR NHA/ . .	NP	
	¤45-521212-605	ACTUATOR ASSY,FLAP RH	1	
	45-521212-1	ACTUATOR ASSY,FLAP RH /SEE FIG. 23 FOR NHA/ . .	NP	
- 1	¤35-521213	. HOUSING,FLAP ACTUATOR	1	
- 2	¤3XSK8720-63-5/16	. SHAFT & CASING ASSY,FLAP ACTUATOR . . . . . /SUPERSEDES 45-521212-10/	1	
- 3	¤35-521229	. COLLAR /USED ONLY WITH 45-521212-10/.	1	
- 4	¤NAS50-112	. RING,RETAINING.	1	
- 5	¤35-521230-2	. SPACER.	1	
- 6	¤35-521230	. SPACER /TWO ADDITIONAL SPACERS MUST BE. . . . INCLUDED WHEN 11116M1 SEAL IS FURNISHED AS REPLACEMENT FOR 11216/	AR	
- 7	¤11116M1	. SEAL /SUPERSEDES 11216/	1	
- 8	¤S5S	. BEARING	2	
- 9	¤45-521216	. SCREW,FLAP ACTUATOR LH.	1	
	¤45-521216-1	. SCREW,FLAP ACTUATOR RH.	1	
	45-521212-4	. PISTON ASSY,FLAP ACTUATOR LH. . . . . /SUPERSEDES 45-521212-12/	1	
	¤45-521212-5	. PISTON ASSY,FLAP ACTUATOR RH. . . . . /SUPERSEDES 45-521212-13/	1	
- 10	¤45-521212-2	. . PIN	1	
- 11	¤45-521214	. . PISTON,LH	1	
	¤45-521214-1	. . PISTON,RH	1	
- 12	¤35-521215	. . PLUG.	1	
- 13	¤AN6227B13	. . SEAL.	1	

FIG. & INDEX NO.	PART NO.	DESCRIPTION 1 2 3 4 5 6 7	UNITS PER ASSY	USABLE ON CODE
24	35-160025-1	TRANSMITTER INSTL,FLAP INDICATOR.	NP	1
- 14	¤35-160025-3	. GUIDE,TRANSMITTER	1	1
		/ATTACHING PARTS/		
- 15	¤AN3-5A/M/	. BOLT.	2	
-	¤AN960-10	. WASHER.	2	
	¤MS20365-1032	. NUT	2	
		----*----		
- 16	¤35-160025-5	. TRANSMITTER,FLAP INDICATOR.	1	1
		/ATTACHING PARTS/		
- 17	¤AN3-10A/M/	. BOLT.	2	
- 18	¤102933D4ZJ0375	. SPACER.	2	
	¤AN960-10	. WASHER.	2	
	¤MS20365-1032	. NUT	2	
		----*----		
- 19	¤MS21919DG17	. CLAMP	1	1
- 20	35-160025-7	. CLAMP	1	1

CODE EFFECTIVITY

1 TD-668 AND AFTER

Blank Page

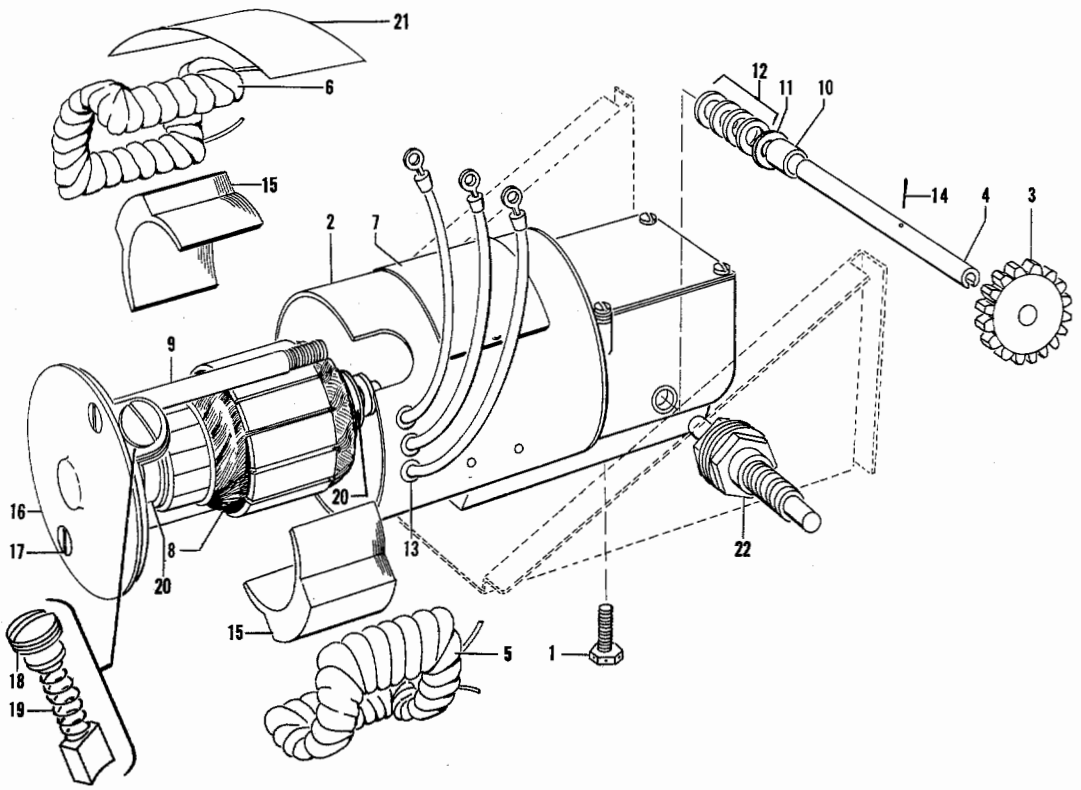

Figure 25. Flap Motor (TD-1 thru TD-327)

FIG. & INDEX NO.	PART NO.	DESCRIPTION 1 2 3 4 5 6 7	UNITS PER ASSY	USABLE ON CODE
25	45-364193	MOTOR ASSY,FLAP CONTROL /SEE FIG. 23 FOR NHA/ .	1	1
		/ATTACHING PARTS/		
- 1	AN73A3	BOLT.	4	
	AN960-10	WASHER.	4	
		----*----		
- 2	45-364193-1	. HOUSING,FLAP CONTROL MOTOR.	1	1
- 3	45-364193-3	. WHEEL,FLAP CONTROL MOTOR WORM	1	1
- 4	35-521227	. SHAFT,FLAP CONTROL MOTOR.	1	1
- 5	R901-327-24	. COIL,FIELD /24 VOLT/.	1	1
- 6	R901-327-22	. COIL,FIELD /24 VOLT/.	1	1
- 7	R901-311	. PLACARD	1	1
		/ATTACHING PARTS/		
	AN535-2-2	. DRIVE SCREW	2	
		----*----		
- 8	408-0293-233	. ARMATURE.	1	1
	449-0006	. LUG,BRUSH SOLDER.	1	1
	449-0003	. LUG,BRUSH SOLDER.	2	1
	31901	. TERMINAL.	2	1
	31903	. TERMINAL.	1	1
- 9	106242-3-00208	. TUBING.	2	1
- 10	100696S-ZY017	. SPACER.	1	1
- 11	AN960-616L	. WASHER.	1	1
- 12	105090B005-6E	. WASHER.	AR	1
- 13	AN240-3	. EYELET.	3	1
- 14	AN385-30-6	. PIN,TAPERED	1	1
- 15	560-0001	. POLE,FIELD.	2	1
- 16	35-364151-3	. HOUSING,BRUSH END /SUPERCEDES 589-0068-401/ .	1	1

FIG. & INDEX NO.	PART NO.	DESCRIPTION 1 2 3 4 5 6 7	UNITS PER ASSY	USABLE ON CODE
25 - 17	R812-3811-466	SCREW	2	1
- 18	35-364151-25	PLUG,BRUSH /SUPERCEDES 456-0010-006/	2	1
- 19	31-408	BRUSH ASSY,/SUPERCEDES SK-162/	2	1
- 20	R426-0041	BEARING	2	1
	ND77R4	BEARING	2	1
	R768-0004	WASHER	1	1
- 21	45-364193-5	INSULATOR,PHENOLIC	1	1
- 22	AN3066-4	NUT	4	1
	AN960-1016L	WASHER	4	1

CODE EFFECTIVITY

1 TD-1 THRU TD-327

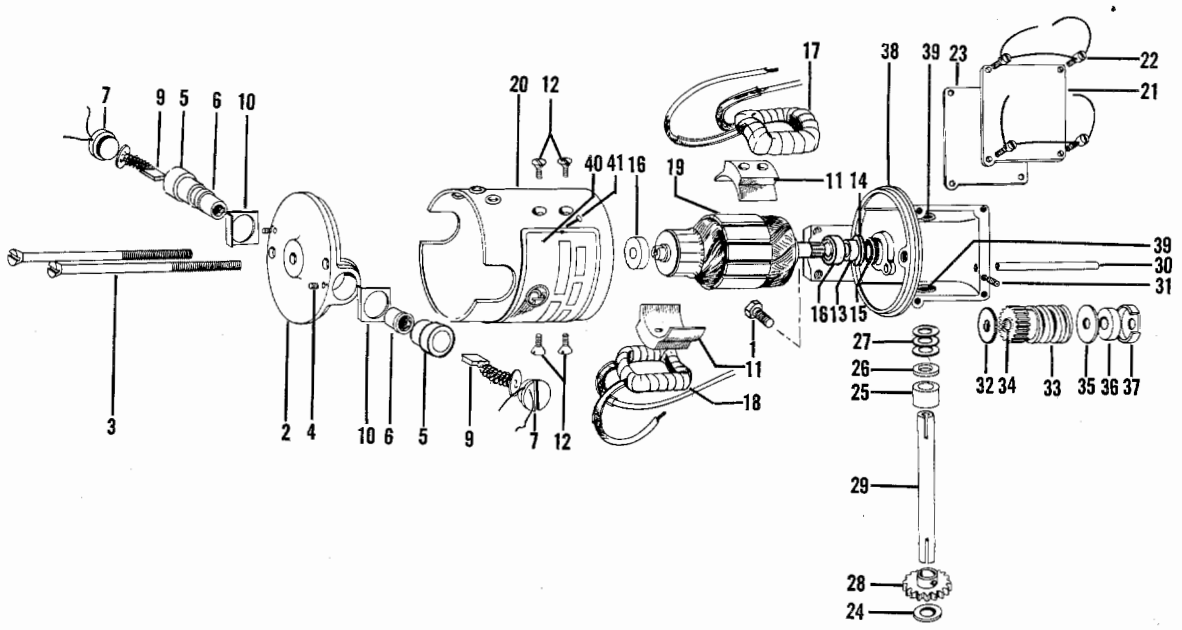

Figure 25A. Flap Motor (TD-328 & After)

FIG. & INDEX NO.	PART NO.	DESCRIPTION 1 2 3 4 5 6 7	UNITS PER ASSY	USABLE ON CODE
25A-	35-364151-57	MOTOR ASSY,FLAP /SEE FIG. 23 FOR NHA/ . . . . . /ATTACHING PARTS/	1	1
- 1	AN73A4	BOLT.	4	
	AN960-10L	WASHER.	4	
		----*----		
- 2	35-364151-3	. HOUSING,BRUSH . . . . . /ATTACHING PARTS/	1	1
- 3	AN505-832-46	. SCREW	2	
- 4	AN565D632H3	. SCREW,SET	2	
		----*----		
	35-364151-15	. HOLDER ASSY,BRUSH SLEEVE.	2	1
- 5	35-364151-11	. . HOLDER,BRUSH SLEEVE	2	1
- 6	35-364151-13	. . SLEEVE,BRUSH.	2	1
- 7	35-364151-25	. PLUG,BRUSH.	2	1
- 9	31-408	. BRUSH ASSY,FLAP MOTOR /SUPERCEDES SK-162/ . .	2	1
- 10	35-364151-41	. INSULATOR,BRUSH HOLDER.	2	1
- 11	35-364151-21	. POLE ASSY,FIELD . . . . . /ATTACHING PARTS/	2	1
- 12	AN505-632-5	. SCREW	2	
		----*----		

FIG. & INDEX NO.	PART NO.	DESCRIPTION 1 2 3 4 5 6 7	UNITS PER ASSY	USABLE ON CODE
25A- 13	35-364151-29	. COLLAR,OIL SEAL	1	1
- 14	35-364151-43	. WASHER,OIL SEAL	1	1
- 15	R768-0004	. WASHER,ARMATURE SHAFT RUBBER.	1	1
- 16	ND77R4	. BEARING,ARMATURE SHAFT.	2	1
- 17	R901-327-20	. COIL,FIELD.	1	1
- 18	R901-327-24	. COIL,FIELD.	1	1
- 19	408-0293-233	. ARMATURE,FLAP MOTOR	1	1
- 20	35-364151-1	. HOUSING,FLAP MOTOR.	1	1
- 21	35-364151-35	. COVER,GEAR HOUSING.	1	1
		/ATTACHING PARTS/		
- 22	AN500A632-4	. SCREW	4	
		----*----		
- 23	35-364151-33	. GASKET,GEAR HOUSING COVER	1	1
- 24	35-364151-45	. WASHER,WORM WHEEL THRUST.	1	1
- 25	100696SYZ017	. SPACER,GEAR SHAFT	1	1
- 26	AN960-616L	. WASHER,GEAR SHAFT	1	1
- 27	105090B005-6E	. WASHER,GEAR SHAFT SHIM.	4	1
	35-364151-51	. GEAR ASSY,FLAP MOTOR.	1	1
- 28	35-364151-9	. . GEAR,WORM WHEEL	1	1
- 29	35-521227	. . SHAFT,FLAP CONTROL MOTOR.	1	1
- 30	35-364151-31	. SHAFT,FLAP MOTOR COUNTER.	1	1
		/ATTACHING PARTS/		
- 31	AN565D632H4	. SCREW,SET	1	
		----*----		
- 32	35-364151-47	. WASHER,WORM	1	1
- 33	35-364151-17	. WORM & GEAR	1	1
- 34	B36	. BEARING,COUNTER SHAFT NEEDLE.	2	1
- 35	35-364151-49	. WASHER,COUNTER SHAFT THRUST	1	1
- 36	ND-R4A	. BEARING,COUNTER SHAFT	1	1
- 37	35-364151-23	. CUP,BEARING	1	1
	35-364151-7	. HOUSING ASSY,FLAP MOTOR GEAR.	1	1
- 38	35-364151-5	. . HOUSING,FLAP MOTOR GEAR	1	1
- 39	35-364151-27	. . BEARING,SLEEVE.	2	1
- 40	R901-311	. PLACARD,FLAP MOTOR IDENTIFICATION	1	1
		/ATTACHING PARTS/		
- 41	AN535-2-2	. SCREW,DRIVE	2	
		----*----		

CODE EFFECTIVITY

1 TD-328 AND AFTER

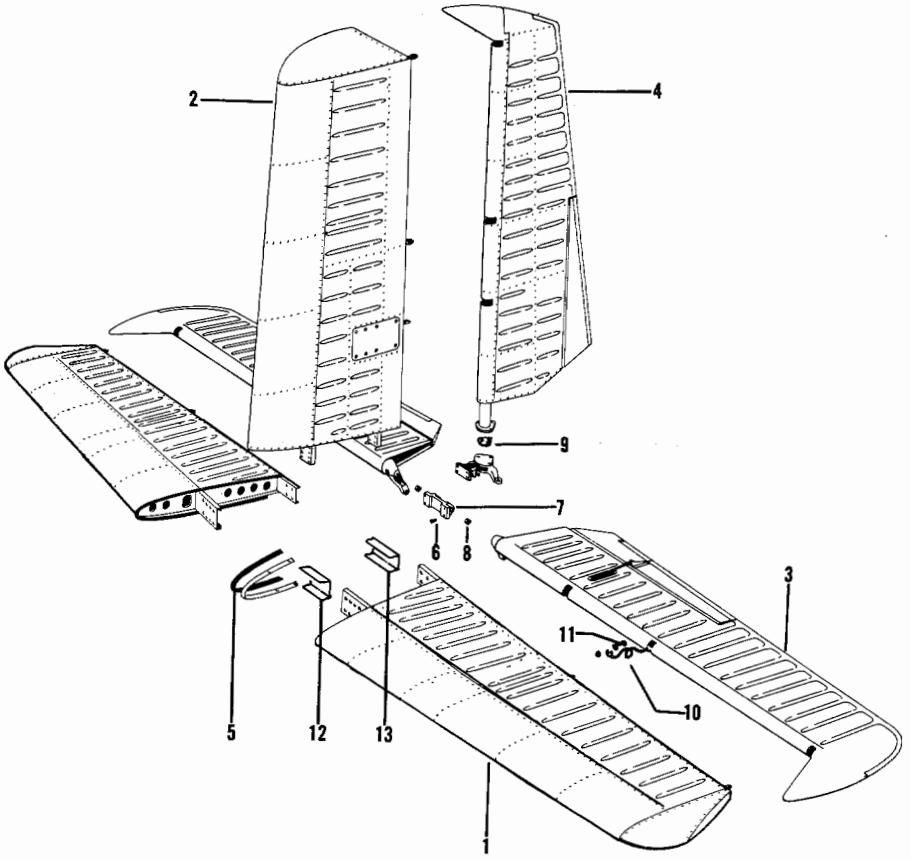

Figure 26. Empennage

FIG. & INDEX NO.	PART NO.	DESCRIPTION 1 2 3 4 5 6 7	UNITS PER ASSY	USABLE ON CODE
		EMPENNAGE INSTL		1
		EMPENNAGE INSTL		2
26 - 1		. STABILIZER ASSY,HORIZONTAL LH /SEE FIG. 27/ .		1
		. STABILIZER ASSY,HORIZONTAL LH /SEE FIG. 27/ .		2
		. STABILIZER ASSY,HORIZONTAL RH /SEE FIG. 27/ .		1
		. STABILIZER ASSY,HORIZONTAL RH /SEE FIG. 27/ .		2
- 2		. STABILIZER ASSY,VERTICAL /SEE FIG. 28/. . . .		1
		. STABILIZER ASSY,VERTICAL /SEE FIG. 28/. . . .		2
- 3		. ELEVATOR ASSY,LH /SEE FIG. 29/.		1
		. ELEVATOR ASSY,LH /SEE FIG. 29/.		2
		. ELEVATOR ASSY,RH /SEE FIG. 29/.		1
		. ELEVATOR ASSY,RH /SEE FIG. 29/.		2
- 4		. RUDDER ASSY /SEE FIG. 30/		
- 5	95-600000-3	. SEAL,LH /MAKE FR 115092-06200/.	1	1
	95-600000-4	. SEAL,RH /MAKE FR 115092-06200/.	1	1
	95-600001-3	. SEAL,HORIZONTAL STABILIZER LH	1	2
	95-600001-4	. SEAL,HORIZONTAL STABILIZER RH	1	2
	95-610011	. HINGE ASSY,ELEVATOR CENTER.	1	1
	95-610012-1	. HINGE ASSY,ELEVATOR CENTER.	1	2
		/ATTACHING PARTS/		
- 6	AN4-10A/M/	. BOLT.	4	3
	AN4-12A/M/	. BOLT.	4	4
	AN4-11/M/	. BOLT.	4	5
	MS20004-12/M/	. BOLT.	4	6
	AN960-416	. WASHER.	4	1
	AN960-416L	. WASHER.	4	5
	NAS143-4C	. WASHER.	4	6
	AN365-428	. NUT	4	

----*----

FIG. & INDEX NO.	PART NO.	DESCRIPTION 1 2 3 4 5 6 7	UNITS PER ASSY	USABLE ON CODE
26 - 7	95-610011-1	. . HINGE,ELEVATOR CENTER	1	1
	95-610012-5	. . HINGE,ELEVATOR CENTER	1	2
- 8	AN200KS4	. . BEARING,ACTUATOR.	2	
- 9	45-600011	. SHIM,RUDDER CONTROL ARM	AR	
- 10	AN749-1-4	. JUMPER,BONDING.	1	
		/ATTACHING PARTS/		
- 11	AN515-6R8	. SCREW	2	
	105090-032-1D	. WASHER.	2	
	AN365-632	. NUT	2	
		----*----		
	SD-3	. WICK,STATIC ELIMINATOR /SUPERCEDES AN/ASA-3/.	3	
- 12	95-440013-53	. SPAR,FWD.	1	2
- 13	95-440013-81	. SPAR,AFT.	1	2

CODE	EFFECTIVITY	CODE	EFFECTIVITY
1	TD-1 THRU TD-302	2	TD-303 AND AFTER
3	TD-1 THRU TD-102 AND TD-237 THRU TD-302	4	TD-103 THRU TD-236
5	TD-303 THRU TD-452	6	TD-453 AND AFTER

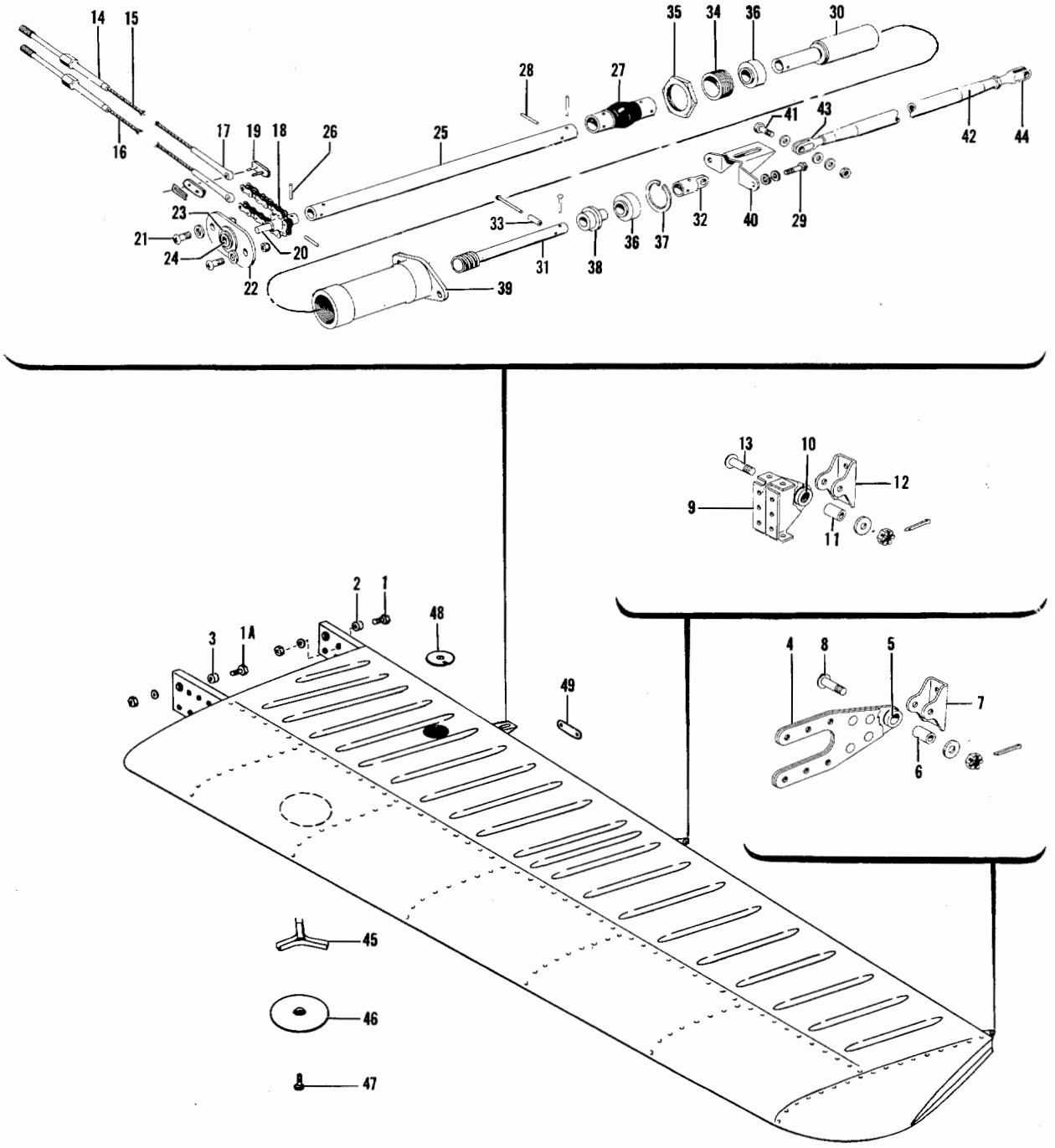

Figure 27. Horizontal Stabilizer

FIG. & INDEX NO.	PART NO.	DESCRIPTION 1 2 3 4 5 6 7	UNITS PER ASSY	USABLE ON CODE
27	95-620010-601	STABILIZER ASSY,HORIZONTAL LH	1	1
		/SPARE ASSY,SEE SECTION 4 FOR COMPONENTS/		
		STABILIZER ASSY,HORIZONTAL LH		1
		/SEE FIG. 26 FOR NHA/		
	95-620010-621	STABILIZER ASSY,HORIZONTAL LH	1	2
		/SPARE ASSY,SEE SECTION 4 FOR COMPONENTS/		
		STABILIZER ASSY,HORIZONTAL LH		2
		/SEE FIG. 26 FOR NHA/		
	95-620010-602	STABILIZER ASSY,HORIZONTAL RH	1	1
		/SPARE ASSY,SEE SECTION 4 FOR COMPONENTS/		
		STABILIZER ASSY,HORIZONTAL RH		1
		/SEE FIG. 26 FOR NHA/		
	95-620010-622	STABILIZER ASSY,HORIZONTAL RH	1	2
		/SPARE ASSY,SEE SECTION 4 FOR COMPONENTS/		
		STABILIZER ASSY,HORIZONTAL RH		2
		/SEE FIG. 26 FOR NHA/		
		/ATTACHING PARTS/		
- 1	AN4-6A/M/	BOLT.	2	3
	AN4-8A/M/	BOLT.	1	4
	AN4-7A/M/	BOLT.	1	4
	MS20004-6/M/	BOLT.	4	2
	AN525-1032	SCREW	4	2
- 1A	MS20004-6/M/	BOLT.	8	2
	AN960-416	WASHER.	6	
	NAS143-4C	WASHER.	10	
	AN960-416L	WASHER.	9	
	AN365-428	NUT	14	
		----*----		
- 2	45-620011-4	. BUSHING,WEAR.	6	
- 3	45-620011-12	. BUSHING,WEAR.	8	
	35-650121	. HINGE ASSY,ELEVATOR OUTBD	1	
	35-650121-4	. . HINGE ASSY,ELEVATOR OUTBD	1	
- 4	35-650121-2	. . . HINGE,HALF.	2	
- 5	B55	. . . BEARING	1	
- 6	35-600003	. . BUSHING,ELEVATOR HINGE.	1	
- 7	35-650121-6	. . BRACKET,ELEVATOR OUTBD HINGE.	1	
		/ATTACHING PARTS/		
- 8	AN23-14	. . BOLT.	1	
	AN960-10	. . WASHER.	1	
	AN320-3	. . NUT	1	
	AN380-2-2	. . PIN,COTTER.	1	
		----*----		
	95-620010-62	. HINGE ASSY,ELEVATOR CENTER.	1	
- 9	95-620010-60	. . HINGE,HALF.	2	
- 10	B55	. . BEARING	1	
- 11	35-600003	. BUSHING,ELEVATOR HINGE.	1	
- 12	35-650122-4	. BRACKET,ELEVATOR CENTER HINGE	1	
		/ATTACHING PARTS/		
- 13	AN23-14	. BOLT.	1	
	AN960-10	. WASHER.	1	
	AN380-2-2	. PIN,COTTER.	1	
	AN320-3	. NUT	1	
		----*----		
		. ACTUATOR INSTL,ELEVATOR TAB CONTROL LH. . . .		
		. ACTUATOR INSTL,ELEVATOR TAB CONTROL RH. . . .		
	45-526011	. . CHAIN & CABLE ASSY,ELEVATOR TRIM AFT. . . .	1	1
	45-526011-9	. . CHAIN & CABLE ASSY,ELEVATOR TRIM AFT. . . .	1	2
- 14	AN669S2L	. . . TERMINAL.	2	
	45-526011-1	. . . CABLE	1	1
- 15	45-526011-13	. . . CABLE	1	2
	45-526011-3	. . . CABLE	1	1
- 16	45-526011-11	. . . CABLE	1	2
- 17	NAS287-25-2	. . . TERMINAL.	2	
- 18	89	. . . CHAIN	1	
- 19	C4189	. . . LINK ASSY	2	
- 20	45-526005-3	. . SPROCKET,ELEVATOR TAB ACTUATOR.	1	

FIG. & INDEX NO.	PART NO.	DESCRIPTION 1 2 3 4 5 6 7	UNITS PER ASSY	USABLE ON CODE
27	45-526006-5	. . PLATE ASSY,TAB ACTUATOR TUBE SUPPORT. . . .	1	
		/ATTACHING PARTS/		
- 21	AN3-3A	. . BOLT.	2	
	AN960-10L	. . WASHER.	2	
		----*----		
- 22	45-526006-7	. . . PLATE	1	
- 23	45-526006-3	. . . BUSHING,TAB ACTUATOR.	1	
- 24	AN201KP3A	. . . BEARING,TAB ACTUATOR.	1	
- 25	45-526007-1	. . TUBE,TRIM TAB ACTUATOR ELEVATOR	1	
- 26	52-022-094-0437	. . PIN,ROLL.	2	
- 27	45-526015	. . JOINT,TRIM TAB ACTUATOR UNIVERSAL	1	
		/ATTACHING PARTS/		
- 28	52-022-094-0562	. . PIN,ROLL.	2	
		----*----		
	45-524565-3	. . ACTUATOR ASSY,ELEVATOR TRIM TAB LH.	1	
	45-524565-5	. . ACTUATOR ASSY,ELEVATOR TRIM TAB RH.	1	
		/ATTACHING PARTS/		
- 29	AN3-6A	. . BOLT.	2	
	AN960D10	. . WASHER.	4	
		----*----		
- 30	45-524557-1	. . . NUT ASSY,TRIM TAB ACTUATOR LH	1	
	45-524557-3	. . . NUT ASSY,TRIM TAB ACTUATOR RH	1	
- 31	45-524566-3	. . . SCREW,TRIM TAB ACTUATOR LH.	1	
	45-524566-5	. . . SCREW,TRIM TAB ACTUATOR RH.	1	
- 32	45-524563	. . . END,TAB ACTUATOR ROD.	1	
- 33	NAS42HT3-28	. . . SPACER.	1	
- 34	45-524569	. . . BUSHING,TAB ACTUATOR ADJUST	1	
	45-524626	. . . BUSHING,TRIM TAB ACTUATOR	1	
	AN6227-8	. . . RING,O.	1	
- 35	45-524564	. . . NUT,TAB ACTUATOR CHECK.	1	
- 36	AN201KP6A	. . . BEARING	2	
- 37	NAS50-87	. . . RING.	1	
- 38	45-524562	. . . BUSHING,TRIM TAB ACTUATOR	1	
- 39	45-524561-3	. . . HOUSING,TRIM TAB ACTUATOR	1	
- 40	45-526008	. . BRACKET,TRIM TAB TORQUE CONTROL	1	
	45-526009	. . TUBE ASSY,TRIM TAB ACTUATOR	1	
		/ATTACHING PARTS/		
- 41	AN173C5	. . BOLT.	1	
	AN960-10	. . WASHER.	2	
	AN310-3	. . NUT	1	
	AN380-2-2	. . PIN,COTTER.	1	
		----*----		
- 42	45-526009-1	. . . TUBE.	1	
- 43	45-135037	. . . END,ROD	1	
- 44	45-135038	. . END,TAB CONTROL ROD ADJUSTABLE.	1	
	AN315-3R	. . NUT,CHECK	1	
- 45	45-620021	. CLAMP ASSY,HOLE COVER ACCESS.	1	1
- 46	45-620020	. COVER,HOLE ACCESS	1	1
		/ATTACHING PARTS/		
- 47	AN507-832-8	. SCREW	1	
		----*----		
	95-110014-253	. DOOR ACCESS	2	2
		/ATTACHING PARTS/		
	AN509-8R	. SCREW	6	
		----*----		
- 48	AN6914-1024	. PLATE,PATCH	1	
- 49	103637	. PLACARD,IDENTIFICATION.	1	

CODE	EFFECTIVITY	CODE	EFFECTIVITY
1	TD-1 THRU TD-302	2	TD-303 AND AFTER
3	TD-1 THRU TD-102 AND TD-237 THRU TD-302	4	TD-103 THRU TD-236

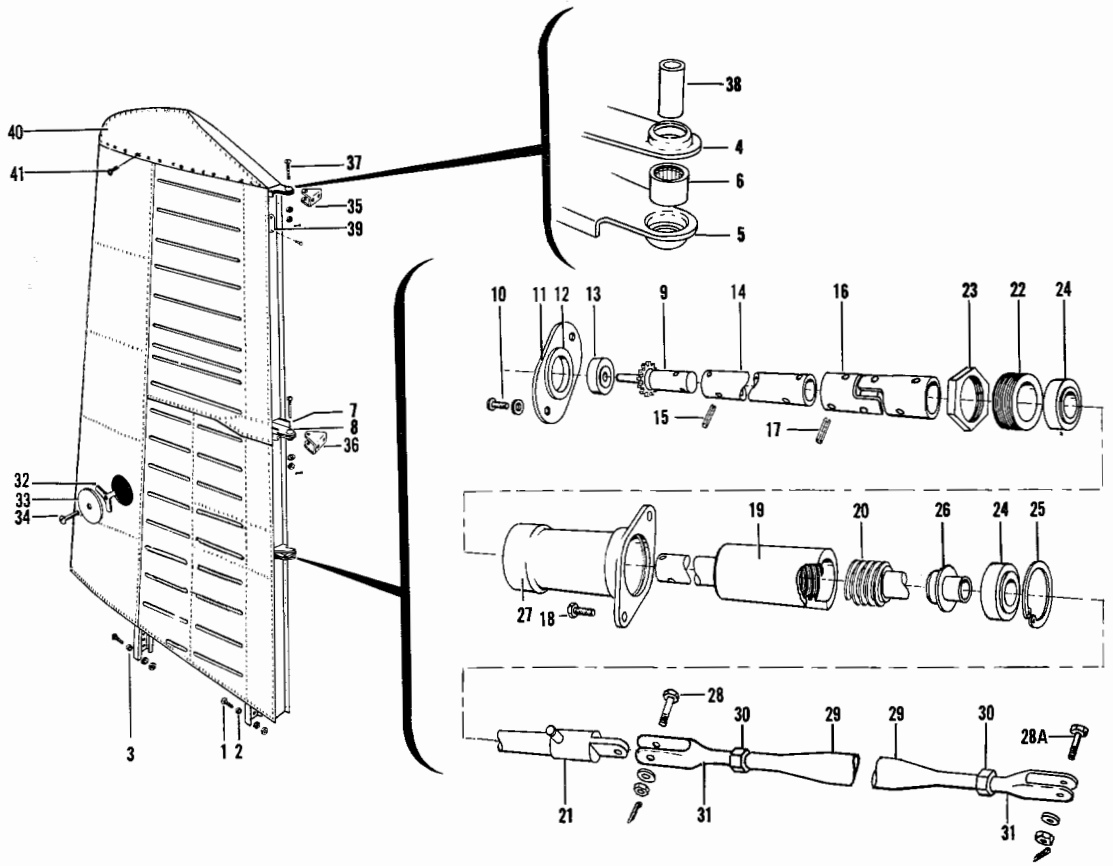

Figure 28. Vertical Stabilizer

FIG. & INDEX NO.	PART NO.	DESCRIPTION 1 2 3 4 5 6 7	UNITS PER ASSY	USABLE ON CODE
28	95-640005-601	STABILIZER ASSY,VERTICAL.	1	1
		/SPARE ASSY,SEE SECTION 4 FOR COMPONENTS/		
		STABILIZER ASSY,VERTICAL /SEE FIG. 26 FOR NHA/.		1
	95-640006-601	STABILIZER ASSY,VERTICAL.	1	2
		/SPARE ASSY,SEE SECTION 4 FOR COMPONENTS/		
		STABILIZER ASSY,VERTICAL /SEE FIG. 26 FOR NHA/.		2
		/ATTACHING PARTS/		
- 1	AN4-6A/M/	BOLT.	12	
	AN960-416	WASHER.	12	
	AN960-416L	WASHER.	12	
	AN365-428	NUT	12	
		----*----		
- 2	45-620011-2	. BUSHING,WEAR.	4	
- 3	45-620011-4	. BUSHING,WEAR.	8	
	45-640005-45	. HINGE ASSY,RUDDER UPPER	1	
- 4	45-650005-41	. . HINGE,RUDDER UPPER HALF	1	
- 5	95-640005-47	. . HINGE,RUDDER UPPER HALF	1	
- 6	B55	. . BEARING	1	
	45-640005-47	. HINGE ASSY,RUDDER LOWER	1	
- 7	45-640005-39	. . HINGE,RUDDER CENTER HALF.	2	
- 8	B55	. . BEARING	1	
		. ACTUATOR INSTL,RUDDER TAB		
- 9	95-524022-1	. . SPROCKET,RUDDER TRIM TAB ACTUATOR	1	
	95-526011	. . SUPPORT ASSY,RUDDER TAB ACTUATOR.	1	
		/ATTACHING PARTS/		
- 10	AN3-3A	. . BOLT.	2	
	AN960-10L	. . WASHER.	2	
		----*----		

FIG. & INDEX NO.	PART NO.	DESCRIPTION 1 2 3 4 5 6 7	UNITS PER ASSY	USABLE ON CODE
28 - 11	95-526011-1	. . . PLATE,TUBE SUPPORT.	1	
- 12	95-526011-3	. . . BUSHING	1	
- 13	AN201KP3A	. . . BEARING	1	
- 14	95-526010-10	. . TUBE,RUDDER TRIM TAB ACTUATOR	1	
- 15	52-022-094-0437	. . PIN	2	
- 16	45-526015	. . JOINT,TRIM TAB ACTUATOR UNIVERSAL	1	
- 17	52-022-094-0562	. . PIN	4	
	95-520011-601	. . ACTUATOR ASSY,RUDDER TRIM TAB /SPARE ASSY,. SEE SECTION 4 FOR COMPONENTS/	1	
		. . ACTUATOR ASSY,RUDDER TRIM TAB . . . . . /ATTACHING PARTS/		
- 18	AN3-5A/M/	. . BOLT.	2	
	AN960-10	. . WASHER.	4	
		----*----		
- 19	95-524014	. . . NUT ASSY,TRIM TAB ACTUATOR.	1	
- 20	95-524013	. . . SCREW,TRIM TAB ACTUATOR	1	
- 21	45-524563	. . . END,TAB ACTUATOR ROD.	1	
- 22	45-524569	. . . BUSHING,TAB ACTUATOR ADJUST	1	
- 23	45-524564	. . . NUT,TAB ACTUATOR CHECK.	1	
- 24	AN201KP6A	. . . BEARING,TAB ACTUATOR.	2	
- 25	NAS50-87	. . . RING.	1	
- 26	95-524012	. . . BUSHING,TRIM TAB ACTUATOR	1	
- 27	45-524561-3	. . . HOUSING,TRIM TAB ACTUATOR	1	
	95-526010-8	. . TUBE ASSY,ACTUATOR ARM. . . . . /ATTACHING PARTS/	1	
- 28	95-526010-20	. . BOLT.	1	
- 28A	AN173C5	. . BOLT.	1	
	AN960-10L	. . WASHER.	1	
	AN960-10	. . WASHER.	1	
	AN320-3	. . NUT	1	
	AN310-3	. . NUT	1	
	AN380-2-2	. . PIN,COTTER.	2	
		----*----		
- 29	95-526010-14	. . . TUBE,ACTUATOR ARM	1	
- 30	AN315-3R	. . . NUT	2	
- 31	45-135038	. . . END,ROD	2	
- 32	45-620021	. CLAMP ASSY,HOLE COVER ACCESS.	1	
- 33	45-620020	. COVER,HOLE ACCESS . . . . . /ATTACHING PARTS/	1	
- 34	AN507-832-8	. SCREW	1	
		----*----		
- 35	45-640010	. BRACKET,RUDDER UPPER.	1	
- 36	45-640011	. BRACKET,RUDDER LOWER. . . . . /ATTACHING PARTS/	1	
- 37	AN23-14	. BOLT.	2	
- 38	35-600003	. BUSHING,RUDDER HINGE.	2	
	AN960-10	. WASHER.	2	
	AN320-3	. NUT	2	
	AN380-2-2	. PIN,COTTER.	2	
		----*----		
- 39	AN7510-1	. PLACARD,IDENTIFICATION.	1	
- 40	95-640006-13	. TIP,VERTICAL STABILIZER . . . . . /ATTACHING PARTS/	1	2
- 41	AN525-1032	. SCREW	18	
		----*----		

CODE	EFFECTIVITY	CODE	EFFECTIVITY
1	TD-1 THRU TD-302	2	TD-303 AND AFTER

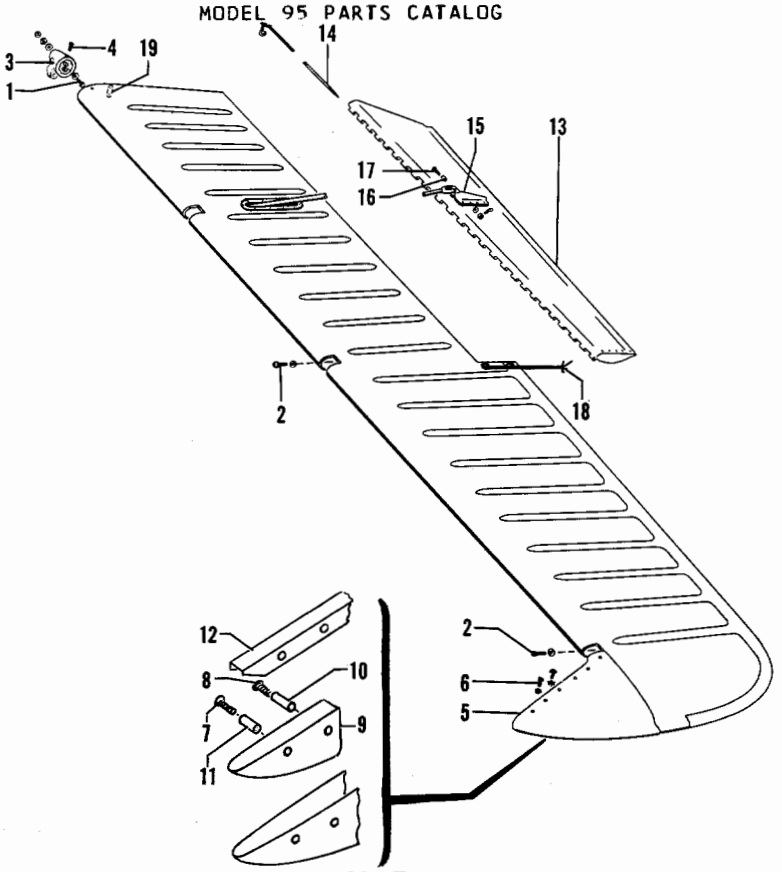

Figure 29. Elevator

FIG. & INDEX NO.	PART NO.	DESCRIPTION 1 2 3 4 5 6 7	UNITS PER ASSY	USABLE ON CODE
29 -	□95-610005-601	ELEVATOR ASSY,LH /SHORT/ /CORRUGATED/ . . . . . /COMPLETE/	1	1
	□95-610005-602	ELEVATOR ASSY,RH /SHORT/ /CORRUGATED/ . . . . . /COMPLETE/	1	1
	□95-610006-601	ELEVATOR ASSY,LH /LONG/ /CORRUGATED/. . . . . /COMPLETE/	1	2
	95-610006-661	ELEVATOR ASSY,LH /LONG/ /CORRUGATED/. . . . . /LESS TAB/	1	2
	□95-610006-602	ELEVATOR ASSY,RH /LONG/ /CORRUGATED/. . . . . /COMPLETE/	1	2
	95-610006-662	ELEVATOR ASSY,RH /LONG/ /CORRUGATED/. . . . . /LESS TAB/	1	2
	96-610005-601	ELEVATOR ASSY,LH /SMOOTH SKIN/ /COMPLETE/ . . .	1	3
	□96-610005-651	ELEVATOR ASSY,LH /SMOOTH SKIN/ /LESS TAB/ . . .	1	3
	96-610005-602	ELEVATOR ASSY,RH /SMOOTH SKIN/ /COMPLETE/ . . .	1	3
	□96-610005-652	ELEVATOR ASSY,RH /SMOOTH SKIN/ /LESS TAB/ . . . /ATTACHING PARTS/	1	3
- 1	□AN4-12A/M/	BOLT.	1	
- 2	□AN502-10-10	SCREW	4	
	□AN960-416	WASHER.	1	
	□AN960-416L	WASHER.	2	
	□AN960-10L	WASHER.	4	
	□MS20365-428	NUT /SUPERSEDES AN365-428/.	1	
		----*----		
	95-610006-11	. SHIM,ELEVATOR	1	2

FIG. & INDEX NO.	PART NO.	DESCRIPTION 1 2 3 4 5 6 7	UNITS PER ASSY	USABLE ON CODE
29 -	45-610005-2	. STRUCTURE ASSY,ELEVATOR LH.	1	
	45-610005-3	. STRUCTURE ASSY,ELEVATOR RH.	1	
- 3	¤95-610005-3	. . FITTING,ELEVATOR TORQUE LH.	1	
	¤95-610005-4	. . FITTING,ELEVATOR TORQUE RH.	1	
		/ATTACHING PARTS/		
- 4	AN23-9A/M/	. . BOLT.	4	
	¤AN960-10	. . WASHER.	4	
	¤MS20365-1032	. . NUT /SUPERSEDES AN365-1032/	4	
		----*----		
- 5	¤45-660012-1	. . SKIN,ELEVATOR HORN.	1	
		/ATTACHING PARTS/		
- 6	¤AN507-832R7	. . SCREW	14	
	¤AN960D8	. . WASHER.	2	
	¤112105	. . WASHER.	4	
	22A3-82	. . NUT	2	
		----*----		
	45-660013	. . WEIGHT ASSY,ELEVATOR BALANCE.	1	
	95-610006-43	. . WEIGHT ASSY,ELEVATOR BALANCE.	1	3
		/ATTACHING PARTS/		
- 7	¤AN507-832R7	. . SCREW	1	
- 8	¤AN507-832R10	. . SCREW	1	
	AN936D8	. . WASHER.	2	
		----*----		
- 9	45-660013-2	. . . WEIGHT,ELEVATOR BALANCE	1	4
	95-610006-45	. . . WEIGHT,ELEVATOR BALANCE	1	3
- 10	¤45-630012-6	. . . INSERT,BALANCE WEIGHT	1	
- 11	¤45-630012-8	. . . INSERT,BALANCE WEIGHT	1	
- 12	45-660011	. . RIB ASSY,ELEVATOR HORN CLOSURE.	1	
- 13	45-610005-110	. TAB ASSY,ELEVATOR TRIM LH	1	
		/SUPERSEDES 45-610005-603/		
	45-610005-111	. TAB ASSY,ELEVATOR TRIM RH	1	
		/SUPERSEDES 45-610005-604/		
		/ATTACHING PARTS/		
- 14	¤45-660041	. PIN,ELEVATOR TRIM HINGE	1	1
	95-610006-27	. PIN,ELEVATOR TRIM HINGE	1	5
		----*----		
- 15	¤45-610005-40	. . HORN,ELEVATOR TRIM TAB.	1	
- 16	¤105740X-ZH0115	. . BUSHING	1	
- 17	¤AN173C5/M/	. BOLT,ELEVATOR TRIM TAB ACTUATOR	1	
	¤AN960-10	. WASHER.	2	
	¤AN310-3	. NUT	1	
	¤MS24665-132	. PIN,COTTER /SUPERSEDES AN380-2-2/	1	
- 18	¤35-5010-1	. DISCHARGER,STATIC /SUPERSEDES AN/ASA-3,SD3. .	1	
		AND 35-5010/		
		/ATTACHING PARTS/		
	¤AN515-6R8	. SCREW	1	
	105090-032-1M	. WASHER.	2	
	¤MS20364-632	. NUT /SUPERSEDES AN364-632/.	1	
		----*----		
- 19	¤103637	. PLACARD,IDENTIFICATION.	1	

CODE	EFFECTIVITY	CODE	EFFECTIVITY
1	TD-1 THRU TD-302	2	TD-303 THRU TD-559
3	TD-560 AND AFTER	4	TD-1 THRU TD-559
5	TD-303 AND AFTER		

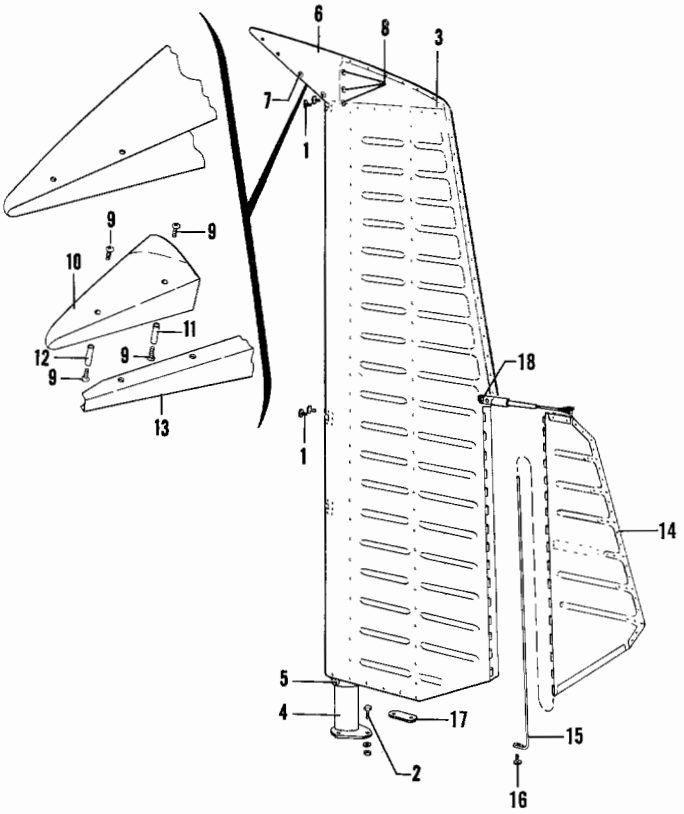

Figure 30. Rudder

FIG. & INDEX NO.	PART NO.	DESCRIPTION 1 2 3 4 5 6 7	UNITS PER ASSY	USABLE ON CODE
30	95-630005-601	RUDDER ASSY	1	
		/SPARE ASSY,SEE SECTION 4 FOR COMPONENTS/		
		RUDDER ASSY /SEE FIG. 26 FOR NHA/		
		/ATTACHING PARTS/		
- 1	AN502-10-10/M/	SCREW	4	
- 2	AN3-15A	BOLT.	3	
	100951X031VN	WASHER.	4	
	AN960-10	WASHER.	3	
	AN365-1032	NUT	3	
		----*----		
- 3	45-630005-102	. STRUCTURE ASSY,RUDDER	1	
- 4	45-630005-122	. . WELD ASSY,RUDDER TORQUE TUBE.	1	
		/ATTACHING PARTS/		
- 5	AN525-832-8	. . SCREW	4	
	AN960-8	. . WASHER.	4	
	AN365-832	. . NUT	4	
		----*----		
- 6	95-630005-7	. HORN ASSY,RUDDER.	1	
		/ATTACHING PARTS/		
- 7	AN507-832R7	. SCREW	4	
- 8	AN526-832R8	. SCREW	6	
	AN960-8L	. WASHER.	2	
	112105	. WASHER.	4	
	AN365-832	. NUT	2	
		----*----		

FIG. & INDEX NO.	PART NO.	DESCRIPTION 1 2 3 4 5 6 7	UNITS PER ASSY	USABLE ON CODE
30	45-630005-150	WEIGHT ASSY,RUDDER BALANCE	1	
		/ATTACHING PARTS/		
- 9	AN507-832R7	SCREW	4	
		----*----		
- 10	45-630005-152	WEIGHT,RUDDER BALANCE	1	
- 11	45-630012-2	INSERT,BALANCE WEIGHT	1	
- 12	45-630012-4	INSERT,BALANCE WEIGHT	1	
- 13	45-630005-52	RIB,RUDDER HORN	1	
	95-630005-602	TAB ASSY,RUDDER TRIM /SPARE ASSY/	1	
- 14	95-630005-1	TAB ASSY,RUDDER TRIM	1	
		/ATTACHING PARTS/		
- 15	45-630005-142	PIN,RUDDER TAB HINGE	1	
		----*----		
- 16	AN515-832R8	SCREW	1	
	AN960-8	WASHER	1	
- 17	103637	PLACARD,IDENTIFICATION	1	
		/ATTACHING PARTS/		
- 18	AN526-632R7	SCREW	2	
	105090-032-1D	WASHER	4	
	AN364-632	NUT	2	
		----*----		

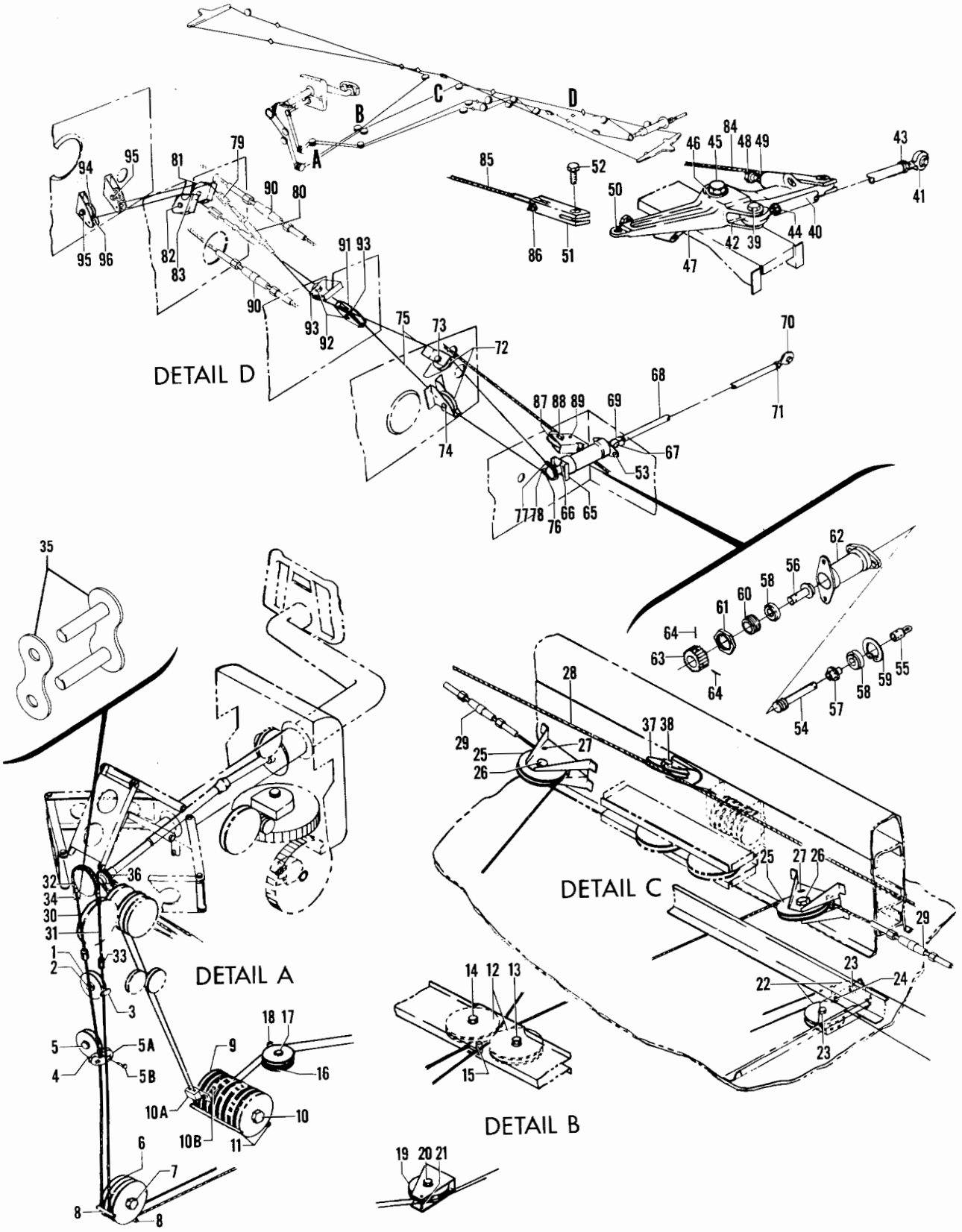

Figure 31. Aileron & Aileron Tab Flight Controls

FIG. & INDEX NO.	PART NO.	DESCRIPTION 1 2 3 4 5 6 7	UNITS PER ASSY	USABLE ON CODE
		CONTROLS INSTL,AILERON FUSELAGE FLIGHT.		
31 - 1	118540BHP3	. PULLEY /SUPERSEDES AN210-3B/.	1	1
	130000BEP3	. PULLEY.	1	2
		/ATTACHING PARTS/		
- 2	AN4-10A	. BOLT.	1	
	130001BB2	. BUSHING,PULLEY.	1	2
	AN960-416	. WASHER.	1	
	AN364-428	. NUT	1	
		----*----		
- 3	AN392-19	. PIN	1	
	AN380-2-2	. PIN,COTTER.	1	
- 4	118540BHP3	. PULLEY /SUPERSEDES AN210-3B/.	1	1
	130000BEP3	. PULLEY.	1	2
		/ATTACHING PARTS/		
- 5	AN4-10A	. BOLT.	1	
	130001BB2	. BUSHING,PULLEY.	1	2
	AN960-416	. WASHER.	1	
	AN364-428	. NUT	1	
		----*----		
- 5A	35-524309	. FAIRLEAD,AILERON CABLE GUARD.	1	
		/ATTACHING PARTS/		
- 5B	AN22-7A	. BOLT.	2	
	AN960-8	. WASHER.	4	
	AN364-836	. NUT	2	
		----*----		
- 6	118540BHP4	. PULLEY /SUPERSEDES AN210-4B/.	2	
		/ATTACHING PARTS/		
- 7	AN4-14A	. BOLT.	1	
	AN960-416	. WASHER.	1	
	AN365-428	. NUT	1	
		----*----		
- 8	AN392-35	. PIN	2	
	AN380-2-2	. PIN,COTTER.	2	
- 9	118540BHP4	. PULLEY /SUPERSEDES AN210-4B/.	2	3
		/ATTACHING PARTS/		
- 10	AN4-42A	. BOLT.	1	
	AN960-416	. WASHER.	1	
	AN365-428	. NUT	1	
		----*----		
- 10A	95-524000-43	. FAIRLEAD,AILERON TAB CABLE BEARING.	1	3
		/ATTACHING PARTS/		
- 10B	AN515-6	. SCREW	2	
	AN960-6	. WASHER.	2	
	AN960-10	. WASHER.	2	
	AN365-632	. NUT	2	
		----*----		
- 11	95-524000-21	. PIN,AILERON TAB CABLE STOP.	2	3
	AN380-2-2	. PIN,COTTER.	2	3
- 12	118540BHP4	. PULLEY /SUPERSEDES AN210-4B/.	2	
		/ATTACHING PARTS/		
- 13	AN4-10A	. BOLT.	1	
- 14	105077-10A	. BOLT.	1	
	AN960-416L	. WASHER.	2	
		----*----		
- 15	AN392-23	. PIN	1	
	AN380-2-2	. PIN,COTTER.	1	
- 16	118540BHP2	. PULLEY /SUPERSEDES AN210-2B/.	2	3
		/ATTACHING PARTS/		
- 17	AN3-12A	. BOLT.	1	
	AN960-10	. WASHER.	3	
	AN365-1032	. NUT	1	
		----*----		
- 18	AN392-27	. PIN	1	3
	AN380-2-2	. PIN,COTTER.	1	3
- 19	118540BHP2	. PULLEY /SUPERSEDES AN210-2B/.	2	3
		/ATTACHING PARTS/		
- 20	AN3-12A	. BOLT.	1	
	AN960-10	. WASHER.	3	
	AN365-1032	. NUT	1	
		----*----		
- 21	AN392-27	. PIN	1	3
	AN380-2-2	. PIN,COTTER.	1	3

FIG. & INDEX NO.	PART NO.	DESCRIPTION 1 2 3 4 5 6 7	UNITS PER ASSY	USABLE ON CODE
31 - 22	118540BHP2	. PULLEY /SUPERSEDES AN210-2B/.	2	3
		/ATTACHING PARTS/		
- 23	AN3-6A	. BOLT.	2	
	AN960-10	. WASHER.	4	
	AN365-1032	. NUT	2	
		----*----		
- 24	AN392-17	. PIN	2	3
	AN380-2-2	. PIN,COTTER.	2	3
- 25	118540BHP4	. PULLEY /SUPERSEDES AN210-4B/.	2	
		/ATTACHING PARTS/		
- 26	AN4-10A	. BOLT.	2	
	AN960-416	. WASHER.	2	
	AN365-428	. NUT	2	
		----*----		
- 27	AN392-23	. PIN	4	
	AN380-2-2	. PIN,COTTER.	4	
- 28	NAS305-55-1043	. CABLE ASSY,AILERON DOWN	1	
- 29	AN155-32L	. BARREL,TURNBUCKLE	4	
	95-524000-7	. CHAIN & CABLE ASSY,AILERON.	1	
- 30	95-524000-31	. . CABLE	1	
- 31	95-524000-33	. . CABLE	1	
- 32	35-524314-10	. . CHAIN	1	
- 33	AN966L4	. . TERMINAL,TURNBUCKLE	2	
- 34	35-524175	. . TERMINAL,TURNBUCKLE	2	
- 35	88	. . LINK.	2	
- 36	95-524000-11	. CHAIN & CABLE ASSY,AILERON TAB.	1	3
	95-524000-9	. . CABLE	1	3
	95-524000-35	. . CABLE	1	3
	95-524000-37	. . CHAIN	1	3
	AN669S2	. . TERMINAL.	2	3
	NAS287-25-2	. . TERMINAL.	2	3
	C4189	. . LINK.	2	3
- 37	118540BHP4	. PULLEY /SUPERSEDES AN210-4B/.	1	1
	130000BEP4	. PULLEY.	1	2
		/ATTACHING PARTS/		
- 38	AN4-10A	. BOLT.	1	1
	130001BB2	. BUSHING,PULLEY.	1	2
	AN960-416	. WASHER.	1	
	AN365-428	. NUT	1	
		----*----		
		. SYSTEM INSTL,RUDDER PEDAL /SEE FIG. 35/ . . .		
		CONTROL INSTL,WING FLIGHT LH.		3
		CONTROL INSTL,WING FLIGHT LH.		4
		CONTROL INSTL,WING FLIGHT RH.		
	35-521152	. ROD ASSY,AILERON CONTROL.	1	
		/ATTACHING PARTS/		
- 39	35-521187	. BOLT.	1	
	AN960-416L	. WASHER.	1	
	AN320-4	. NUT	1	
	AN380-2-2	. PIN,COTTER.	1	
		----*----		
- 40	35-521152-4	. . TUBE,CONTROL ROD.	1	
- 41	HM4	. . END,ROD	2	
- 42	HML4	. . END,ROD	2	
- 43	AN316-4L	. . NUT,CHECK	1	
- 44	AN316-4R	. . NUT,CHECK	1	
	95-521000-601	. BELLCRANK ASSY,AILERON LH	1	
		/SPARE ASSY,SEE SECTION 4 FOR COMPONENTS/		
		. BELLCRANK ASSY,AILERON LH		
	95-521000-602	. BELLCRANK ASSY,AILERON RH	1	
		/SPARE ASSY,SEE SECTION 4 FOR COMPONENTS/		
		. BELLCRANK ASSY,AILERON RH		
		/ATTACHING PARTS/		
- 45	AN4-17	. BOLT.	1	
	AN310-4	. NUT	1	
	AN960-416	. WASHER.	1	
	AN380-2	. PIN,COTTER.	1	
		----*----		

FIG. & INDEX NO.	PART NO.	DESCRIPTION 1 2 3 4 5 6 7	UNITS PER ASSY	USABLE ON CODE
31 - 46	AR4	. . BEARING	2	
- 47	35-521158-2	. . BELLCRANK,AILERON LH	1	
	35-521158-3	. . BELLCRANK,AILERON RH	1	
- 48	S185-111-003	. . BOLT	2	
- 49	AN316-5R	. . NUT,CHECK	2	
- 50	105740X-ZG0190	. . BUSHING	2	
- 51	35-521190	. FITTING,AILERON CONTROL CABLE	1	
		/ATTACHING PARTS/		
- 52	35-521186	. BOLT	1	
	AN960-10L	. WASHER	1	
	AN320-3	. NUT	1	
	AN380-2-2	. PIN,COTTER	1	
		----*----		
	45-524560	. ACTUATOR ASSY,AILERON TRIM TAB /LH ONLY/	1	3
		/ATTACHING PARTS/		
- 53	AN3-5A	. BOLT	2	
	AN960-10	. WASHER	2	
	AN365-1032	. NUT	2	
		----*----		
- 54	45-524566-1	. . SCREW,TRIM TAB ACTUATOR	1	3
- 55	45-524563	. . END,TAB ACTUATOR ROD	1	3
- 56	45-524557-1	. . NUT ASSY,TRIM TAB ACTUATOR	1	3
- 57	45-524562	. . BUSHING,TRIM TAB ACTUATOR	1	3
- 58	AN201KP6A	. . BEARING	2	3
- 59	NAS50-87	. . RING	1	3
- 60	45-524569	. . BUSHING,TAB ACTUATOR ADJUST	1	3
- 61	45-524564	. . NUT,TAB ACTUATOR CHECK	1	3
- 62	45-524561-1	. . HOUSING,TRIM TAB ACTUATOR	1	3
- 63	45-521100-3	. SPROCKET,AILERON TAB ACTUATOR /LH ONLY/	1	3
- 64	52-022-094-0437	. PIN /LH ONLY/	2	3
- 65	45-521011	. BRACKET ASSY,TAB ACTUATOR /LH ONLY/	1	3
		/ATTACHING PARTS/		
- 66	AN515-8R6	. SCREW	2	
		----*----		
	45-135034	. TUBE ASSY,AILERON TRIM TAB ACTUATOR	1	3
		/ATTACHING PARTS/		
- 67	NAS53-5	. BOLT	1	
	AN960-10L	. WASHER	1	
	AN310-3	. NUT	1	
	AN380-2-3	. PIN,COTTER	1	
		----*----		
- 68	45-135034-1	. . TUBE,AILERON TRIM TAB ACTUATOR	1	3
- 69	45-135037	. . END,ROD	1	3
- 70	45-135038	. . END,ROD	1	3
- 71	AN315-3R	. . NUT	1	3
- 72	118540BHP1	. PULLEY /SUPERSEDES AN210-1B/	2	3
		/ATTACHING PARTS/		
- 73	AN3-7A	. BOLT	1	
- 74	AN3-6A	. BOLT	1	
	AN960-10	. WASHER	1	
	AN960-10L	. WASHER	1	
	AN365-1032	. NUT	1	
		----*----		
	95-521000-33	. CHAIN & CABLE ASSY,TRIM TAB OUTBD /LH ONLY/	1	3
- 75	95-521000-35	. . CABLE,TRIM TAB	2	3
	45-524615-9	. . CHAIN,TRIM TAB	1	3
- 76	C4189	. . LINK ASSY	2	3
- 77	AN669S2RH	. . TERMINAL,TURNBUCKLE	2	3
- 78	NAS287-25-2	. . TERMINAL,CHAIN TO CABLE	2	3
- 79	45-524624	. STOP,TAB CABLE ADJUSTABLE	2	3
	AN320-5	. NUT	3	3
	AN960-516	. WASHER	4	3
	AN380-2-3	. PIN,COTTER	2	3

FIG. & INDEX NO.	PART NO.	DESCRIPTION 1 2 3 4 5 6 7	UNITS PER ASSY	USABLE ON CODE
31 - 80	AN155-8L	BARREL,TURNBUCKLE	2	3
- 81	118540BHP1	PULLEY,AILERON TAB CABLE/SUPERSEDES AN210-1B/	1	3
		/ATTACHING PARTS/		
- 82	AN3-6A	BOLT	1	
	AN960-10	WASHER	2	
	AN365-1032	NUT	1	
		----*----		
- 83	AN392-17	PIN,CABLE RETAINING	1	3
	AN380-2-2	PIN,COTTER	1	3
- 84	NAS305-34-0652	CABLE ASSY	1	
- 85	NAS305-35-0672	CABLE ASSY	1	
		/ATTACHING PARTS/		
- 86	AN24-12	BOLT	2	
	AN960-416L	WASHER	2	
	AN320-4	NUT	2	
	AN380-2-2	PIN,COTTER	2	
		----*----		
- 87	118540BHP3	PULLEY /SUPERSEDES AN210-3B/	1	3
		/ATTACHING PARTS/		
- 88	AN4-10A	BOLT	1	
	AN960-416	WASHER	1	
	AN365-428	NUT	1	
		----*----		
- 89	AN392-19	PIN,CABLE RETAINING	1	3
	AN380-2-2	PIN,COTTER	1	3
- 90	AN155-32L	BARREL,TURNBUCKLE	2	3
- 91	118540BHP1	PULLEY /SUPERSEDES AN210-1B/	1	3
		/ATTACHING PARTS/		
- 92	AN3-6A	BOLT	1	
	AN960-10	WASHER	2	
	AN960-10L	WASHER	1	
	AN365-1032	NUT	1	
		----*----		
- 93	AN392-17	PIN,CABLE RETAINING	1	3
	AN380-2-2	PIN,COTTER	1	3
- 94	118540BHP1	PULLEY /SUPERSEDES AN210-1B/	1	3
		/ATTACHING PARTS/		
- 95	AN3-6A	BOLT	1	
	AN960-10	WASHER	3	
	AN365-1032	NUT	1	
		----*----		
- 96	AN392-17	PIN	1	3
	AN380-2-2	PIN,COTTER	1	3
	95-521000-37	TAB,AILERON CABLE	1	3

CODE	EFFECTIVITY	CODE	EFFECTIVITY
1	TD-1 THRU TD-533	2	TD-534 AND AFTER
3	TD-1 THRU TD-452	4	TD-453 AND AFTER

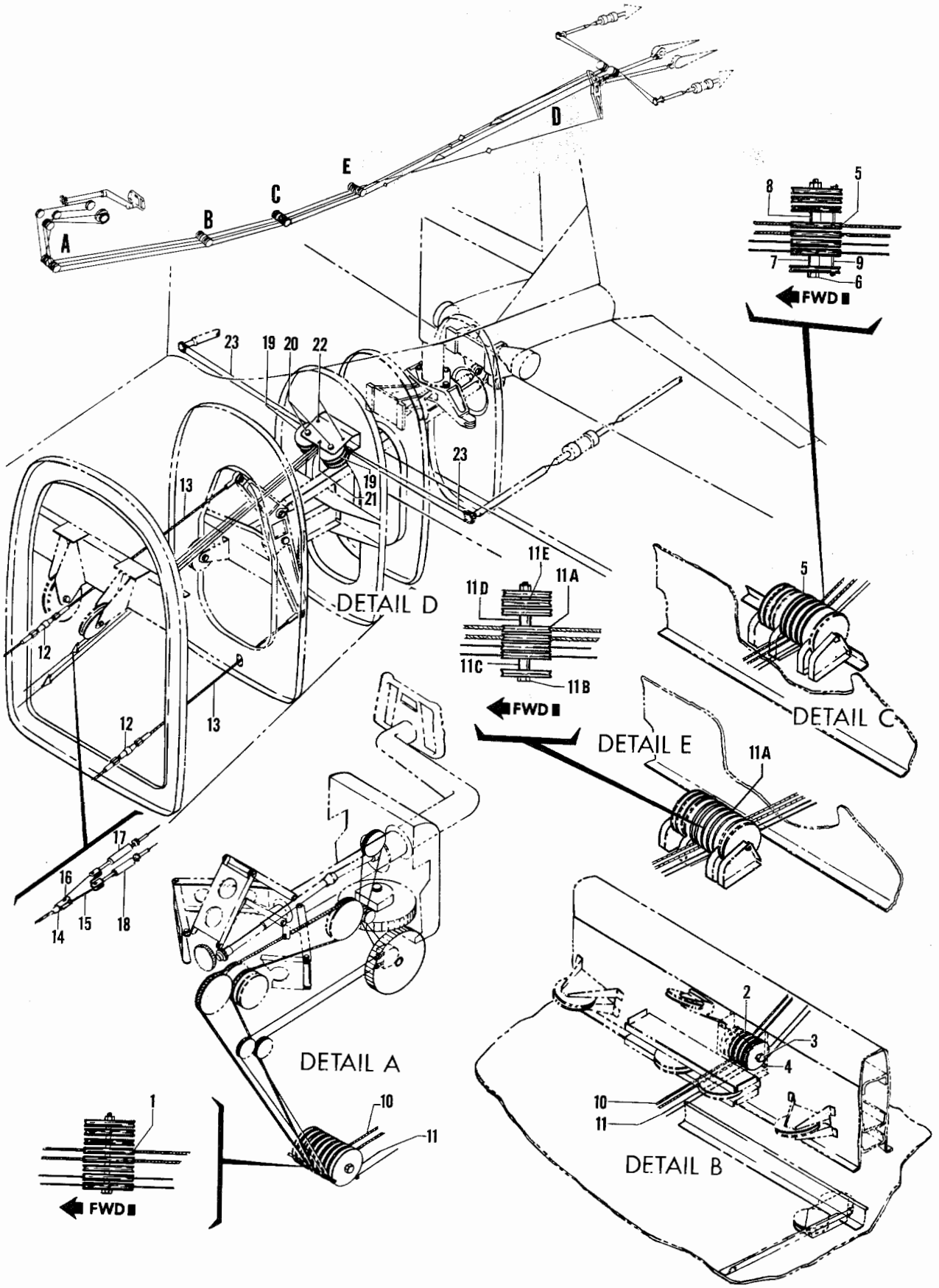

Figure 32. Elevator & Elevator Tab Flight Controls

FIG. & INDEX NO.	PART NO.	DESCRIPTION 1 2 3 4 5 6 7	UNITS PER ASSY	USABLE ON CODE
		CONTROL INSTL,ELEVATOR FUSELAGE FLIGHT.		
32 - 1	118540BHP4	. PULLEY /SUPERSEDES AN210-4B/.	8	
		/ATTACHING PARTS/		
	AN4-42A	. BOLT.	1	
	100801X6-0968	. BUSHING	1	
	AN960-416	. WASHER.	1	
	AN365-428	. NUT	1	
		----*----		
- 2	118540BHP3	. PULLEY /SUPERSEDES AN210-3B/.	6	1
	130000BEP3	. PULLEY.	6	2
		/ATTACHING PARTS/		
- 3	AN4-33A	. BOLT.	1	
	130001BB12	. BUSHING,PULLEY.	1	2
	AN960-416	. WASHER.	1	
	AN365-428	. NUT	1	
		----*----		
- 4	95-524000-19	. PIN,ELEVATOR CABLE STOP	1	
	AN380-2-2	. PIN,COTTER.	2	
	118540BHP4	. PULLEY /SUPERSEDES AN210-4B/.	8	3
- 5	118540BHP3	. PULLEY /SUPERSEDES AN210-3B/.	8	4
	130000BEP3	. PULLEY.	8	2
		/ATTACHING PARTS/		
- 6	AN4-54	. BOLT.	1	
	130001BB2	. BUSHING PULLEY.	4	2
	130001BB8	. BUSHING,PULLEY.	1	2
- 7	100801S6-0516	. BUSHING	1	1
	105739S-XU0516	. BUSHING	1	2
- 8	100801S6-0484	. BUSHING	1	1
	105739S-XU0484	. BUSHING	1	2
	AN960-416	. WASHER.	2	
	AN365-428	. NUT	1	
		----*----		
- 9	35-524003	. PIN,ELEVATOR CABLE STOP	1	
	AN380-2-2	. PIN,COTTER.	2	
- 10	95-524000-25	. CABLE ASSY,ELEVATOR CONTROL	2	
	MS20392-1-21	. PIN	1	
	AN380-2-2	. PIN,COTTER.	1	
- 11	95-524000-13	. CHAIN & CABLE ASSY,ELEVATOR TAB	1	
	95-524000-17	. . CABLE,ELEVATOR TAB.	1	
	95-524000-15	. . CABLE,ELEVATOR TAB.	1	
	95-524000-27	. . CHAIN,ELEVATOR TAB.	1	
	AN669S2	. . BARREL,TURNBUCKLE	2	
	NAS287-25-2	. . BARREL,TURNBUCKLE	2	
	C4189	. . LINK,CHAIN.	2	
- 11A	118540BHP4	. PULLEY,STA 170 /SUPERSEDES AN210-4B/.	8	4
	130000BEP3	. PULLEY,STA 170.	8	2
		/ATTACHING PARTS/		
- 11B	AN4-63	. BOLT.	1	
	130001BB2	. BUSHING,PULLEY.	4	2
	130001BB8	. BUSHING PULLEY.	1	2
- 11C	100801-56-0906	. BUSHING	1	1
	105739S-XU0906	. BUSHING	1	2
- 11D	100801-56-0516	. BUSHING	1	1
	105739S-XU0516	. BUSHING	1	2
- 11E	100801-56-0437	. BUSHING	1	1
	105739S-XU0437	. BUSHING	1	2
	AN960-416	. WASHER.	1	
	AN365-428	. NUT	1	
		----*----		
	95-524000-45	. PIN,STA 170 PULLEY GUARD.	1	4
		CONTROL INSTL,FUSELAGE REAR FLIGHT.		
- 12	AN155-32L	. BARREL,TURNBUCKLE	2	
- 13	NAS304-35-0564	. CABLE ASSY,ELEVATOR CONTROL	2	
		. CONTROL INSTL,REAR ELEVATOR /SEE FIG. 34/ . .		3
		. CONTROL INSTL,REAR ELEVATOR /SEE FIG. 34/ . .		4
- 14	AN665-10R	. TERMINAL,TURNBUCKLE	2	

FIG. & INDEX NO.	PART NO.	DESCRIPTION 1 2 3 4 5 6 7	UNITS PER ASSY	USABLE ON CODE
32 - 15	45-524572	LINK,ELEVATOR TRIM TAB CABLE /ATTACHING PARTS/	2	
- 16	AN23-9A	BOLT	6	
	AN960D10	WASHER	6	
	AN365D1032	SPACER	6	
		----*----		
- 17	AN155-8L	BARREL,TURNBUCKLE	2	
- 18	AN155-8S	BARREL,TURNBUCKLE	2	
- 19	118540BHP2	PULLEY /SUPERSEDES AN210-2B/ /ATTACHING PARTS/	4	
- 20	AN3-13A	BOLT	1	
	AN960-10	WASHER	1	
	NAS43C3-23	SPACER	1	
	AN365-1032	NUT	1	
		----*----		
- 21	MS20392-1-37	PIN,/SUPERCEDES AN392-37/	1	
- 22	AN392-43	PIN	2	
	AN380-2-2	PIN,COTTER	3	
- 23	45-526011	CABLE ASSY,ELEVATOR CONTROL	2	3
	45-526011-9	CABLE ASSY,ELEVATOR CONTROL	2	5

CODE	EFFECTIVITY	CODE	EFFECTIVITY
1	TD-1 THRU TD-533	2	TD-534 AND AFTER
3	TD-1 THRU TD-302	4	TD-303 THRU TD-533
5	TD-303 AND AFTER		

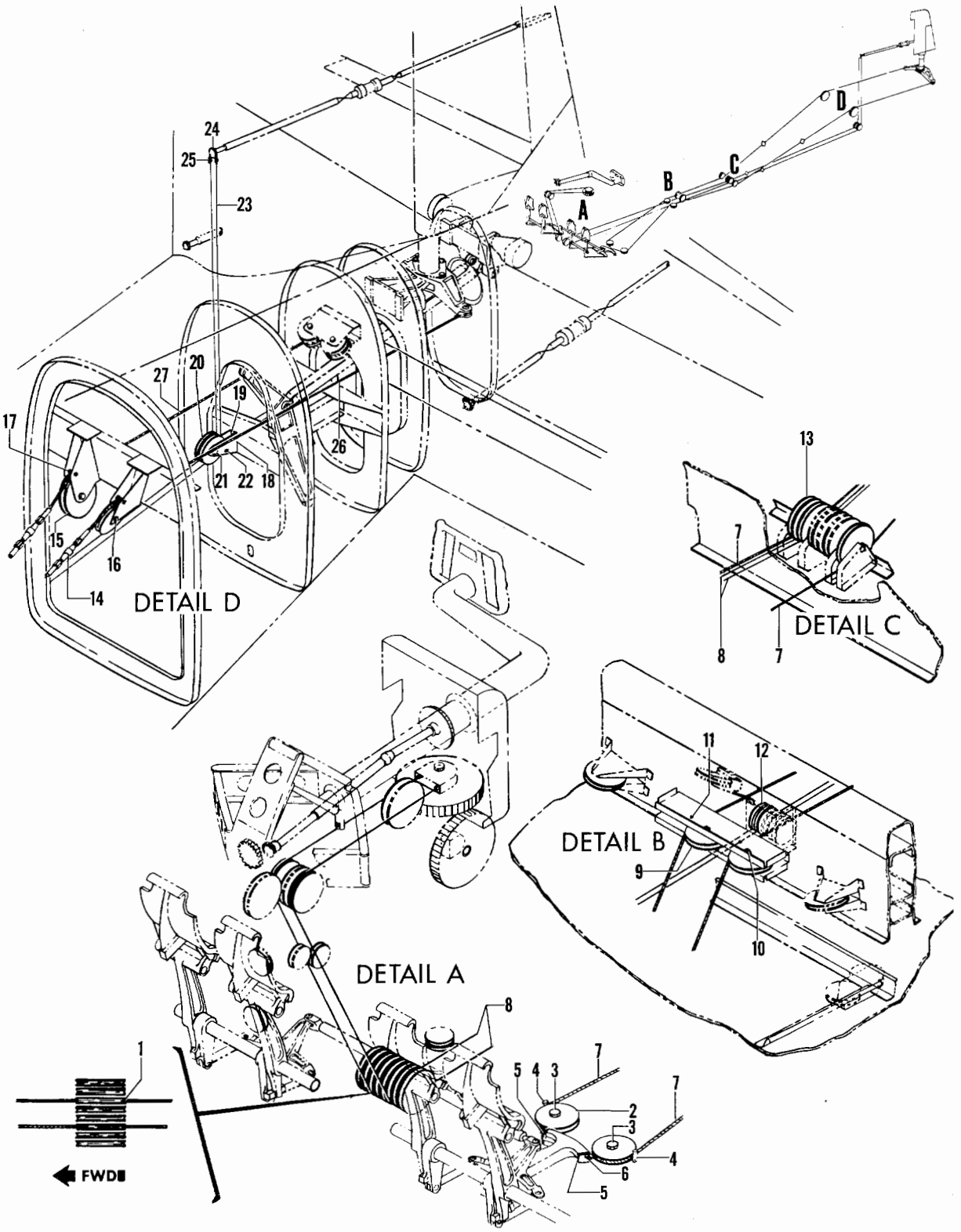

Figure 33. Rudder & Rudder Tab Flight Controls

FIG. & INDEX NO.	PART NO.	DESCRIPTION 1 2 3 4 5 6 7	UNITS PER ASSY	USABLE ON CODE
		CONTROL INSTL,RUDDER FUSELAGE FLIGHT.		
33 - 1	118540BHP4	. PULLEY /SUPERSEDES AN210-4B/.	2	
- 2	118540BHP4	. PULLEY /SUPERSEDES AN210-4B/.	2	1
	130000BEP4	. PULLEY.	2	2
		/ATTACHING PARTS/		
	105077-10A	. BOLT.	1	
- 3	AN4-10A	. BOLT.	1	
	130001BB2	. BUSHING,PULLEY.	2	2
	AN960-416	. WASHER.	2	
	AN365-428	. NUT	2	
		----*----		
- 4	AN392-23	. PIN	2	
	AN380-2-2	. PIN,COTTER.	2	
- 5	35-524321	. PLATE,RUDDER CONTROL.	2	
		/ATTACHING PARTS/		
- 6	AN502-10-10	. SCREW	2	
		----*----		
- 7	NAS314-14-1401	. CABLE ASSY,RUDDER CONTROL	2	
- 8	NAS302-77-3707	. CABLE ASSY,RUDDER TAB CONTROL	2	
- 9	118540BHP4	. PULLEY /SUPERSEDES AN210-4B/.	2	1
	130000BEP4	. PULLEY.	2	2
		/ATTACHING PARTS/		
- 10	AN4-10A	. BOLT.	2	
	130001BB2	. BUSHING,PULLEY.	2	2
	AN960-416	. WASHER.	2	
	AN365-428	. NUT	2	
		----*----		
- 11	AN392-23	. PIN	2	
	AN380-2-2	. PIN,COTTER.	2	
- 12	118540BHP3	. PULLEY /SUPERSEDES AN210-3B/.	2	1
	130000BEP3	. PULLEY.	2	2
	1300001BB12	. BUSHING PULLEY.	2	2
- 13	118540BHP4	. PULLEY /SUPERSEDES AN210-4B/.	2	3
	118540BHP3	. PULLEY /SUPERCEDES AN210-3B/.	2	4
	130000BEP3	. PULLEY.	2	2
	1300018B2	. BUSHING,PULLEY.	1	2
	130001BB6	. BUSHING,PULLEY.	1	2
	130001BB8	. BUSHING,PULLEY.	1	2
		REAR FUSELAGE FLIGHT CONTROL INSTL.		
- 14	AN155-32L	. BARREL,TURNBUCKLE	2	
- 15	118540BHP4	. PULLEY /SUPERSEDES AN210-4B/.	2	1
	130000BEP4	. PULLEY.	2	2
		/ATTACHING PARTS/		
- 16	AN4-10A	. BOLT.	1	
	130001BB2	. BUSHING,PULLEY.	2	2
	AN960-416	. WASHER.	1	
	AN365-428	. NUT	1	
		----*----		
- 17	NAS427K10	. PIN	2	
- 18	95-524001-1	. BRACKET,RUDDER PULLEY GUARD	1	
		/ATTACHING PARTS/		
- 19	AN526-832R6	. SCREW	1	
	AN960-8	. WASHER.	1	
	AN364-832	. NUT	1	
		----*----		
- 20	118540BHP2	. PULLEY /SUPERSEDES AN210-2B/.	2	
		/ATTACHING PARTS/		
- 21	AN3-11A	. BOLT.	1	
	AN960-10	. WASHER.	1	
	AN365-1032	. NUT	1	
		----*----		
- 22	NAS427K11	. PIN	1	
	95-524020	. CHAIN & CABLE ASSY,RUDDER TAB	1	
- 23	45-526011-3	. . CABLE,RUDDER TAB.	2	
- 24	95-524020-1	. . CHAIN,RUDDER TAB.	1	
- 25	C4189	. . LINK.	2	

FIG. & INDEX NO.	PART NO.	1 2 3 4 5 6 7 DESCRIPTION	UNITS PER ASSY	USABLE ON CODE
33 - 26	95-524001-9	• CABLE ASSY,RUDDER CONTROL LH• • • • • • • • • •	1	
- 27	95-524001-13	• CABLE ASSY,RUDDER CONTROL RH• • • • • • • • • •	1	3
	95-524001-15	• CABLE ASSY,RUDDER CONTROL RH• • • • • • • • • •	1	5

CODE	EFFECTIVITY	CODE	EFFECTIVITY
1	TD-1 THRU TD-533	2	TD-534 AND AFTER
3	TD-1 THRU TD-302	4	TD-303 THRU TD-533
5	TD-303 AND AFTER		

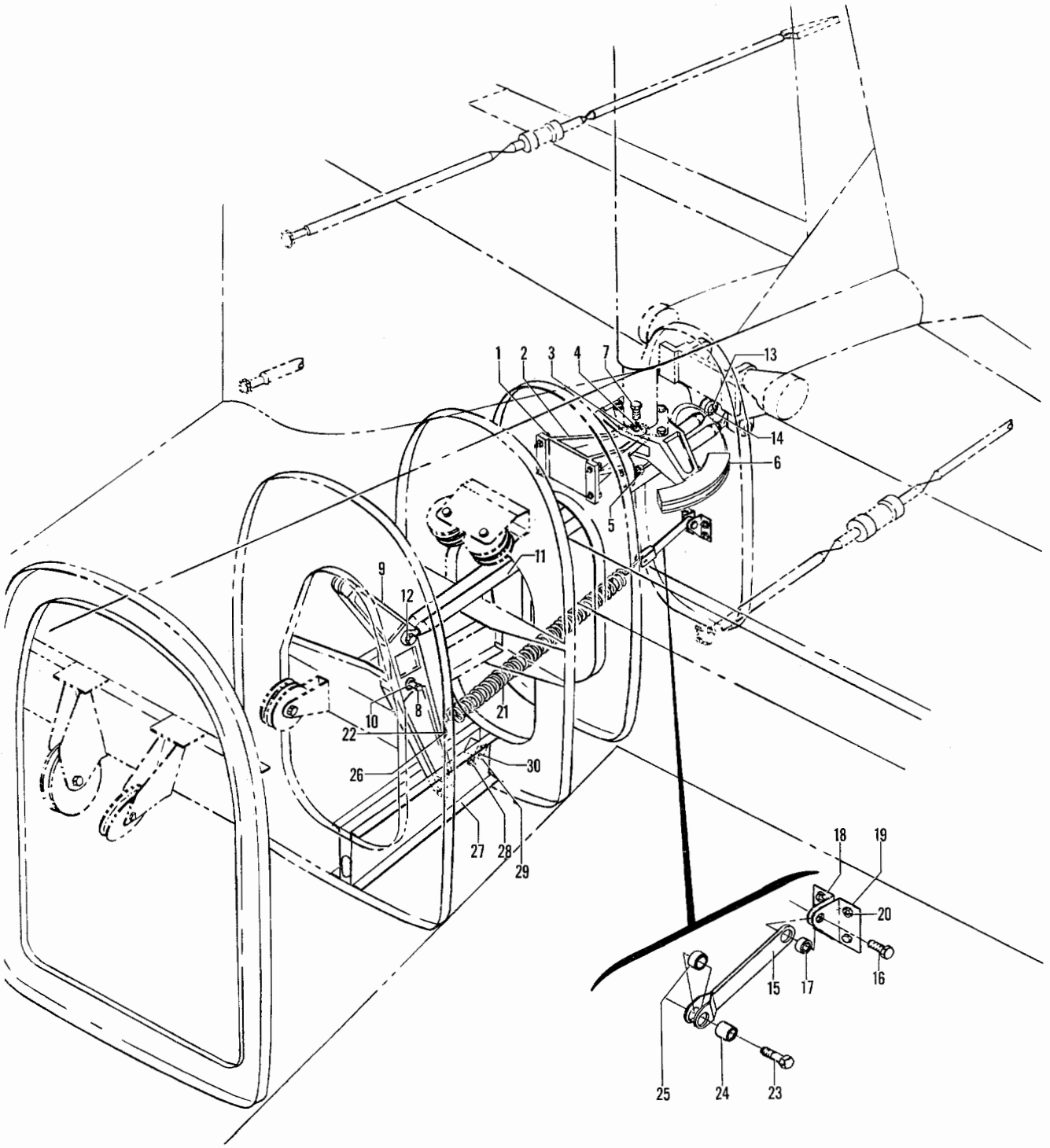

Figure 34. Aft Fuselage Flight Controls (Sht. 1 of 2 Shts.)

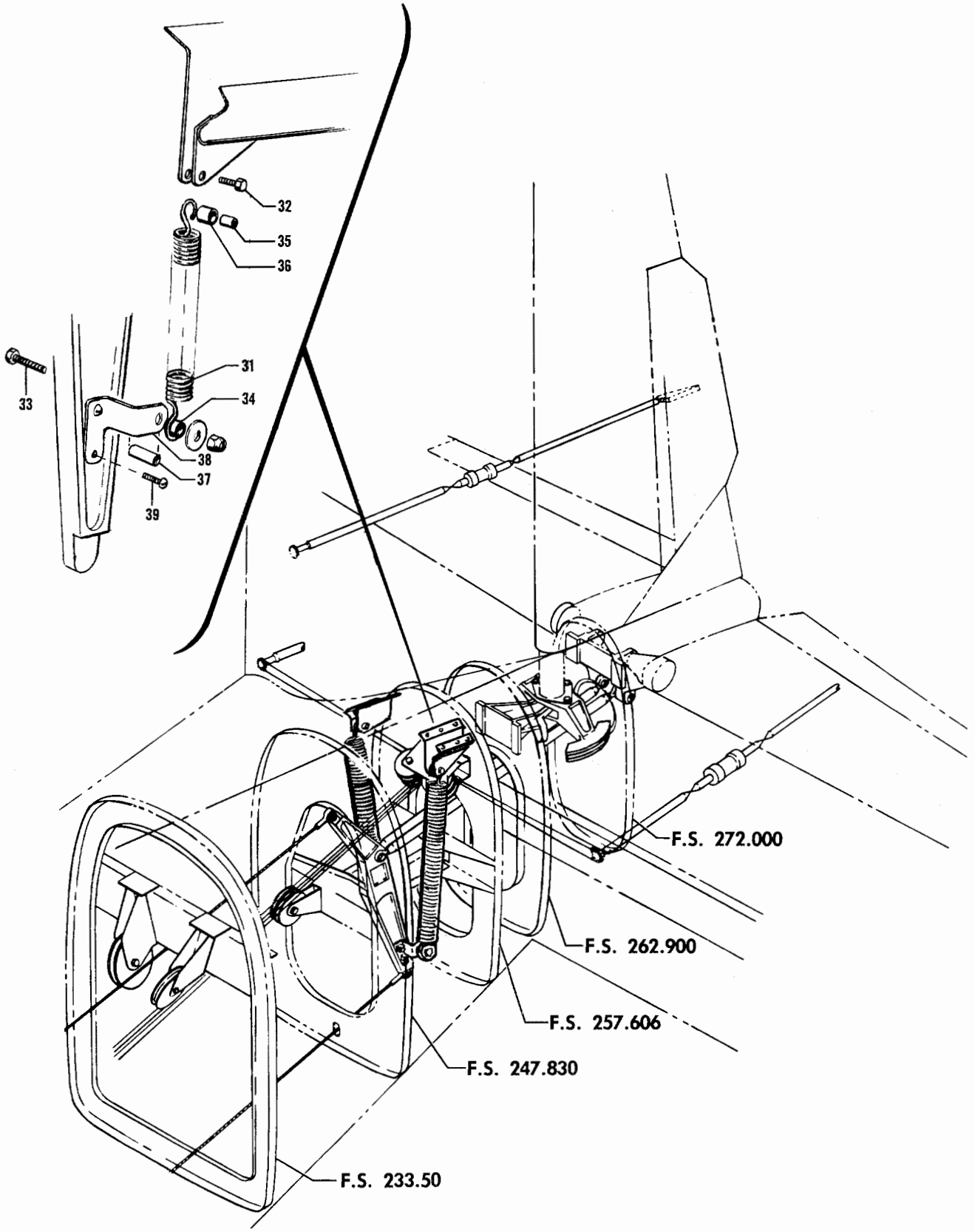

Figure 34. Aft Fuselage Flight Controls (Sht. 2 of 2 Shts.)

FIG. & INDEX NO.	PART NO.	DESCRIPTION 1 2 3 4 5 6 7	UNITS PER ASSY	USABLE ON CODE
		CONTROL INSTL,REAR FUSELAGE ELEVATOR.		1
		/SEE FIG. 32 FOR NHA/		
		CONTROL INSTL,REAR FUSELAGE ELEVATOR.		2
		/SEE FIG. 32 FOR NHA/		
34	45-524040-602	. HINGE ASSY,RUDDER LOWER /SPARE ASSY,.	1	1
		SEE SECTION 4 FOR COMPONENTS/		
		. HINGE ASSY,RUDDER LOWER		1
	95-524039	. HINGE ASSY,RUDDER LOWER	1	2
		/ATTACHING PARTS/		
- 1	AN4-7A/M/	. BOLT.	4	
	AN960-416L	. WASHER.	8	
	AN365-428	. NUT	4	
		----*----		
- 2	45-524040-2	. . HINGE,RUDDER LOWER.	1	1
	95-524039-1	. . HINGE,RUDDER LOWER.	1	2
- 3	AN200KP4	. . BEARING	1	
- 4	1191-4CNX.38	. . INSERT,HELICOIL	2	
- 5	NAS428H4-10	. BOLT,RUDDER BELLCRANK STOP.	2	
	AN316-4R	. NUT	2	
- 6	95-524035	. ARM ASSY,RUDDER CONTROL	1	
		/ATTACHING PARTS/		
- 7	AN174-15/M/	. BOLT.	1	
	AN960-416L	. WASHER.	2	
	AN310-4	. NUT	1	
	AN380-2-2	. PIN,COTTER.	1	
		----*----		
	95-524011	. BELLCRANK ASSY,ELEVATOR PUSH PULL	1	2
	95-524011-5	. BELLCRANK ASSY,ELEVATOR PUSH PULL	1	1
		/ATTACHING PARTS/		
- 8	AN24-24/M/	. BOLT.	1	
	AN960-416L	. WASHER.	2	
	AN310-4	. NUT	1	
	AN380-2-2	. PIN,COTTER.	1	
		----*----		
	95-524011-3	. . BELLCRANK,ELEVATOR PUSH PULL.	1	1
- 9	95-524011-1	. . BELLCRANK,ELEVATOR PUSH PULL.	1	2
- 10	AN201KP4A	. . BEARING	1	
- 11	95-524017-8	. TUBE,ELEVATOR PUSH PULL	1	
		/ATTACHING PARTS/		
- 12	AN6-25/M/	. BOLT.	1	
- 13	AN26-31/M/	. BOLT.	2	
	AN960-616	. WASHER.	3	
	AN960-616L	. WASHER.	3	
	AN310-6	. NUT	1	
	AN320-6	. NUT	2	
	AN380-2-3	. PIN,COTTER.	3	
		----*----		
- 14	HM6	. END,ROD	2	
	AN960-616	. WASHER.	2	
	AN316-6R	. NUT	2	
- 15	95-524017-22	. ARM ASSY,ELEVATOR CONTROL	1	1
		/ATTACHING PARTS/		
- 16	AN3-10A	. BOLT.	1	
- 17	105739X-ZM0093	. BUSHING,BEARING	1	
	AN960-10	. WASHER.	1	
	AN365-1032	. NUT	1	
		----*----		
- 18	95-524017-25	. CLIP,ELEVATOR CONTROL	1	1
- 19	95-524017-26	. CLIP,ELEVATOR CONTROL	1	1
		/ATTACHING PARTS/		
- 20	AN520R10	. SCREW	2	
	AN960-10	. WASHER.	2	
	AN365-1032	. NUT	2	
		----*----		

FIG. & INDEX NO.	PART NO.	DESCRIPTION 1 2 3 4 5 6 7	UNITS PER ASSY	USABLE ON CODE
34 - 21	95-524019	. SPRING,ELEVATOR DOWN.	1	1
		/ATTACHING PARTS/		
- 22	AN3-7	. BOLT.	1	
- 23	AN3-10A	. BOLT.	1	
- 24	105739X-ZM0187	. BUSHING,BEARING	1	
- 25	105739X-ZZ0156	. BUSHING,BEARING	1	
	AN960-10	. WASHER.	2	
	AN365-1032	. NUT	2	
- 26	105739X-XD0230	. BUSHING,BEARING	1	
		----*----		
	AN515-832	. SCREW,ELEVATOR RIG PIN HOLE FILLER.	1	3
	AN960-8	. WASHER ELEVATOR RIG PIN HOLE FILLER	1	3
	AN365-832	. NUT,ELEVATOR RIG PIN HOLE FILLER.	1	3
	95-524017-12	. BRACKET ASSY,ELEVATOR BELLCRANK	1	3
	95-524038-19	. BRACKET ASSY,ELEVATOR BELLCRANK	1	4
- 27	95-524017-18	. . BRACKET,ELEVATOR BELLCRANK.	1	3
	95-524038-17	. . BRACKET,ELEVATOR BELLCRANK.	1	4
- 28	NAS428H4-14	. . BOLT.	2	
	AN316-4R	. . NUT	2	
- 29	45-410087	. . BLOCK,ELEVATOR BELLCRANK.	2	
		/ATTACHING PARTS/		
- 30	AN515-832	. . SCREW	2	
	AN960-8	. . WASHER.	2	
	AN365-832	. . NUT	2	
		----*----		
- 31	95-524019	. SPRING,ELEVATOR DOWN.	2	2
		/ATTACHING PARTS/		
- 32	AN3-6A	. BOLT.	2	
- 33	AN3-35A	. BOLT.	1	
- 34	AN201KP3A	. BEARING	2	
- 35	105739X-ZD0250	. BUSHING,BEARING	2	
- 36	105739X-YE0218	. BUSHING,BEARING	2	
- 37	100696S-ZL102	. SPACER.	2	
	AN960-10	. WASHER.	2	
	100951X050ZM	. WASHER.	2	
	AN365-1032	. NUT	3	
		----*----		
- 38	95-524038-11	. BRACKET,DOWN SPRING LH.	1	2
	95-524038-12	. BRACKET,DOWN SPRING RH.	1	2
		/ATTACHING PARTS/		
- 39	AN520-10	. SCREW	1	
	AN960-10	. WASHER.	1	
	AN365-1032	. NUT	1	
		----*----		

CODE	EFFECTIVITY	CODE	EFFECTIVITY
1	TD-1 THRU TD-302	2	TD-303 AND AFTER
3	TD-303 THRU TD-351	4	TD-352 AND AFTER

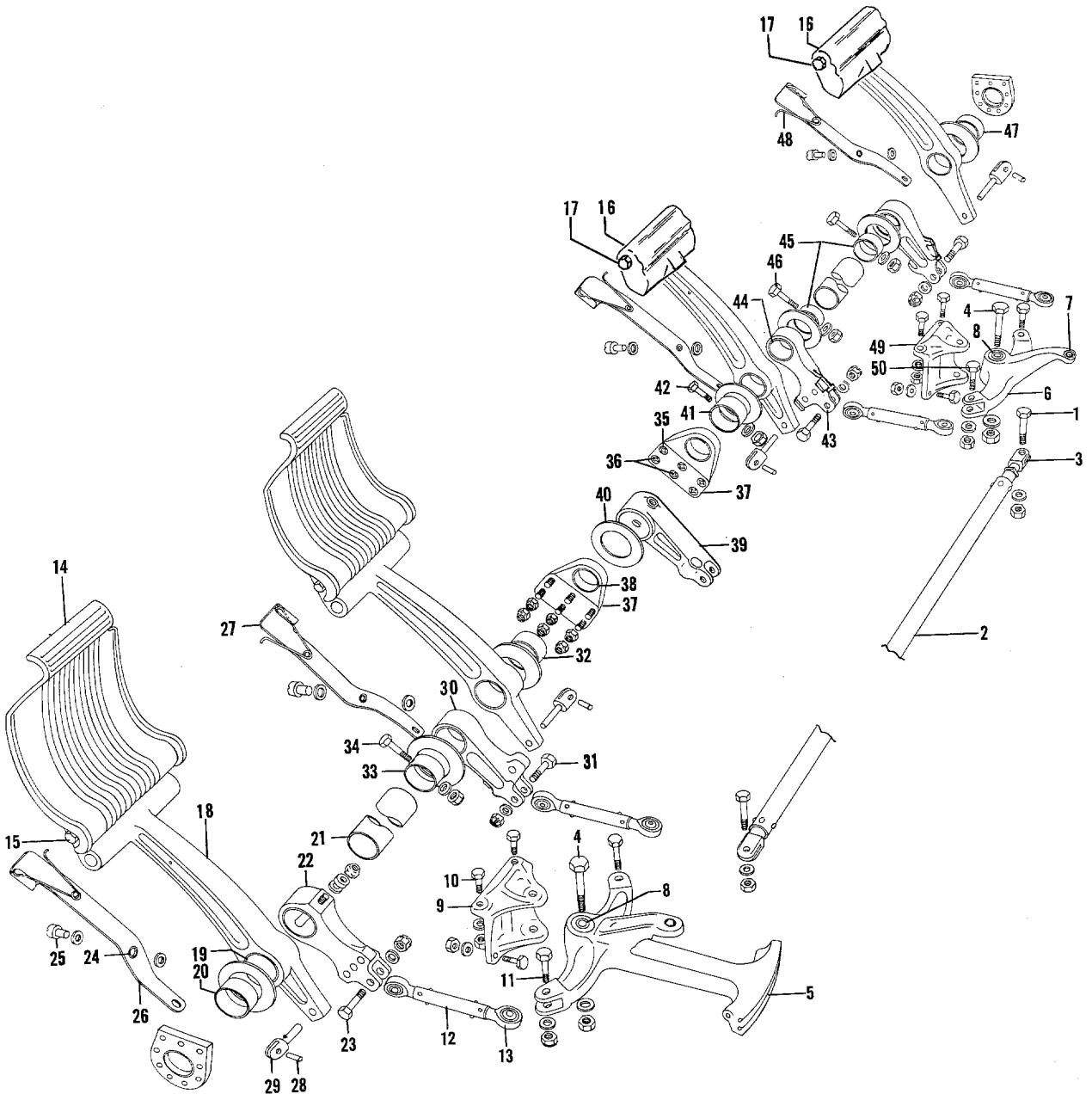

Figure 35. Rudder Pedals

FIG. & INDEX NO.	PART NO.	DESCRIPTION 1 2 3 4 5 6 7	UNITS PER ASSY	USABLE ON CODE
		SYSTEM INSTL,RUDDER PEDAL /SEE FIG. 31 FOR NHA/		
35	35-524144	. ROD ASSY,RUDDER PEDAL PUSH.	1	
		/ATTACHING PARTS/		
- 1	AN23-14	. BOLT.	1	
	AN960-10	. WASHER.	1	
	AN320-3	. NUT	1	
	AN380-2-2	. PIN	1	
		----*----		
- 2	35-524144-8	. . TUBE,RUDDER PEDAL PUSH ROD.	1	
- 3	35-524258	. . FORK,RUDDER PEDAL PUSH ROD.	2	
	AN316-6R	. . NUT	1	
	35-524137	. BELLCRANK ASSY,RUDDER CONTROL LH.	1	
	35-524138	. BELLCRANK ASSY,RUDDER CONTROL RH.	1	
		/ATTACHING PARTS/		
- 4	AN4-21	. BOLT.	1	
	AN960-416	. WASHER.	1	
	AN310-4	. NUT	1	
	AN380-2-3	. PIN	1	
		----*----		
- 5	35-524137-2	. . BELLCRANK,RUDDER CONTROL LH	1	
- 6	35-524138-2	. . BELLCRANK,RUDDER CONTROL RH	1	
- 7	A225	. . BEARING	1	
- 8	AN201K4A	. . BEARING	2	
	102933D5ZX0749	. . SPACER.	1	
- 9	35-524136	. SUPPORT,RUDDER PEDAL.	1	
		/ATTACHING PARTS/		
- 10	AN3-5A	. BOLT.	4	
	AN960-10	. WASHER.	4	
		----*----		
	35-524066	. ROD ASSY,RUDDER PEDAL PUSH.	4	
		/ATTACHING PARTS/		
- 11	AN3-11	. BOLT.	1	
	AN960-10	. WASHER.	1	
	AN310-3	. NUT	1	
	AN380-2-2	. PIN	1	
		----*----		
- 12	35-524066-2	. . TUBE,RUDDER PEDAL PUSH ROD.	1	
- 13	F3M14	. . ROD,END	2	
- 14	35-524011	. PEDAL,RUDDER CONTROL.	2	
		/ATTACHING PARTS/		
- 15	AN3-10	. BOLT.	2	
	AN960-10	. WASHER.	2	
	AN310-3	. NUT	2	
	AN380-2-2	. PIN	2	
		----*----		
- 16	35-524641	. CAP,RUDDER PEDAL.	2	
		/ATTACHING PARTS/		
- 17	AN3-44A	. BOLT.	1	
	22K1-02	. NUT	1	
		----*----		
	35-524060	. ARM ASSY,RUDDER PEDAL LH.	2	
	35-524060-1	. ARM ASSY,RUDDER PEDAL RH.	2	
- 18	35-524060-2	. . ARM,RUDDER PEDAL LH	1	
	35-524060-3	. . ARM,RUDDER PEDAL RH	1	
- 19	A1170-2	. . BEARING	1	
- 20	105739S-YZ0532	. BUSHING	1	
- 21	35-524301	. TUBE,RUDDER PEDAL	1	
- 22	35-524300	. ARM ASSY,RUDDER PEDAL /LOWER/	1	
		/ATTACHING PARTS/		
- 23	AN3-11	. BOLT.	1	
	AN960-10	. WASHER.	1	
	AN310-3	. NUT	1	
	AN380-2-2	. PIN	1	
		----*----		

FIG. & INDEX NO.	PART NO.	DESCRIPTION 1 2 3 4 5 6 7	UNITS PER ASSY	USABLE ON CODE
35	35-524170	. LEVER ASSY,RUDDER PEDAL ADJUSTING LH.	1	
	35-524170-1	. LEVER ASSY,RUDDER PEDAL ADJUSTING RH.	1	
		/ATTACHING PARTS/		
- 24	105739X-ZN0135	. BUSHING	2	
- 25	AN502-10-6	. SCREW	2	
	AN960-10L	. WASHER.	4	
		----*----		
- 26	35-524170-2	. . LEVER,RUDDER PEDAL ADJUSTING LH	1	
- 27	35-524170-3	. . LEVER,RUDDER PEDAL ADJUSTING RH	1	
- 28	102809A125-014	. . PIN	1	
- 29	35-524171	. . PIN,RUDDER PEDAL ADJUSTING.	1	
- 30	35-524143-6	. ARM ASSY,RUDDER PEDAL /LOWER/	1	
		/ATTACHING PARTS/		
- 31	AN3-11	. BOLT.	1	
	AN960-10	. WASHER.	1	
	AN310-3	. NUT	1	
	AN380-2-2	. PIN,COTTER.	1	
		----*----		
	35-524143-2	. ARM,LOWER RUDDER PEDAL.	1	
	A1170-8	. BEARING,LOWER RUDDER PEDAL ARM.	1	
- 32	105739S-YZ0391	. BUSHING	1	
- 33	105739S-YZ0594	. BUSHING	1	
		/ATTACHING PARTS/		
- 34	AN3-14A	. BOLT.	1	
	AN960-10	. WASHER.	1	
	AN365-1032	. NUT	1	
		----*----		
	35-524183	. SUPPORT ASSY,RUDDER TORQUE TUBE INBD.	2	
		/ATTACHING PARTS/		
- 35	35-524275	. SCREW	4	
	AN960-10	. WASHER.	4	
	AN365-1032	. NUT	4	
- 36	35-524275-1	. SCREW	2	
	AN960-10	. WASHER.	2	
	AN364-1032	. NUT	2	
		----*----		
- 37	35-524183-2	. . SUPPORT,RUDDER TORQUE TUBE INBD	1	
- 38	A-1170-7	. . BUSHING	1	
- 39	35-825054	. ARM,NOSE STEERING TORQUE.	1	
- 40	100951S031XW	. WASHER.	1	
- 41	105739S-YZ0641	. BUSHING	1	
		/ATTACHING PARTS/		
- 42	AN3-14A	. BOLT.	1	
	AN960-10	. WASHER.	1	
	AN365-1032	. NUT	1	
		----*----		
	35-524367	. ARM ASSY,RUDDER PEDAL LOWER LH.	1	
	35-524367-1	. ARM ASSY,RUDDER PEDAL LOWER RH.	1	
	35-524368	. ARM ASSY,RUDDER PEDAL LOWER LH.	1	
		/USE WITH DUAL BRAKE INSTL/		
- 43	35-524367-2	. . ARM,RUDDER PEDAL LOWER LH	1	
	35-524367-3	. . ARM,RUDDER PEDAL LOWER RH	1	
	35-524368-2	. . ARM,RUDDER PEDAL LOWER LH	1	
		/USE WITH DUAL BRAKE INSTL/		
- 44	A1170-8	. . BEARING	1	
- 45	105739S-YZ0594	. BUSHING	2	
		/ATTACHING PARTS/		
- 46	AN3-14A	. BOLT.	1	
	AN960-10	. WASHER.	1	
	AN365-1032	. NUT	1	
		----*----		
- 47	105739S-YZ0532	. BUSHING	1	
- 48	35-524308	. SPRING.	4	
- 49	35-524136	. SUPPORT,RUDDER PEDAL CONTROL.	1	
		/ATTACHING PARTS/		
- 50	AN3-5A	. BOLT.	4	
	AN960-10	. WASHER.	4	
		----*----		

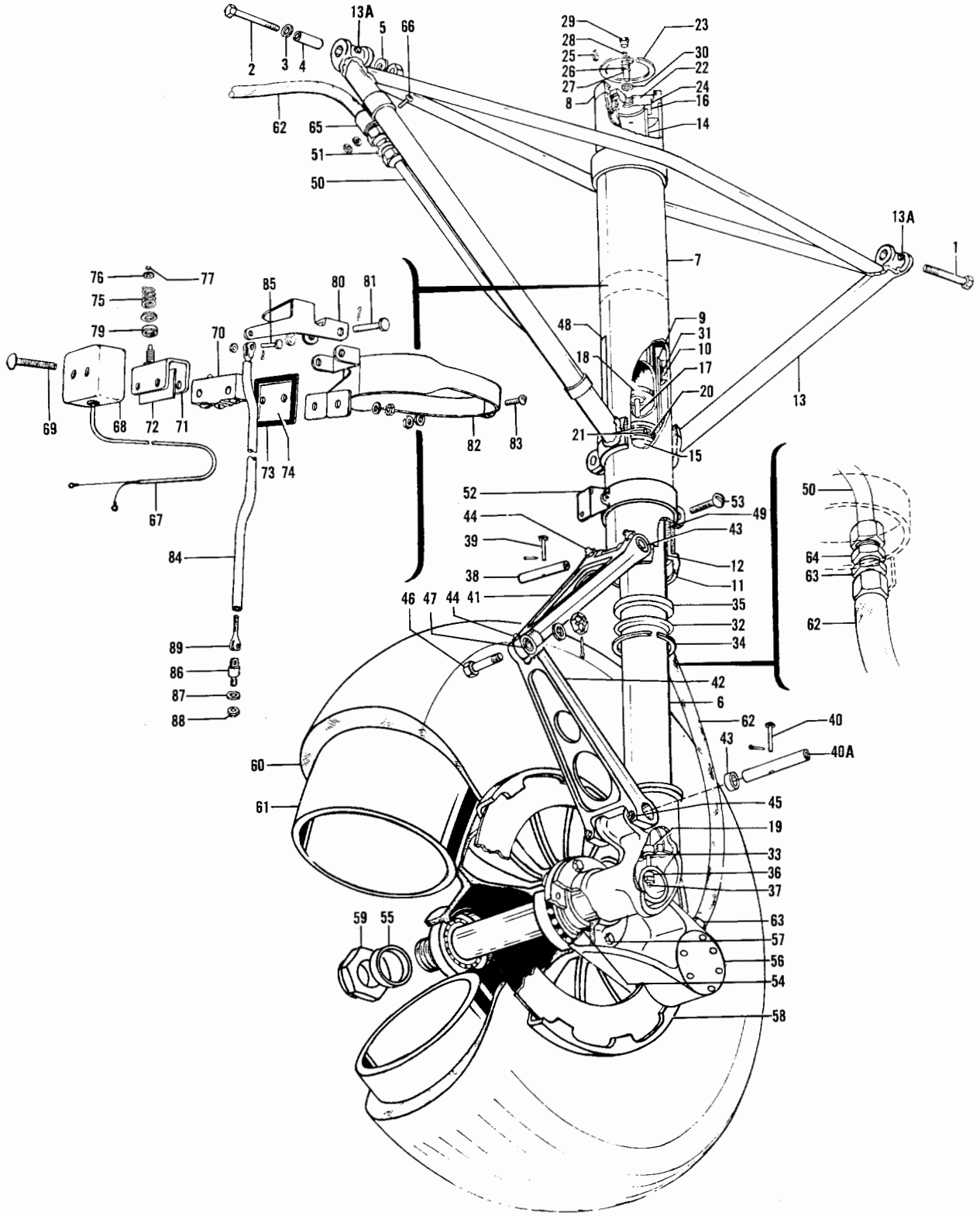

Figure 36. Main Landing Gear (TD-1 thru TD-252)

FIG. & INDEX NO.	PART NO.	DESCRIPTION 1 2 3 4 5 6 7	UNITS PER ASSY	USABLE ON CODE
		GEAR INSTL,MAIN LANDING RH.		1
36	95-810000-602	. GEAR ASSY,MAIN LANDING LH . . . . . /COMPLETE/	1	1
	95-810000-612	. GEAR ASSY,MAIN LANDING LH . . . . . /LESS TIRE,TUBE,WHEEL & BRAKE/ /SPARE ASSY,SEE SECTION 4 FOR COMPONENTS/	1	1
		. GEAR ASSY,MAIN LANDING LH		1
	95-810000-603	. GEAR ASSY,MAIN LANDING RH . . . . . /COMPLETE/	1	1
	95-810000-613	. GEAR ASSY,MAIN LANDING RH . . . . . /LESS TIRE,TUBE,WHEEL & BRAKE/ /SPARE ASSY,SEE SECTION 4 FOR COMPONENTS/	1	1
		. GEAR ASSY,MAIN LANDING RH . . . . . /ATTACHING PARTS/		1
- 1	NAS148A50	. BOLT,AFT.	1	
- 2	NAS148A52	. BOLT,FWD.	1	
- 3	NAS143-8C	. WASHER.	2	
- 4	35-815182	. BUSHING,MAIN LANDING GEAR	2	
- 5	100951X063XD	. WASHER.	2	
	100951S016XF	. WASHER /USE BETWEEN GEAR & SPAR FITTING IF. . GAP IS 0.016 TO 0.031/	1	
	100951S032XF	. WASHER /USE BETWEEN GEAR & SPAR FITTING IF. . GAP IS 0.032 TO 0.047/	1	
	AN310-8	. NUT	2	
	AN380-3-3	. PIN	2	
		----*----		
	95-810011-1	. . . ABSORBER ASSY,LOWER SHOCK LH.	1	1
- 6	95-810011-2	. . . ABSORBER ASSY,LOWER SHOCK RH.	1	1
	95-810010-1	. . . ABSORBER ASSY,UPPER SHOCK LH.	1	1
	95-810010-2	. . . ABSORBER ASSY,UPPER SHOCK RH.	1	1
	95-810010-3	. . . . BARREL ASSY,SHOCK ABSORBER.	1	1
- 7	45-815213-2	. . . . . TUBE,SHOCK ABSORBER	1	1
- 8	95-810010-5	. . . . . FITTING,BARREL END.	1	1
	45-815215	. . . . . BEARING ASSY,BARREL	1	1
- 9	45-815215-2	. . . . . TUBE,BEARING.	1	1
- 10	45-815215-4	. . . . . BUSHING,BEARING	1	1
- 11	45-815230	. . . . . FITTING,BEARING	1	1
- 12	45-815231	. . . . . BEARING,PISTON.	1	1
	95-810010-7	. . . . TRUSS ASSY,SHOCK ABSORBER LH.	1	1
- 13	95-810010-8	. . . . TRUSS ASSY,SHOCK ABSORBER RH.	1	1
- 13A	MS15002-3	. . . . . FITTING	2	1
	95-810012	. . . CONTROL ASSY,SHOCK ABSORBER ORIFICE . . .	1	1
	95-810013	. . . . TUBE ASSY,SHOCK ABSORBER CONTROL. . . .	1	1
- 14	95-810013-1	. . . . . TUBE,SHOCK ABSORBER	1	1
- 15	95-810014	. . . . . HEAD,SHOCK ABSORBER	1	1
- 16	45-815220	. . . . . COLLAR,SHOCK ABSORBER	1	1
	45-815222-4	. . . . PIN ASSY,MAIN GEAR REBOUND CONTROL. . .	1	1
- 17	45-815222-2	. . . . . PIN,MAIN GEAR REBOUND CONTROL	1	1
- 18	45-815223-4	. . . . . HEAD,MAIN GEAR REBOUND CONTROL. . . .	1	1
- 19	35-815066	. . . . SLEEVE,MAIN GEAR REBOUND CONTROL PIN. .	1	1
- 20	AN6227-24	. . . RING,O.	1	1
- 21	MS28782-24	. . . RING,BACK UP.	2	1
- 22	45-815224	. . . PLUG,MAIN LANDING GEAR BARREL END	1	1
- 23	NAS50-200	. . . RING.	1	1
- 24	AN6230-2	. . . GASKET.	1	1
- 25	45-815225	. . . LOCK,MAIN LANDING GEAR BARREL END	1	1
	35-815088-10	. . . BODY ASSY,LANDING GEAR VALVE & FILLER . .	1	1
- 26	35-815088-4	. . . . BODY,VALVE & FILLER PLUG.	1	1
- 27	35-815088-6	. . . . TUBE,VALVE & FILLER PLUG.	1	1
- 28	302D	. . . CORE,/SUPERCEDES AN809-1/	1	1

FIG. & INDEX NO.	PART NO.	DESCRIPTION 1 2 3 4 5 6 7	UNITS PER ASSY	USABLE ON CODE
36 - 29	AN813-1A	CAP	1	1
- 30	AN6290-5	GASKET,/SUPERCEDES AN902-5/	1	1
- 31	AN6227-31	RING,O	1	1
- 32	AN6231A20	SCRAPER	1	1
- 33	AN6227-6	RING,O	1	1
- 34	111200-6	RING,SNAP	1	1
- 35	45-815232	ADAPTER,MAIN GEAR PISTON SCRAPER	1	1
- 36	35-815081	WASHER,MAIN GEAR EXTENSION STOP PIN	1	1
- 37	AN365-524	NUT	1	1
	45-815011-6	KNEE ASSY,MAIN GEAR TORQUE UPPER	1	1
	45-815015-6	KNEE ASSY,MAIN GEAR TORQUE LOWER	1	1
		/ATTACHING PARTS/		
- 38	45-815237	PIN,CLEVIS /UPPER/	1	
- 39	AN392-27	PIN,UPPER	1	
- 40	AN392-23	PIN,LOWER	1	
- 40A	45-815014	PIN,LOWER	1	
	AN380-2-1	PIN,COTTER	2	
		----*----		
- 41	45-815011-4	KNEE,MAIN GEAR TORQUE UPPER	1	1
- 42	45-815015-4	KNEE,MAIN GEAR TORQUE LOWER	1	1
- 43	45-815013	BUSHING,MAIN GEAR TORQUE KNEE	2	1
- 44	1729	FITTING,TORQUE KNEE UPPER	3	1
- 45	MS15002-1	FITTING	2	1
- 46	AN5-13	BOLT	1	1
- 47	105739S-YK0431	BUSHING	1	1
	AN960-516	WASHER	1	1
	AN310-5	NUT	1	1
	AN380-2-3	PIN,COTTER	1	1
	95-810016-1	PLACARD,MAIN GEAR LH	1	1
- 48	95-810016-3	PLACARD,MAIN GEAR RH	1	1
- 49	45-815201-2	FELT,SHOCK ABSORBER	1	1
	35-815043	TUBE ASSY,HYDRAULIC BRAKE TRUSS LH	1	1
- 50	35-815044	TUBE ASSY,HYDRAULIC BRAKE TRUSS RH	1	1
- 51	AN815-4D	UNION	1	1
	35-815004	CLAMP ASSY,MAIN GEAR DOOR LH	1	1
- 52	35-815004-1	CLAMP ASSY,MAIN GEAR DOOR RH	1	1
		/ATTACHING PARTS/		
- 53	AN4-10A	BOLT	1	
	AN960-416	WASHER	1	
	AN365-428	NUT	1	
		----*----		
- 54	35-815023	BUSHING,MAIN GEAR WHEEL SPACER	1	1
- 55	35-810072	SPACER,MAIN GEAR INNER WHEEL BEARING	1	1
- 56	95-31712	BRAKE ASSY,MAIN GEAR WHEEL /SEE FIG. 37D/	1	1
		/ATTACHING PARTS/		
- 57	AN4-10A	BOLT	6	
	AN960-416	WASHER	12	
	AN365-428	NUT	6	
		----*----		
- 58	95-31711	WHEEL ASSY,MAIN LANDING GEAR /SEE FIG. 37A/	1	1
		/ATTACHING PARTS/		
- 59	AN7502-24	NUT	1	
	AN380-4-8	PIN,COTTER	1	
		----*----		
- 60	650X8	TIRE,6 PLY TUBE TYPE	1	1
- 61	650X8	TUBE	1	1
- 62	MS28741-4-0153	HOSE	2	1
- 63	AN919-6D	REDUCER	1	1
	AN6290-5	GASKET /SUPERCEDES AN902-5/	1	1
- 64	AN932-4D	UNION	1	1
	AN960-716	WASHER	1	1
	AN924-4	NUT	1	1

FIG. & INDEX NO.	PART NO.	DESCRIPTION 1 2 3 4 5 6 7	UNITS PER ASSY	USABLE ON CODE
36 - 65	35-815038	. . CLAMP ASSY,HYDRAULIC BRAKE LINE	1	1
		/ATTACHING PARTS/		
- 66	AN4-7A	. . BOLT.	2	
	AN960-416	. . WASHER.	2	
	AN365-428	. . NUT	2	
		----*----		
		ELECTRICAL INSTL,LANDING GEAR LH.		1
- 67	45-361219-3	. HARNESS ASSY,LANDING GEAR LH.	1	1
	95-361015	. SWITCH ASSY,LANDING GEAR LH	1	1
- 68	35-361135	. . BOX,LANDING GEAR SAFETY SWITCH LH	1	1
		/ATTACHING PARTS/		
- 69	AN526-632-22	. . SCREW	2	
	AN960D6	. . WASHER.	2	
	AN365-632	. . NUT	2	
		----*----		
- 70	MS25026-1	. . SWITCH,/SUPERCEDES AN3210-1/.	1	1
- 71	MC2711	. . ACTUATOR.	1	1
- 72	45-364238	. . INSULATOR,LIMIT SWITCH.	2	1
- 73	35-361136	. . GASKET,LIMIT SWITCH	1	1
- 74	35-361134	. . COVER,SAFETY SWITCH	1	1
	AN960A816L	. . WASHER.	2	1
- 75	35-361150	. . SPRING,PLUNGER ASSIST	1	1
- 76	100951DD032YF	. . WASHER.	1	1
- 77	NAS51-31	. . RING,SNAP	1	1
- 78		. . DELETED		
- 79	35-361153	. . WASHER,MICRO SWITCH ACTUATOR.	1	1
- 80	35-361132-1	. . ARM,LANDING GEAR SAFETY SWITCH LH	1	1
	35-361132	. . ARM,LANDING GEAR SAFETY SWITCH RH	1	1
		/ATTACHING PARTS/		
- 81	AN393-29	. . PIN	1	
	AN960D10	. . WASHER.	1	
	AN380-2-1	. . PIN,COTTER.	1	
		----*----		
- 82	35-361139	. . BRACKET ASSY,LANDING GEAR SAFETY SWITCH . .	1	1
		/ATTACHING PARTS/		
- 83	AN3-5A	. . BOLT.	1	
	AN960D10	. . WASHER.	2	
	AN365-1032	. . NUT	1	
		----*----		
- 84	35-361145	. LINK ASSY,ALIGHTING GEAR SAFETY SWITCH. . . .	1	1
		/ATTACHING PARTS/		
- 85	AN393-13	. PIN	2	
	AN960D10	. WASHER.	4	
	AN380-2-1	. PIN,COTTER.	2	
		----*----		
- 86	AN42-4	. BOLT,EYE.	1	1
		/ATTACHING PARTS/		
- 87	AN960-10L	. WASHER.	2	
- 88	AN310-3	. NUT	1	
		----*----		
- 89	AN161-16RS	. FORK.	1	1

CODE EFFECTIVITY

1 TD-1 THRU TD-251

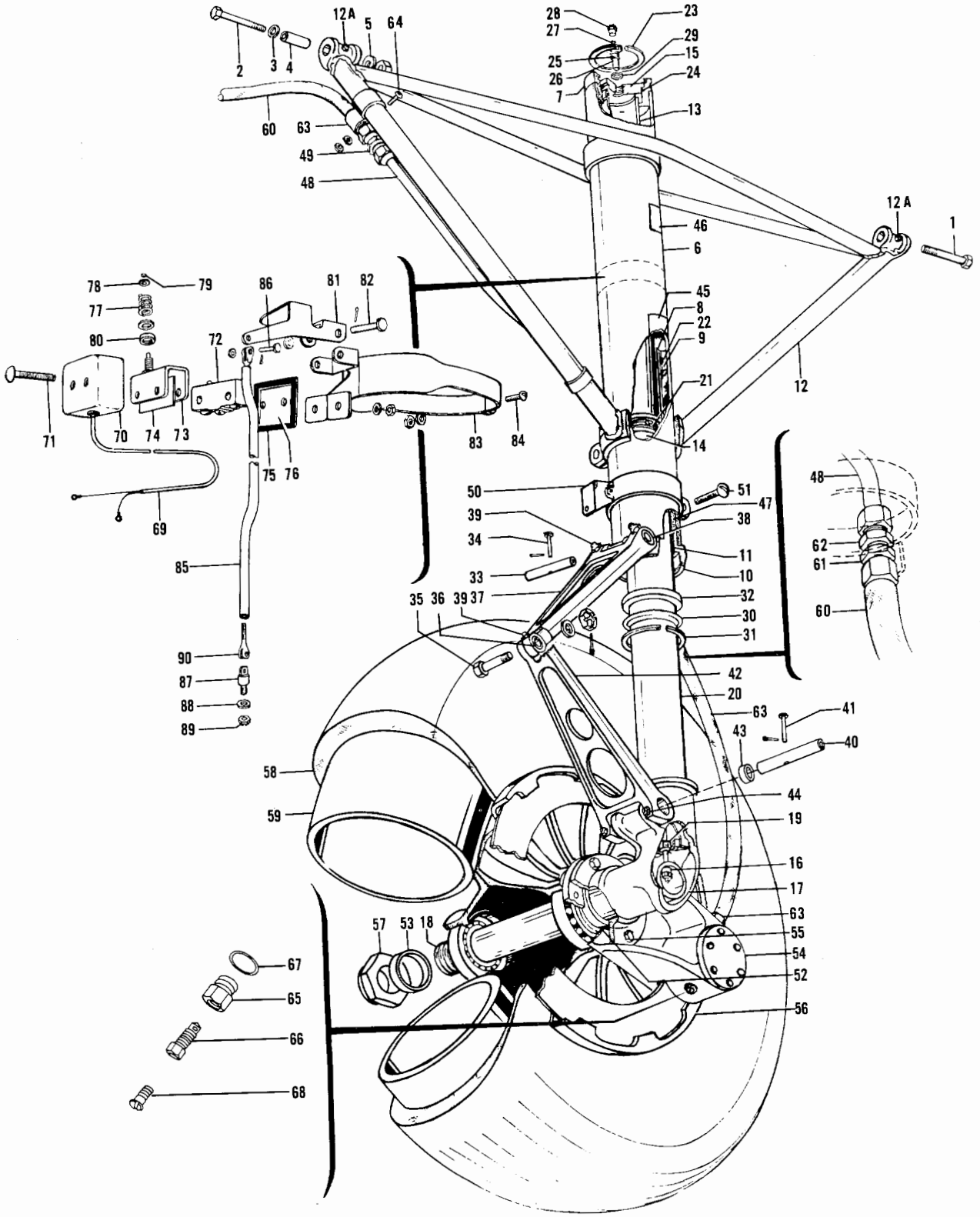

Figure 36A. Main Landing Gear (TD-253 thru TD-523)

FIG. & INDEX NO.	PART NO.	DESCRIPTION 1 2 3 4 5 6 7	UNITS PER ASSY	USABLE ON CODE
		GEAR INSTL,LH		1
		GEAR INSTL,RH		1
		GEAR INSTL,LH		2
		GEAR INSTL,RH		2
		GEAR INSTL,LH		3
		GEAR INSTL,RH		3
36A-	35-815196-612	. GEAR ASSY,LH /LESS TIRE,TUBE,WHEEL & BRAKE/	1	1
	35-815196-613	. GEAR ASSY,RH /LESS TIRE,TUBE,WHEEL & BRAKE/	1	1
	35-815196-691	. GEAR ASSY,LH /LESS TIRE,TUBE,WHEEL & BRAKE.	1	4
	35-815196-692	. GEAR ASSY,RH /LESS TIRE,TUBE,WHEEL & BRAKE.	1	4
	35-815196-603	. GEAR ASSY,LH /COMPLETE/	1	5
	35-815196-604	. GEAR ASSY,RH /COMPLETE/	1	5
	35-815196-616	. GEAR ASSY,LH /COMPLETE/	1	3
	35-815196-617	. GEAR ASSY,RH /COMPLETE/	1	3
		/ATTACHING PARTS/		
- 1	NAS148A50	. BOLT,AFT.	1	
- 2	NAS148A52	. BOLT,FWD.	1	
- 3	NAS143-8C	. WASHER.	2	
- 4	35-815182	. BUSHING	2	
- 5	100951X063XD	. WASHER.	2	
	100951X016XF	. WASHER /USED BETWEEN GEAR & SPAR FITTING IF GAP IS 0.016 TO 0.031/	1	
	100951X032XF	. WASHER /USED BETWEEN GEAR & SPAR FITTING IF GAP IS 0.032 TO 0.047/	1	
	AN310-8	. NUT	2	
	AN380-3-3	. PIN,COTTER.	2	
		----*----		
	35-815192-1	. . SHOCK ABSORBER ASSY,LH.	1	1
	35-815192-39	. . SHOCK ABSORBER ASSY,RH.	1	4
	35-815192-2	. . SHOCK ABSORBER ASSY,LH.	1	1
	35-815192-40	. . SHOCK ABSORBER ASSY,RH.	1	4
	35-815192-3	. . . SHOCK ABSORBER ASSY,UPPER LH.	1	6
	35-815192-4	. . . SHOCK ABSORBER ASSY,UPPER RH.	1	6
	35-815192-9	. . . . BARREL ASSY,SHOCK ABSORBER.	1	6
- 6	35-815192-23	. . . . . TUBE,SHOCK ABSORBER	1	6
- 7	35-815192-13	. . . . . HEAD,BARREL	1	6
	45-815215	. . . . . BEARING ASSY,BARREL	1	6
- 8	45-815215-2	. . . . . TUBE,BEARING.	1	6
- 9	45-815215-4	. . . . . BUSHING,BEARING	1	6
- 10	45-815230	. . . . . FITTING,BEARING	1	6
- 11	45-815231	. . . . . BEARING,PISTON.	1	6
- 12	95-810010-7	. . . . TRUSS ASSY,LH	1	6
	95-810010-8	. . . . TRUSS ASSY,RH	1	6
- 12A	MS15002-3	. . . . FITTING,ZERK.	2	7
	35-815192-7	. . . TUBE ASSY,ORIFICE	1	1
	35-815192-41	. . . TUBE ASSY,ORIFICE	1	4
- 13	35-815192-17	. . . . TUBE,ORIFICE.	1	6
- 14	35-815192-19	. . . . HEAD,ORIFICE.	1	1
	35-815192-37	. . . . HEAD,ORIFICE.	1	4
- 15	35-815192-21	. . . . CAP,ORIFICE	1	6
	35-815192-5	. . . SHOCK ABSORBER ASSY,LOWER LH.	1	6
	35-815192-6	. . . SHOCK ABSORBER ASSY,LOWER RH.	1	6
	35-815192-25	. . . . AXLE & SOCKET ASSY,LH	1	6
	35-815192-26	. . . . AXLE & SOCKET ASSY,RH	1	6
		/ATTACHING PARTS/		
- 16	35-815081	. . . . WASHER.	1	
	AN365-524	. . . . NUT	1	
		----*----		
- 17	35-815197-1	. . . . . SOCKET,LH	1	6
	35-815197-2	. . . . . SOCKET,RH	1	6
- 18	35-815022	. . . . . AXLE.	1	6
	16XXXX	. . . . CORK.	1	6
	35-815192-27	. . . . PISTON ASSY	1	6
- 19	35-815192-29	. . . . . BRAZE ASSY,PISTON PLUG.	1	6
- 20	35-815192-15	. . . . . TUBE,PISTON	1	6
- 21	35-380020-1	. . . RING,PISTON	1	6

FIG. & INDEX NO.	PART NO.	DESCRIPTION 1 2 3 4 5 6 7	UNITS PER ASSY	USABLE ON CODE
36A- 22	AN6227-31	. . . RING,O.	1	6
- 23	NAS50-262	. . . RING,SNAP	1	6
- 24	AN6230-7	. . . GASKET.	1	6
	35-815088-18	. . . BODY ASSY,FILLER VALVE.	1	8
- 25	35-815088-4	. . . . BODY.	1	8
- 26	35-815088-16	. . . . TUBE.	1	8
	118642-3	. . . BODY,FILLER VALVE	1	9
- 27	302D	. . . CORE,/SUPERCEDES AN809-1/	1	6
- 28	AN813-1A	. . . CAP	1	8
	MS20813-1	. . . CAP	1	9
- 29	AN6290-5	. . . GASKET.	1	8
	MS28878-5	. . . GASKET.	1	9
- 30	MS28776-20	. . . SCRAPER	1	6
- 31	111200-6	. . . RING,SNAP	1	6
- 32	45-815232	. . . ADAPTER,PISTON SCRAPER.	1	6
	45-815011-6	. . . KNEE ASSY,UPPER TORQUE. /ATTACHING PARTS/	1	6
- 33	45-815237	. . . PIN	1	
- 34	AN392-27	. . . PIN	1	
	AN380-2-1	. . . PIN,COTTER.	1	
- 35	AN5-13	. . . BOLT.	1	
- 36	105739S-YK0431	. . . BUSHING	1	
	AN960-516	. . . WASHER.	1	
	AN310-5	. . . NUT	1	
	AN380-2-3	. . . PIN,COTTER.	1	
		----*----		
- 37	45-815011-4	. . . . KNEE,UPPER TORQUE	1	6
- 38	45-815013	. . . . BUSHING	2	6
- 39	1729	. . . . FITTING,ZERK.	3	6
	35-815194	. . . KNEE ASSY,LOWER TORQUE. /ATTACHING PARTS/	1	6
- 40	45-815237	. . . PIN	1	
- 41	AN392-23	. . . PIN	1	
	AN380-2-1	. . . PIN,COTTER.	1	
		----*----		
- 42	35-815194-1	. . . . KNEE,LOWER TORQUE	1	6
- 43	45-815013	. . . . BUSHING	2	6
- 44	MS15002-1	. . . . FITTING,ZERK.	2	6
- 45	35-810160	. . . PLATE,LH GEAR SHOCK STRUT INSTRUCTIONS.	1	1
	96-810010	. . . PLATE,LH GEAR SHOCK STRUT INSTRUCTIONS.	1	4
	35-810161	. . . PLATE,RH GEAR SHOCK STRUT INSTRUCTIONS.	1	1
	96-810011	. . . PLATE,RH GEAR SHOCK STRUT INSTRUCTIONS.	1	4
- 46	112406	. . . PLACARD,LANDING GEAR PATENT	1	6
- 47	45-815201-2	. . . FELT,SHOCK ABSORBER	1	6
- 48	35-815043	. . TUBE ASSY,LH.	1	6
	35-815044	. . TUBE ASSY,RH.	1	6
- 49	AN815-4D	. . UNION	1	6
- 50	35-815004	. . CLAMP ASSY,LH	1	6
	35-815004-1	. . CLAMP ASSY,RH /ATTACHING PARTS/	1	6
- 51	AN4-10A	. . BOLT.	1	
	AN960-416	. . WASHER.	1	
	AN365-428	. . NUT	1	
		----*----		
- 52	35-815023	. . BUSHING,WHEEL SPACER.	1	10
	35-815023	. . BUSHING,WHEEL SPACER.	2	11
- 53	35-810072	. . SPACER.	1	10
- 54	95-31712	. . BRAKE ASSY /SEE FIG. 37D/	1	10
	95-32167	. . BRAKE ASSY /SEE FIG. 37E/	1	12
	95-32412	. . BRAKE ASSY /SEE FIG. 37F/	1	14
	95-32679	. . BRAKE ASSY /SEE FIG. 37G/ /ATTACHING PARTS/	1	3
- 55	AN4-10A	. . BOLT.	6	
	AN960-416	. . WASHER.	12	
	AN365-428	. . NUT	6	
		----*----		

FIG. & INDEX NO.	PART NO.	DESCRIPTION 1 2 3 4 5 6 7	UNITS PER ASSY	USABLE ON CODE
36A- 56	95-31711	WHEEL ASSY /SEE FIG. 37A/	1	10
	95-32135	WHEEL ASSY /SEE FIG. 37B/	1	11
		/ATTACHING PARTS/		
- 57	AN7502-24	NUT	1	
	AN380-4-8	PIN,COTTER	1	
		----*----		
- 58	650X8	TIRE,TUBE TYPE /6 PLY/	1	10
	650X8	TIRE,TUBELESS TYPE /6 PLY/	1	11
- 59	650X8	TUBE	1	10
- 60	MS28741-4-0153	HOSE	2	6
- 61	AN919-6D	REDUCER /USE WITH 95-32167/	1	12
	AN815-4D	UNION /USE WITH 95-31712/	1	10
	AN6290-4	GASKET /USE WITH 95-31712/	1	10
	AN6290-6	GASKET /USE WITH 95-32167/	1	12
- 62	AN832-4D	UNION	1	6
	AN960-716	WASHER	1	6
	AN924-4	NUT	1	6
- 63	35-815038	CLAMP ASSY	1	6
		/ATTACHING PARTS/		
- 64	AN4-7A	BOLT	2	
	AN960-416	WASHER	2	
	AN365-428	NUT	2	
		----*----		
- 65	95-3218	ADAPTER,BLEEDER /USE WITH 95-321712 ONLY/	1	10
- 66	95-5039	VALVE,BLEEDER /USE WITH 95-31712 ONLY/	1	10
		/SUPERCEDES AN6204-2/		
- 67	AN6290-4	GASKET,BLEEDER /USE WITH 95-31712 ONLY/	1	10
- 68	AN502-10-4	SCREW,BLEEDER /USE WITH 95-31712 ONLY/	1	10
		ELECTRICAL INSTL,SAFETY SWITCH		6
- 69	45-361219-3	HARNESS ASSY,SAFETY SWITCH	1	6
	95-361015	SWITCH ASSY,SAFETY	1	6
- 70	35-361135	BOX,SAFETY SWITCH	1	6
		/ATTACHING PARTS/		
- 71	AN526-632-22	SCREW	2	
	AN960D6	WASHER	2	
	AN365-632	NUT	2	
		----*----		
- 72	MS25026-1	SWITCH,/SUPERCEDES AN3210-1/	1	6
- 73	MC2711	ACTUATOR	1	6
- 74	45-364238	INSULATOR	2	6
- 75	35-361136	GASKET	1	6
- 76	35-361134	COVER	1	6
	AN960A816L	WASHER	2	6
- 77	35-361150	SPRING	1	6
- 78	100951DD032F	WASHER	1	6
- 79	NAS51-31	RING,SNAP	1	6
- 80	35-361153	WASHER	1	6
- 81	35-361132-1	ARM	1	6
		/ATTACHING PARTS/		
- 82	AN393-29	PIN	1	
	AN960D10	WASHER	1	
	AN380-2-1	PIN,COTTER	1	
		----*----		
- 83	35-361139	BRACKET ASSY	1	6
		/ATTACHING PARTS/		
- 84	AN3-5A	BOLT	1	
	AN960D10	WASHER	2	
	AN365-1032	NUT	1	
		----*----		
- 85	35-361145	LINK ASSY	1	6
		/ATTACHING PARTS/		
- 86	AN393-13	PIN	2	
	AN960D10	WASHER	4	
	AN380-2-1	PIN,COTTER	2	
		----*----		

FIG. & INDEX NO.	PART NO.	DESCRIPTION 1 2 3 4 5 6 7	UNITS PER ASSY	USABLE ON CODE
36A- 87	AN42-4	• BOLT,EYE.	1	6
		/ATTACHING PARTS/		
- 88	AN960-10L	• WASHER.	2	
- 89	AN310-3	• NUT	1	
		----*----		
- 90	AN161-16RS	• FORK.	1	6

CODE	EFFECTIVITY	CODE	EFFECTIVITY
1	TD-252 THRU TD-302	2	TD-303 THRU TD-458
3	TD-459 THRU TD-523	4	TD-303 THRU TD-523
5	TD-252 THRU TD-458	6	TD-252 THRU TD-523
7	TD-453 THRU TD-523	8	TD-252 THRU TD-497
9	TD-498 THRU TD-523	10	TD-252 THRU TD-300
11	TD-301 THRU TD-523	12	TD-301 THRU TD-399
13	TD-412 THRU TD-458	14	TD-400 THRU TD-458

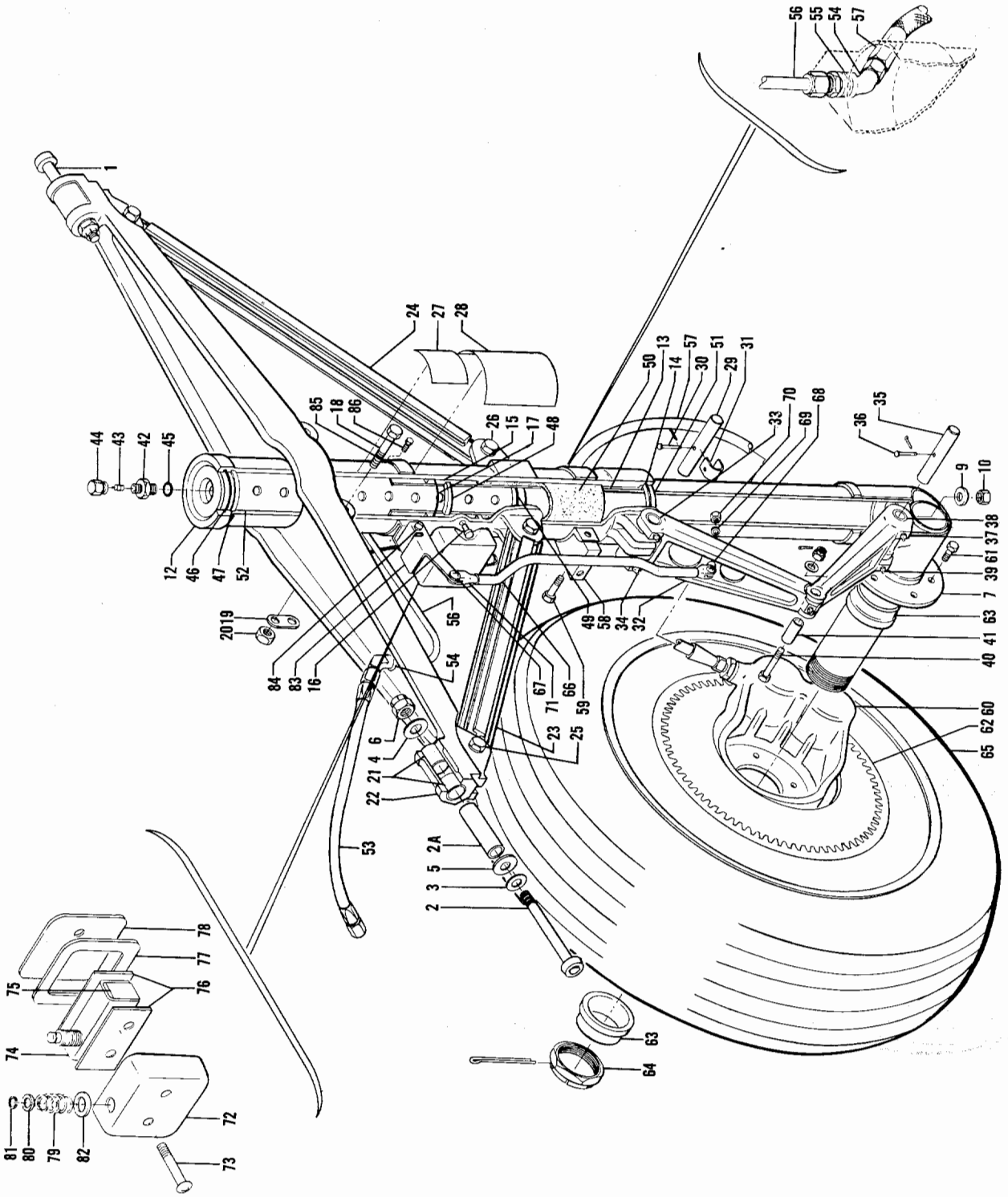

Figure 37. Main Landing Gear (TD-524 And After)

FIG. & INDEX NO.	PART NO.	DESCRIPTION 1 2 3 4 5 6 7	UNITS PER ASSY	USABLE ON CODE
37 -	95-810002-1	GEAR INSTL,LH MAIN.	NP	1
	95-810002-5	GEAR INSTL,LH MAIN.	NP	9
	95-810002-19	GEAR INSTL,LH MAIN.	NP	10
	35-810026-21	GEAR INSTL,LH MAIN.	NP	11
	95-810002-31	GEAR INSTL,LH MAIN.	NP	13
	95-810002-2	GEAR INSTL,RH MAIN.	NP	1
	95-810002-6	GEAR INSTL,RH MAIN.	NP	9
	95-810002-20	GEAR INSTL,RH MAIN.	NP	10
	35-810026-22	GEAR INSTL,RH MAIN.	NP	11
	95-810002-32	GEAR INSTL,RH MAIN.	NP	13
	95-810002-601	. GEAR ASSY,LH /COMPLETE/	1	1
	95-810002-605	. GEAR ASSY,LH /COMPLETE/	1	9
	95-810002-751	. GEAR ASSY,LH /LESS TIRE,WHEEL AND BRAKE/. . .	1	9
	95-810002-615	. GEAR ASSY,LH /COMPLETE/	1	10
	95-810002-753	. GEAR ASSY,LH /LESS TIRE,WHEEL AND BRAKE/. . .	1	10
	35-810026-603	. GEAR ASSY,LH /COMPLETE/	1	11
	95-810002-617	. GEAR ASSY,LH /COMPLETE/	1	13
	95-810002-602	. GEAR ASSY,RH /COMPLETE/	1	1
	95-810002-606	. GEAR ASSY,RH /COMPLETE/	1	9
	95-810002-752	. GEAR ASSY,RH /LESS TIRE,WHEEL AND BRAKE/. . .	1	9
	95-810002-616	. GEAR ASSY,RH /COMPLETE/	1	10
	95-810002-754	. GEAR ASSY,RH /LESS TIRE,WHEEL AND BRAKE/. . .	1	10
	35-810026-604	. GEAR ASSY,RH COMPLETE/.	1	11
	95-810002-618	. GEAR ASSY,RH /COMPLETE/	1	13
		/ATTACHING PARTS/		
- 1	¤NAS148A67	. BOLT.	1	
- 2	¤NAS148A69/M/	. BOLT.	1	
- 2A	¤35-815250	. BUSHING	2	
- 3	¤NAS143-8C	. WASHER /SUPERSEDES MS20002C8/	2	
- 4	¤AN960-816	. WASHER.	2	
- 5	¤100951S016XF	. WASHER /USED BETWEEN GEAR & SPAR FITTING IF .	2	
		GAP IS 0.016 TO 0.031/		
	¤100951S032XF	. WASHER /USED BETWEEN GEAR & SPAR FITTING IF .	2	
		GAP IS 0.032 TO 0.047/		
- 6	¤AN310-8	. NUT	2	
	¤AN380-3-3	. PIN,COTTER /SUPERSEDES MS24665-283/	2	
		----*----		
- 7	¤35-815192-33	. . SHOCK ASSY,LOWER LH	1	1
	35-815260-1	. . SHOCK ASSY,LOWER LH	1	2
		/SUPERSEDES 35-815192-45/		
	¤35-815192-34	. . SHOCK ASSY,LOWER RH	1	1
	¤35-815260-2	. . SHOCK ASSY,LOWER RH	1	2
		/SUPERSEDES 35-815192-46/		
- 8		. . DELETED		
- 9	¤35-815081	. . WASHER.	1	
- 10	¤MS20365-524	. . NUT /SUPERSEDES AN365-524/.	1	
- 11		. . DELETED		
	¤35-815246-5	. . CYLINDER ASSY,UPPER LH SHOCK ABSORBER . . .	1	3
	¤35-815246-7	. . CYLINDER ASSY,UPPER RH SHOCK ABSORBER . . .	1	3
- 12	35-815246-1	. . . CYLINDER,LH	1	3
	35-815246-3	. . . CYLINDER,RH	1	3
- 13	¤35-815246-9	. . . BEARING	1	3
- 14	¤RRN237C	. . . RING,RETAINING.	1	3
- 15	¤35-815246-11	. . . BEARING	1	3
- 16	SALP-T6-6	. . . HUCKBOLT.	2	3
	¤6LC-C6	. . . COLLAR.	2	3
- 17	¤MS28775-138	. . . O,RING.	1	3

FIG. & INDEX NO.	PART NO.	DESCRIPTION 1 2 3 4 5 6 7	UNITS PER ASSY	USABLE ON CODE
37 -	35-815251-1	BRACE ASSY,UPPER	1	3
		/ATTACHING PARTS/		
- 18	¤NAS334CPA30	BOLT	2	
- 19	35-815256	CONNECTOR,BRACE TO CLAMP	2	
- 20	¤MS20365-428	NUT	2	
		----*----		
- 21	¤10DU12	BUSHING	4	3
- 22	¤35-815251-3	BRACE	1	3
- 23	35-815252-1	COLUMN,FWD	1	3
- 24	35-815252-3	COLUMN,AFT	1	3
		/ATTACHING PARTS/		
- 25	¤NAS464P7LA16/M/	BOLT,UPPER	1	
- 26	¤35-815247-15	BOLT,LOWER	1	
	¤AN960D716	WASHER	2	
	AN960D716L	WASHER	4	
	¤MS20364-720	NUT	2	
		----*----		
- 27	¤112406	PLACARD	1	3
- 28	35-810166	PLATE,LH	1	1
	¤35-810171	PLATE,LH	1	4
	96-810020	PLATE,LH	1	5
	35-810165	PLATE,RH	1	1
	¤35-810170	PLATE,RH	1	4
	96-810021	PLATE,RH	1	5
	¤45-815011-10	KNEE ASSY,UPPER	1	3
		/ATTACHING PARTS/		
- 29	¤45-815237	PIN	1	
- 30	MS20392-1-21	PIN	1	
- 31	¤35-815253	STOP	1	
	¤MS24665-130	PIN,COTTER /SUPERSEDES AN380-2-1/	1	
		----*----		
- 32	¤45-815011-8	KNEE,UPPER	1	3
- 33	¤45-815013	BUSHING	2	3
- 34	¤1729	FITTING,ZERK	3	3
	35-815194-3	KNEE ASSY,LOWER TORQUE	1	3
		/ATTACHING PARTS/		
- 35	¤45-815237	PIN	1	
- 36	¤AN392-27	PIN /SUPERSEDES MS20392-1-27/	1	
	¤MS24665-130	PIN,COTTER /SUPERSEDES AN380-2-1/	1	
		----*----		
- 37	¤35-815194-1	KNEE,LOWER	1	3
- 38	¤45-815013	BUSHING	2	3
- 39	¤MS15002-1	FITTING,ZERK	2	3
- 40	¤AN5-13/M/	BOLT	1	3
- 41	¤105739S-YK0431	BUSHING	1	3
	¤AN960-516	WASHER	1	3
	¤AN310-5	NUT	1	3
	¤AN380-2-3	PIN,COTTER	1	3
- 42	¤118642-7	VALVE,AIR BODY	1	3
- 43	¤302D	CORE	1	3
- 44	MS20813-1	CAP	1	3
- 45	¤MS28778-5	GASKET	1	3
- 46	¤RRN237C	RING,RETAINING	1	3
- 47	¤AN6230B5	GASKET	1	3
- 48	¤AN6227B31	PACKING	1	3
- 49	¤35-380020-1	RING,PISTON	1	3
- 50	¤35-815247-9	FELT	1	3
- 51	¤504271	SEAL,SCRAPER	1	3
- 52	¤35-815249-1	BRAZE ASSY,ORIFICE	1	3
- 53	¤MS28741-4-0125	HOSE ASSY	1	3
- 54	¤AN837-4D	ELBOW	2	3
- 55	¤AN960D716	WASHER	3	3
	¤AN924-4D	NUT	2	3
- 56	¤95-810002-3	TUBE ASSY,LH BRAKE	1	4
	95-810002-37	TUBE ASSY,LH BRAKE	1	5
	¤95-810002-4	TUBE ASSY,RH BRAKE	1	4
	95-810002-38	TUBE ASSY,RH BRAKE	1	5

FIG. & INDEX NO.	PART NO.	DESCRIPTION 1 2 3 4 5 6 7	UNITS PER ASSY	USABLE ON CODE
37 - 57	¤MS28741-4-0140	. HOSE ASSY,BRAKE	1	1
	¤MS28741-4-0165	. HOSE ASSY,BRAKE	1	12
	¤MS28741-4-0180	. HOSE ASSY,BRAKE	1	10
	¤MS28741-4-0170	. HOSE ASSY,BRAKE	1	11
	¤MS28741-4-0160	. HOSE ASSY,BRAKE	1	13
	¤AN822-4	. ELBOW	1	2
- 58	¤35-815004	. CLAMP ASSY,LH	1	3
	¤35-815004-1	. CLAMP ASSY,RH	1	3
		/ATTACHING PARTS/		
- 59	¤AN4-10A/M/	. BOLT.	1	
	¤AN960-416	. WASHER.	1	
	¤MS20365-428	. NUT	1	
		----*----		
	35-815196-25	. WHEEL & BRAKE ASSY KIT,BALANCED	1	1
	95-810002-15	. WHEEL & BRAKE ASSY KIT,BALANCED LH.	1	9
	95-810002-23	. WHEEL & BRAKE ASSY KIT,BALANCED LH.	1	10
	95-810002-16	. WHEEL & BRAKE ASSY KIT,BALANCED RH.	1	9
	95-810002-24	. WHEEL & BRAKE ASSY KIT,BALANCED RH.	1	10
	35-810026-7	. WHEEL & BRAKE ASSY KIT,BALANCED LH & RH . . .	1	11
	95-810002-33	. WHEEL & BRAKE ASSY KIT,BALANCED LH & RH . . .	1	13
- 60	¤95-32679	. . BRAKE ASSY /SEE FIG. 37F/	1	1
	¤95-300001-5	. . BRAKE ASSY,LH /SEE FIG. 37G/.	1	12
	¤95-300001-6	. . BRAKE ASSY,RH /SEE FIG. 37G/.	1	12
	¤35-8002-5	. . BRAKE ASSY /SEE FIG. 37H/	1	11
	30-66	. . BRAKE ASSY /SEE FIG. 37I/	1	13
		/ATTACHING PARTS/		
- 61	¤AN4-10A/M/	. . BOLT.	6	1
	¤NAS145-24	. . BOLT.	4	9
	¤NAS145-17	. . BOLT.	5	10
	¤AN5-6A	. . BOLT.	5	11
	¤NAS145-17	. . BOLT.	5	13
	¤AN960-416	. . WASHER.	6	1
	¤AN960-516	. . WASHER.	4	2
	¤MS20365-428	. . NUT	6	1
	¤MS20365-524	. . NUT	4	2
		----*----		
- 62	95-32135	. . WHEEL ASSY /SEE FIG. 37B/	NP	1
		/ORDER 96-300001-3/		
	95-810002-9	. . WHEEL ASSY,BALANCED	1	9
	95-810002-21	. . WHEEL ASSY,BALANCED	1	10
	95-810002-27	. . WHEEL ASSY,BALANCED	1	11
	95-810002-39	. . WHEEL ASSY,BALANCED	1	13
		/ATTACHING PARTS/		
- 63	¤35-815023	. . BUSHING,INBD AND OUTBD.	2	1
	¤35-815254-7	. . BUSHING,OUTBD	1	9
	¤35-815254-9	. . BUSHING,INBD.	1	9
	¤35-815023-1	. . BUSHING,OUTBD	1	13
	¤95-810002-13	. . BUSHING	1	13
- 64	¤AN7502-24	. . NUT	1	
	¤100951X100WL	. . WASHER.	AR	
	¤AN380-4-8	. . PIN,COTTER.	1	
		----*----		
	¤7 00X6 6P TL	. . . TIRE,6 PLY TUBELESS	1	9
	¤7 00X6 6P TT	. . . TIRE,6 PLY TUBE TYPE.	1	10
- 65	¤6 50X8 6P TL	. . . TIRE,6 PLY TUBELESS	1	1
	6 50X8 8P TT	. . . TIRE,8 PLY TUBE TYPE.	1	13
	6 50X8	. . . TUBE.	1	13
- 66	¤35-361145	. LINK ASSY,LANDING GEAR SAFETY SWITCH.	1	3
		/ATTACHING PARTS/		
- 67	¤AN393-13	. PIN	2	
	¤AN960D10	. WASHER.	2	
	¤MS24665-130	. PIN,COTTER /SUPERSEDES AN380-2-1/	2	
		----*----		
- 68	¤AN42-4	. EYEBOLT	1	3
		/ATTACHING PARTS/		
- 69	¤AN960-10L	. WASHER.	2	
- 70	¤AN310-3	. NUT	1	
		----*----		

FIG. & INDEX NO.	PART NO.	DESCRIPTION 1 2 3 4 5 6 7	UNITS PER ASSY	USABLE ON CODE
37 - 71	¤AN161-16RS	. FORK.	1	3
	95-361015	. SWITCH INSTL,LANDING GEAR SAFETY.	NP	3
- 72	¤35-361135	. . BOX,LANDING GEAR SAFETY SWITCH. . . . . /ATTACHING PARTS/	1	3
- 73	AN526-632-22	. . SCREW	2	
	¤AN960A6	. . WASHER /SUPERSEDES AN960D6/	2	
	¤MS20365-632	. . NUT /SUPERSEDES AN365-632/.	2	
		----*----		
- 74	¤MC2711	. . SWITCH,/SUPERSEDES AN3210-1/.	1	3
- 75	¤MS25026-1	. . ACTUATOR.	1	3
- 76	¤45-364238	. . INSULATOR	2	3
- 77	¤35-361136	. . GASKET.	1	3
- 78	¤35-361134	. . COVER	1	3
	AN960A816L	. . WASHER.	2	3
- 79	¤35-361150	. . SPRING.	1	3
- 80	100951DD032YL	. . WASHER.	1	3
- 81	¤NAS51-31	. . RING,SNAP	1	3
- 82	¤35-361153	. . WASHER.	1	3
- 83	¤35-361132-1	. . ARM,SAFETY SWITCH . . . . . /ATTACHING PARTS/	1	3
- 84	¤AN393-29	. . PIN	1	
	¤AN960D10	. . WASHER.	1	
	¤MS24665-130	. . PIN,COTTER /SUPERSEDES AN380-2-1	1	
		----*----		
- 85	35-361133	. . BRACKET ASSY. . . . . /ATTACHING PARTS/	1	3
- 86	¤AN3-11/M/	. . BOLT.	1	
	¤AN960D10	. . WASHER.	2	
	¤MS20365-1032	. . NUT	1	
		----*----		

CODE	EFFECTIVITY	CODE	EFFECTIVITY
1	TD-524 THRU TD-533	2	TD-534 AND AFTER
3	TD-524 AND AFTER	4	TD-534 THRU TD-679
5	TD-680 AND AFTER	6	DELETED
7	DELETED	8	DELETED
9	TD-534 THRU TD-602	10	TD-603 THRU TD-690, AND TD-694
11	TD-691 THRU TD-698, EXCEPT TD-694 & 697	12	TD-534 THRU TD-690, AND TD-694
13	TD-697 AND AFTER, EXCEPT TD-698		

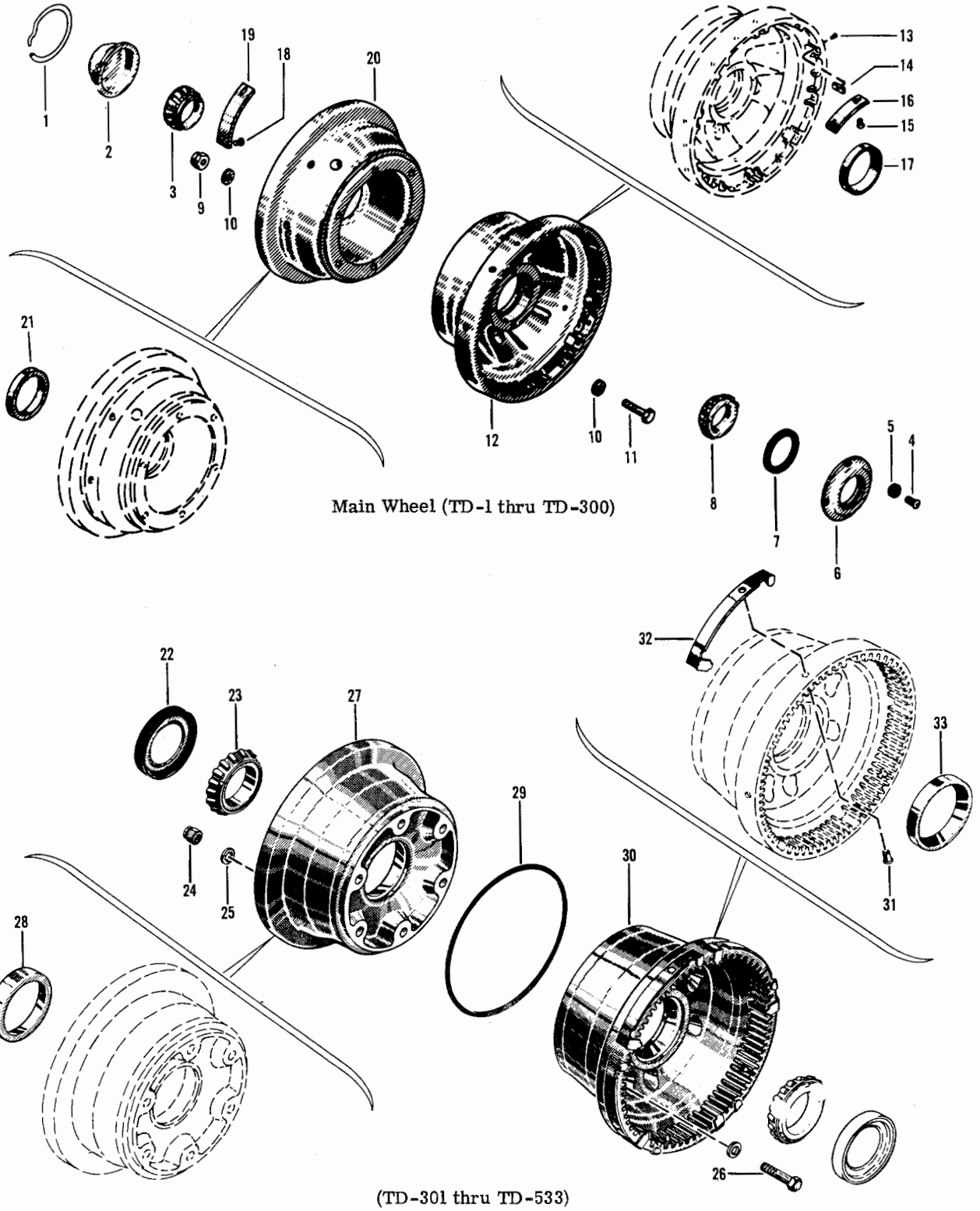

Figure 37A. Main Wheel (TD-1 thru TD-533)

FIG. & INDEX NO.	PART NO.	DESCRIPTION 1 2 3 4 5 6 7	UNITS PER ASSY	USABLE ON CODE
37A	95-31711	MAIN WHEEL ASSY,6.50X8 TUBE TYPE. . . . . /ORDER 95-31319/	NP	1
	95-32135	MAIN WHEEL ASSY,6.50X8 TUBELESS,SIDEWALL VALVE. /ORDER 96-300001-3/	NP	2
- 1	¤95-10837	. RING,RETAINING.	1	1
- 2	¤95-3295	. CAP,HUB	1	1
- 3	¤13889	. CONE,BEARING.	1	3
- 4	AN526-1032-5	. SCREW	4	1
- 5	¤AN960PD10L	. WASHER.	4	1
- 6	¤95-3305	. RING,BEARING CLOSURE.	1	1
- 7	¤95-3298	. RING,FELT SEAL.	1	1
- 8	¤13889	. CONE,BEARING.	1	3
- 9	¤MS20365-524	. NUT,SELF-LOCKING /SUPERSEDES AN365-524/ . . .	6	1
- 10	¤AN960-516L	. WASHER.	12	1
- 11	¤AN5-14A/M/	. BOLT.	6	1
- 12	¤95-21522	. WHEEL SUBASSY,INBOARD	1	1
- 13	¤95-20656	. . SCREW,DISC KEY.	10	1
- 14	¤95-11084	. . KEY,DISC DRIVE.	10	1
- 15	AN535-0-3	. . SCREW,DRIVE	2	1
- 16	95-21528	. . PLATE,DATA.	1	1
- 17	¤13830	. . CUP,BEARING	1	1
- 18	AN535-0-3	. SCREW,DRIVE	2	1
- 19	95-23546	. PLATE,DATA.	1	1
- 20	95-21521	. WHEEL SUBASSY,OUTBOARD.	1	1
- 21	¤13830	. . CUP,BEARING	1	1
- 22	¤95-24218	. SEAL,BEARING.	2	2
- 23	¤13889	. CONE,BEARING.	2	3
- 24	¤32FF524	. NUT	6	2
- 25	¤AN960-516	. WASHER.	12	2
- 26	¤AN5-13A/M/	. BOLT.	6	2
- 27	95-24232	. WHEEL SUBASSY,OUTBOARD. . . . . /ORDER 96-300001-13/	NP	2
- 28	¤13830	. . CUP,BEARING	1	2
- 29	¤AN6230B37	. SEAL,WHEEL O RING	1	2
- 30	¤95-24231	. WHEEL SUBASSY,INBOARD	1	2
- 31	¤MS20426DD6-6	. . RIVET	5	2
- 32	¤95-32954	. . CLIP,DISC	5	2
- 33	¤13830	. . CUP,BEARING	1	2

CODE	EFFECTIVITY	CODE	EFFECTIVITY
1	TD-1 THRU TD-300	2	TD-301 THRU TD-533
3	TD-1 THRU TD-533		

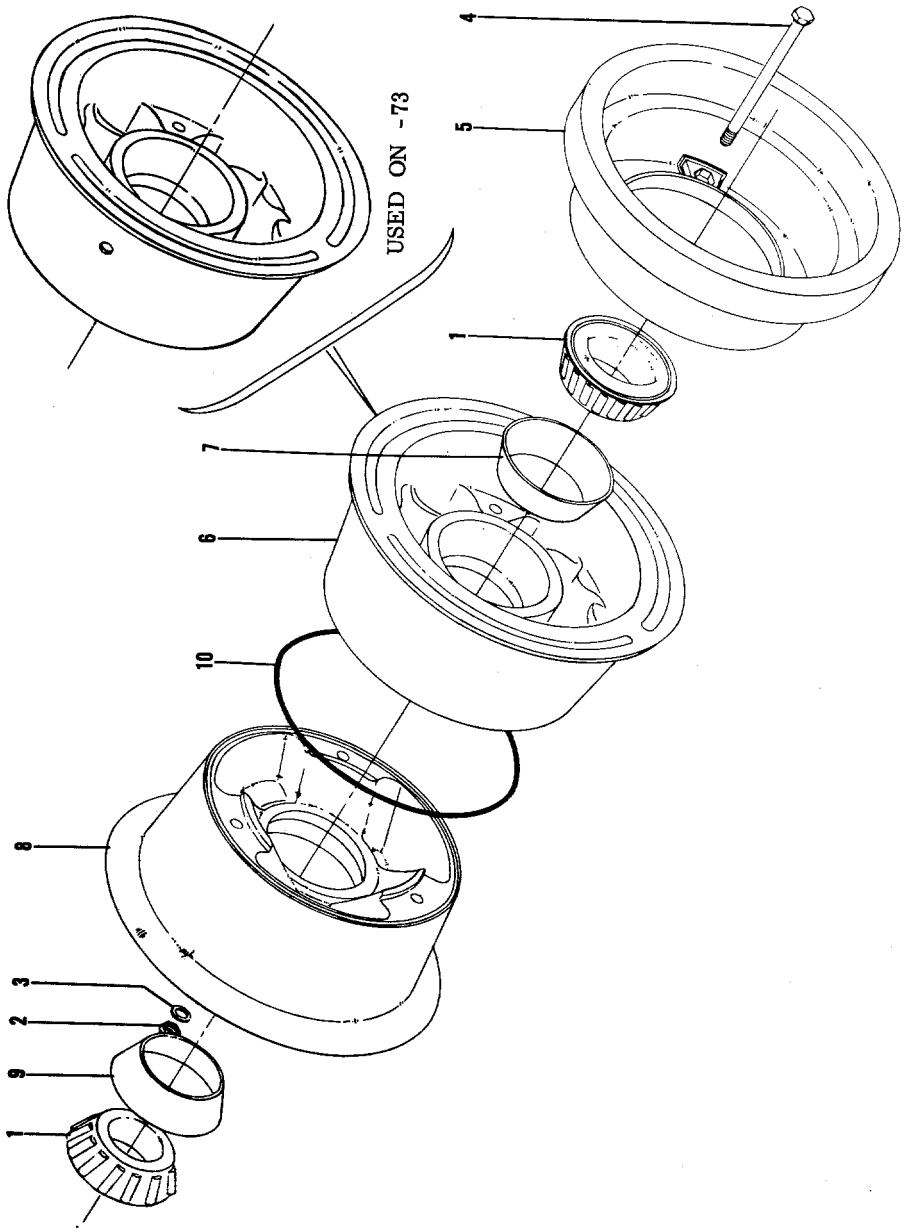

Figure 37B. Main Wheel (TD-534 thru TD-690 and TD-694)

MODEL 95 PARTS CATALOG

FIG. & INDEX NO.	PART NO.	DESCRIPTION 1 2 3 4 5 6 7	UNITS PER ASSY	USABLE ON CODE
37B	95-300001-1	MAIN WHEEL ASSY,TUBELESS SIDEWALL INFLATED. . . /SAND CAST WHEEL/ /ORDER 95-300001-67/	NP	1
	¤95-300001-67	MAIN WHEEL ASSY,TUBELESS SIDEWALL INFLATED. . . /DIE CAST WHEEL/	2	1
	¤95-300001-73	MAIN WHEEL ASSY,TUBE TYPE	2	2
- 1	¤13685XL	. CONE,BEARING /USED WITH 95-300001-1/.	2	1
	¤13889	. CONE,BEARING /USED WITH 95-300001-67 & -73/ .	2	
- 2	AN363-524	. NUT	3	3
- 3	¤AN960-516	. WASHER /USED WITH 95-300001-1/.	3	1
	MS20002-5	. WASHER /USED WITH 95-300001-67 & -73/	3	3
- 4	¤GYS5-49	. BOLT.	3	3
- 5	¤95-300001-3	. RING SUBASSY,DISC	1	3
- 6	95-300001-11	. WHEEL SUBASSY,INBD HALF . . . . . /USED WITH 95-300001-1/ /ORDER 95-300001-69/	NP	1
	95-300001-69	. WHEEL SUBASSY,INBD HALF . . . . . /USED WITH 95-300001-67 & -73/	1	3
- 7	¤13621XL	. . BEARING,CUP /USED WITH 95-300001-1/	1	1
	¤13830	. . BEARING,CUP /USED WITH 95-300001-67 & -73/.	1	3
- 8	¤95-300001-13	. WHEEL SUBASSY,OUTBD HALF. . . . . /USED WITH 95-300001-1/	1	1
	¤95-300001-71	. WHEEL SUBASSY,OUTBD HALF. . . . . /USED WITH 95-300001-67/	1	1
	¤95-300001-79	. WHEEL SUBASSY,OUTBD HALF. . . . . /USED WITH 95-300001-73/	1	2
- 9	¤13621XL	. . BEARING,CUP /USED WITH 95-300001-1/	1	1
	¤13830	. . BEARING CUP /USED WITH 95-300001-67 & -73/.	1	3
- 10	AN6230B30	. SEAL,WHEEL O RING /USED WITH 95-300001-1/ . .	1	1
	¤AN6230B29	. SEAL,WHEEL O RING /USED WITH 95-300001-67/. .	1	1
	95-300001-29	. DATA PLATE,OUTBD WHEEL.	1	3
	95-300001-31	. DATA PLATE,WARNING.	1	3
	95-300001-33	. DATA PLATE,BEECHCRAFT	1	1
	95-300001-83	. DATA PLATE,BEECHCRAFT	1	2

CODE	EFFECTIVITY	CODE	EFFECTIVITY
1	TD-534 THRU TD-602	2	TD-603 THRU TD-690 AND TD-694
3	TD-534 THRU TD-690 AND TD-694		

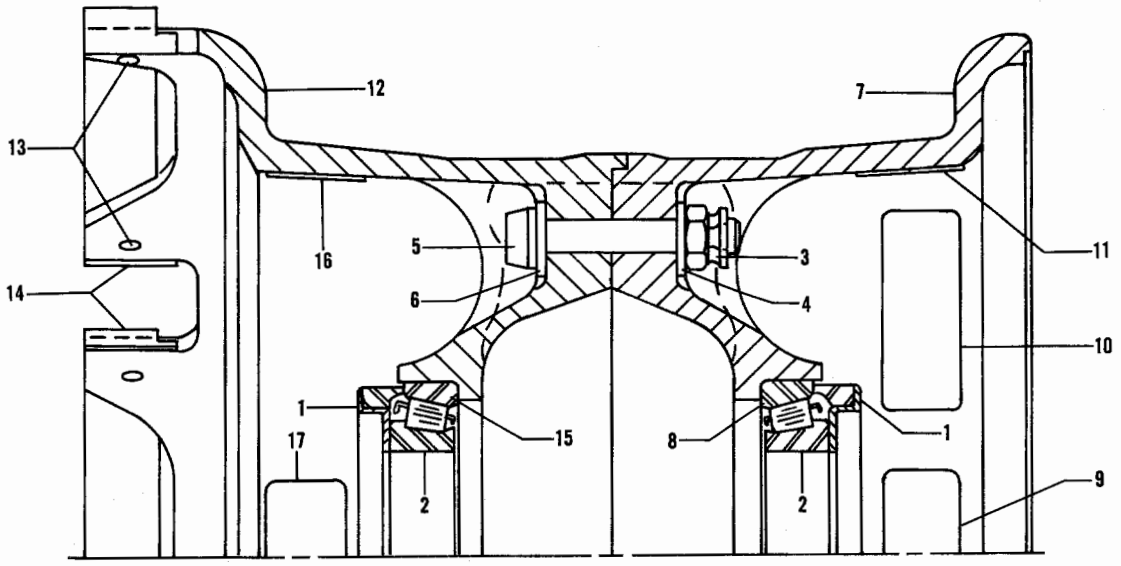

Figure 37C. Main Wheel (TD-691 and After Except TD-694)

FIG. & INDEX NO.	PART NO.	DESCRIPTION 1 2 3 4 5 6 7	UNITS PER ASSY	USABLE ON CODE
37C	35-8002-3	WHEEL ASSY,700X6 TUBE TYPE.	2	1
- 1	¤95-24218	. SEAL,BEARING.	2	1
- 2	¤1388976	. CONE,BEARING /SUPERSEDES 95-0476/	2	1
- 3	¤95-6867	. NUT	4	1
- 4	95-6974	. WASHER.	4	1
- 5	95-8249	. BOLT,WHEEL.	4	1
- 6	95-6926	. WASHER,COUNTERSUNK.	4	1
- 7	35-8002-9	. WHEEL SUBASSY,OUTBD HALF.	1	1
- 8	¤13830	. . CUP,BEARING /SUPERSEDES 95-0477/.	1	1
- 9	95-35523	. . DATA PLATE,OUTBD WHEEL HALF	1	1
- 10	95-300001-31	. . DATA PLATE,WARNING /SUPERSEDES 95-25546/. .	1	1
- 11	95-35576	. . DATA PLATE,BEECHCRAFT	1	1
- 12	35-8002-7	. WHEEL SUBASSY,INBD HALF	1	1
- 13	95-7649	. . RIVET	12	1
- 14	95-43686	. . LINER,KEYWAY.	6	1
- 15	¤13830	. . CUP,BEARING /SUPERSEDES 95-0477/.	1	1
- 16	95-35522	. . DATA PLATE,INBD WHEEL HALF.	1	1
- 17	95-300001-31	. . DATA PLATE,WARNING /SUPERSEDES 95-25546/. .	1	1

CODE EFFECTIVITY

1 TD-691 AND AFTER
EXCEPT TD-694

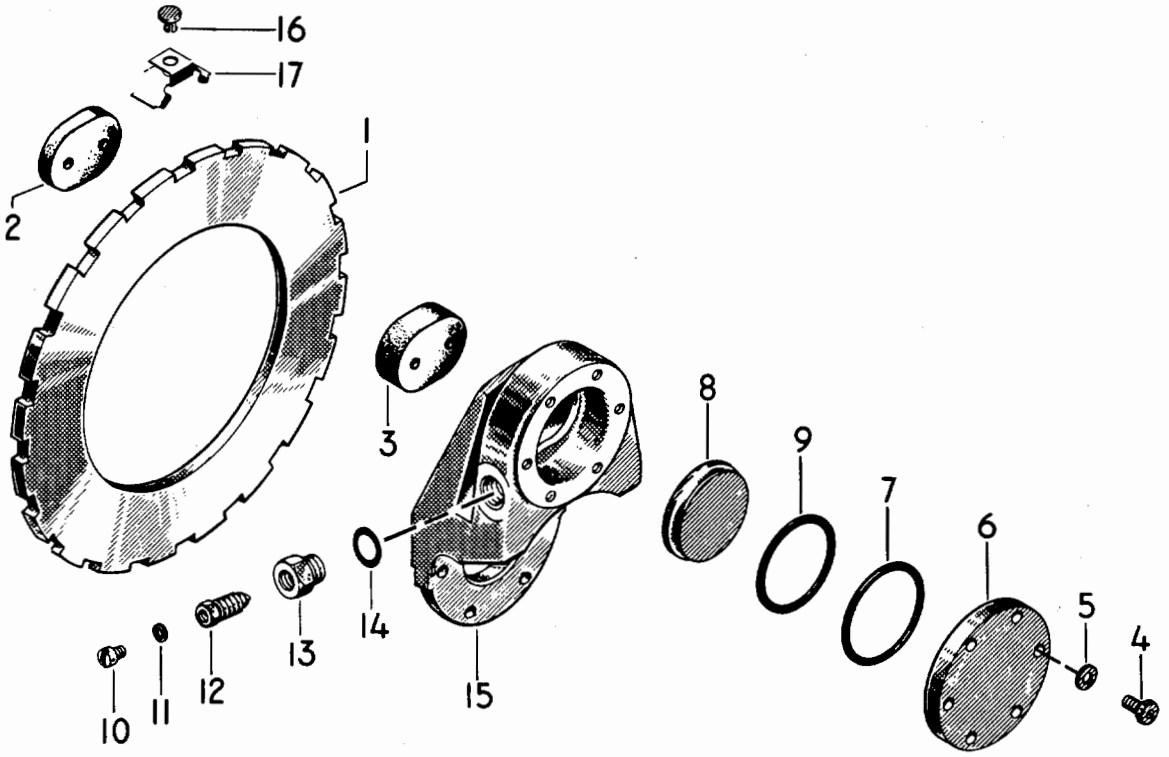

Figure 37D. Brake (TD-1 thru TD-300)

FIG. & INDEX NO.	PART NO.	DESCRIPTION 1 2 3 4 5 6 7	UNITS PER ASSY	USABLE ON CODE
37D-	95-31712	BRAKE ASSY,BOLTED CYLINDER HEAD /SEE FIG. 36A & 37 FOR NHA/	1	1
- 1	95-30468	DISC	1	1
- 2	95-10716	LINING,ANVIL	1	1
- 3	95-10715	LINING,PISTON	1	1
- 4	AN73-A6	BOLT,CYLINDER HEAD	6	1
- 5	AN960-10	WASHER	6	1
- 6	95-31719	HEAD,CYLINDER	1	1
- 7	AN6230-B3	SEAL,CYLINDER HEAD O RING	1	1
- 8	95-23545	PISTON	1	1
- 9	AN6230-B2	SEAL,PISTON O RING	1	1
- 10	AN501A10-4	SCREW,BLEEDER	1	1
- 11	95-4486	WASHER,PLAIN	1	1
- 12	95-5204	VALVE,BLEEDER	1	1
- 13	95-22134	ADAPTER,BLEEDER	1	1
- 14	AN6290-6	GASKET,BLEEDER ADAPTER	1	1
- 15	95-31159	HOUSING,BRAKE	1	1
- 16	95-5383	FASTENER,DOT	5	1
- 17	95-23937	CLIP,DISC	5	1
	115	RELEASE ASSY,CAGLE BRAKE /KIT 95-814/	1	1

CODE EFFECTIVITY

1 TD-1 THRU TD-300

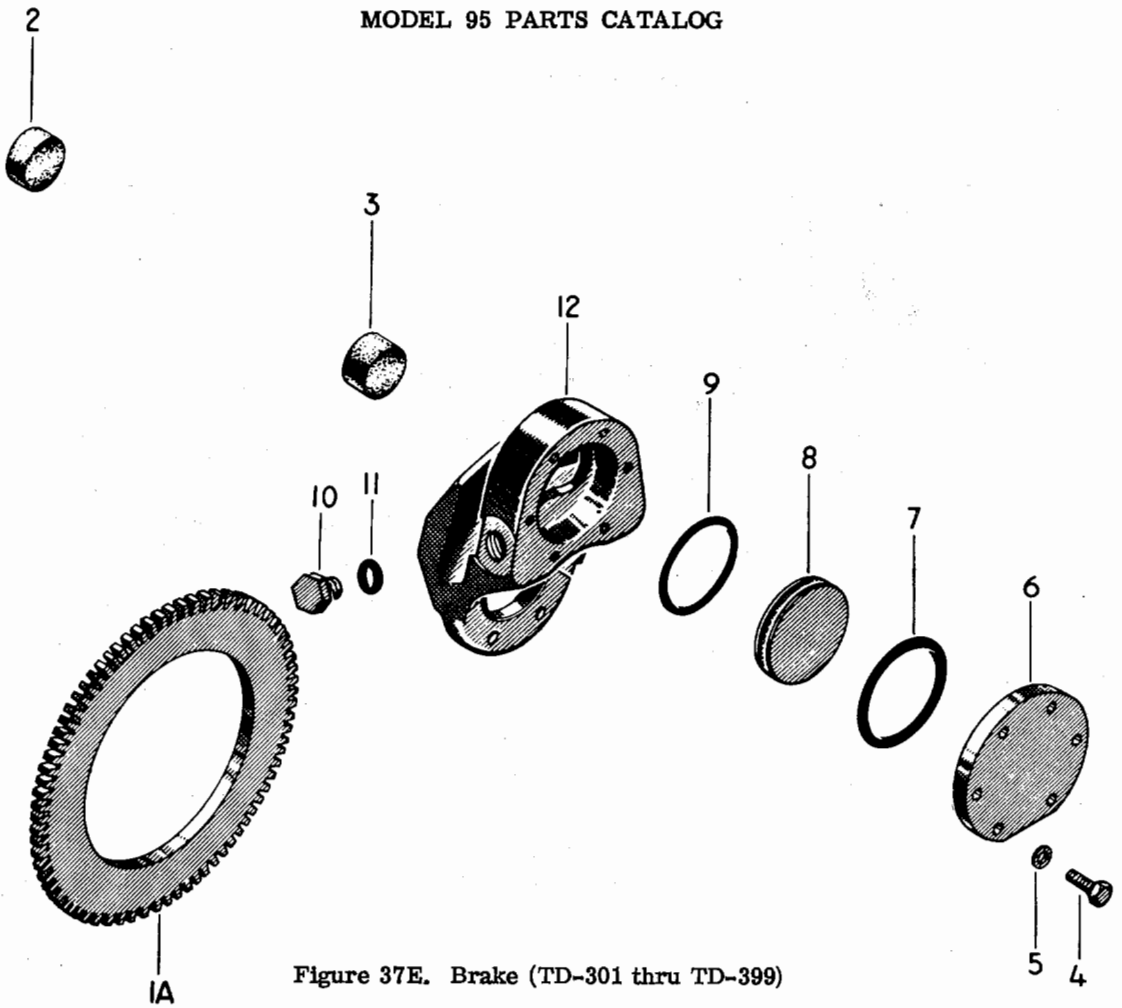

Figure 37E. Brake (TD-301 thru TD-399)

FIG. & INDEX NO.	PART NO.	DESCRIPTION 1 2 3 4 5 6 7	UNITS PER ASSY	USABLE ON CODE
37E-	95-32167	BRAKE ASSY,BOLTED CYLINDER HEAD /SEE FIG. 36A FOR NHA/	1	1
- 1A	95-32166	DISC,BRAKE	1	1
- 2	95-10716	LINING,ANVIL	1	1
- 3	95-10715	LINING,PISTON	1	1
- 4	NK-73A-6	BOLT	6	1
- 5	AN960-10	WASHER	6	1
- 6	95-24303	HEAD,CYLINDER	1	1
- 7	AN6230-B3	SEAL,CYLINDER HEAD O RING	1	1
- 8	95-24223	PISTON	1	1
- 9	AN6230-B2	SEAL,PISTON O RING	1	1
- 10	95-22134	ADAPTER,BLEEDER	1	1
- 11	AN6290-6	GASKET,BLEEDER	2	1
- 12	95-41442	HOUSING,BRAKE	1	1
	95-5204	VALVE,BLEEDER	1	1
	95-4486	WASHER,BLEEDER VALVE	1	1
	AN501A10-4	SCREW,BLEEDER	1	1
	115	RELEASE ASSY,CAGLE BRAKE	1	1

CODE EFFECTIVITY

1 TD-301 THRU TD-399

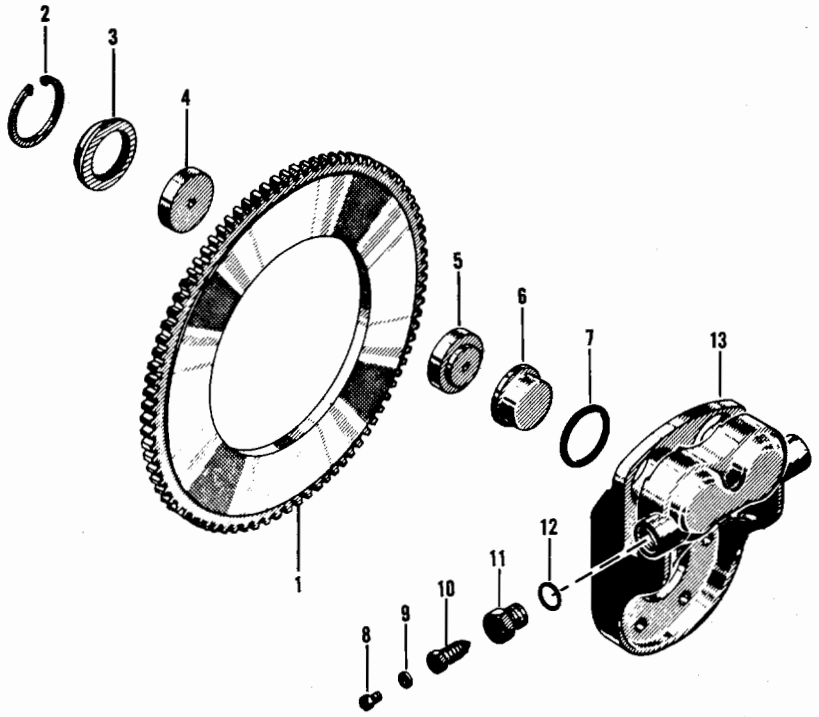

Figure 37F. Brake (TD-400 thru TD-533)

FIG. & INDEX NO.	PART NO.	DESCRIPTION 1 2 3 4 5 6 7	UNITS PER ASSY	USABLE ON CODE
37F	¤95-32412	BRAKE ASSY,DUAL CAVITY.	2	1
	¤95-32679	BRAKE ASSY,DUAL CAVITY.	2	2
- 1	¤95-32166	. DISC.	1	1
	¤95-32684	. DISC.	1	2
- 2	¤95-8072	. RING,RETAINING.	2	3
		. CARRIER,LINING.		2
- 4	¤95-24805	. LINING,ANVIL.	2	1
	¤95-26275	. LINING,ANVIL /SUPERSEDES 95-25132/.	2	2
- 5	¤95-24804	. LINING,PISTON	2	1
	¤95-26274	. LINING,PISTON /SUPERSEDES 95-25133/	2	2
- 6	¤95-24834	. PISTON.	2	3
- 7	¤AN6227B23	. SEAL,PISTON O RING.	2	3
- 8	¤AN501A10-4	. SCREW,BLEEDER	1	3
- 9	¤96-300001-41	. WASHER,PLAIN /SUPERSEDES 95-4486/	1	3
- 10	¤95-5204	. VALVE,BLEEDER	1	3
- 11	¤50-300013-37	. ADAPTER,BLEEDER /SUPERSEDES 95-22134/	1	3
- 12	¤AN6290-6	. GASKET,INLET AND BLEEDER.	2	1
	¤MS28778-6	. GASKET,INLET AND BLEEDER.	2	2
- 13	¤95-41589	. HOUSING,BRAKE	1	3

CODE	EFFECTIVITY	CODE	EFFECTIVITY
1	TD-400 THRU TD-458	2	TD-459 THRU TD-533
3	TD-400 THRU TD-533		

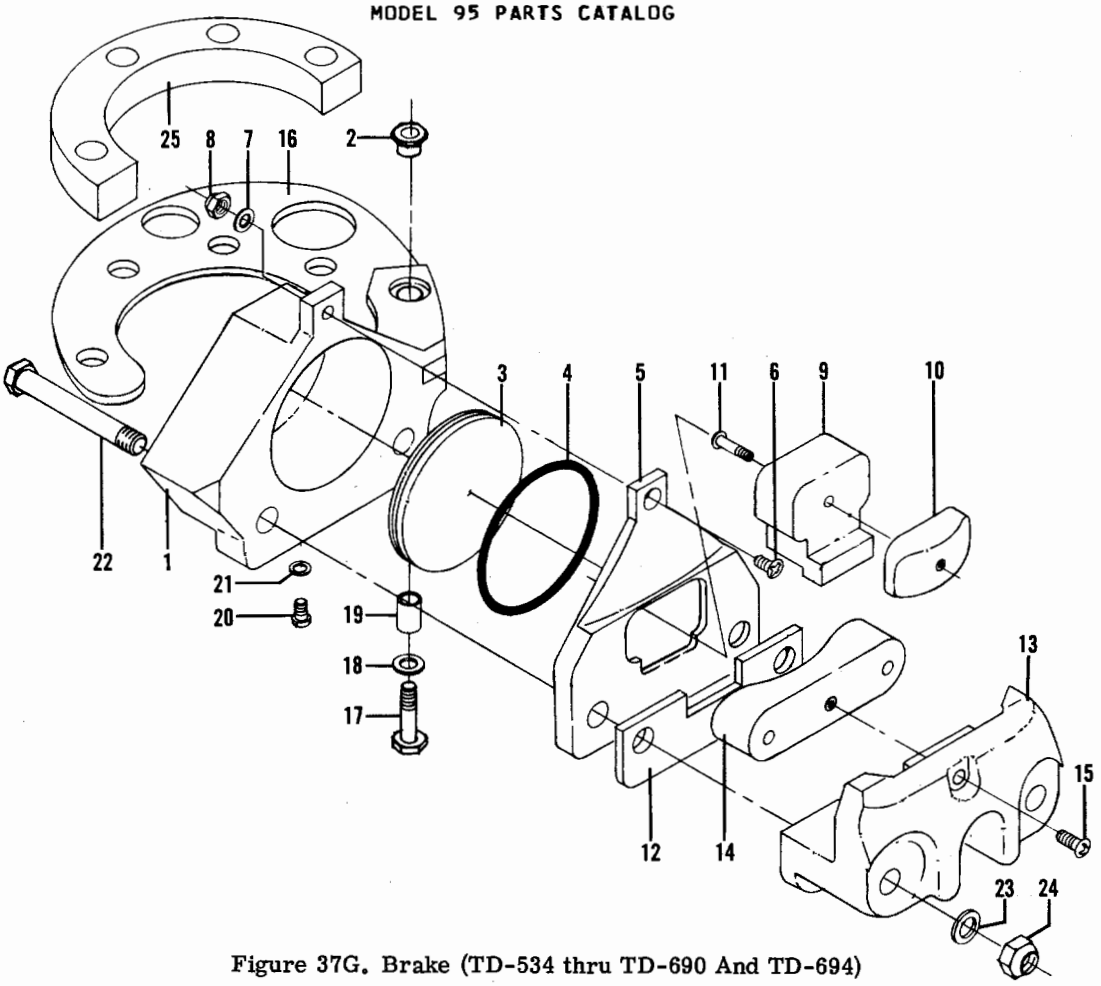

Figure 37G. Brake (TD-534 thru TD-690 And TD-694)

FIG. & INDEX NO.	PART NO.	DESCRIPTION 1 2 3 4 5 6 7	UNITS PER ASSY	USABLE ON CODE
37G	95-300001-5	BRAKE ASSY,RING DISC LH	1	1
	¤95-300001-6	BRAKE ASSY,RING DISC RH	1	1
	¤95-300001-15	. HOUSING SUBASSY,BRAKE LH.	1	1
	¤95-300001-16	. HOUSING SUBASSY,BRAKE RH.	1	1
- 1	95-300001-37	. . HOUSING,BRAKE LH. /ORDER 95-300001-15/	NP	1
	95-300001-38	. . HOUSING,BRAKE RH. /ORDER 95-300001-16/	NP	1
- 2	¤95-300001-39	. . BUSHING,THREADED.	1	1
- 3	¤95-300001-41	. PISTON.	1	1
- 4	¤AN6227B27	. SEAL,PISTON O RING.	1	1
- 5	¤95-300001-43	. GUIDE,LINING.	1	1
- 6	¤10-32NF2X3/4	. SCREW,SOCKET /82 DEGREE FLAT HEAD/.	1	2
- 7	¤96-300001-41	. WASHER.	1	1
- 8	AN363-1032	. NUT,GUIDE SCREW	1	1
	95-300001-9XS	. LINING SUBASSY,PISTON	NP	1
- 9	¤95-300001-49	. . CARRIER,LINING.	1	1
- 10	¤95-300001-45	. . LINING,MOLDED	1	1
- 11	¤10-24X1/2	. . SCREW,ROUND HEAD SELF TAPPING	1	1
- 12	¤95-300001-51	. SPACER,BACKPLATE.	1	1
	95-300001-17	. BACKPLATE SUBASSY,ANVIL	1	1
- 13	¤95-300001-53	. . BACKPLATE,ANVIL	1	1
- 14	¤95-300001-77	. . LINING /SUPERSEDES 95-300001-7/	1	1
- 15	¤10-32NF2X5/16	. . SCREW,ROUND HEAD BRASS.	1	1
- 16	¤95-300001-57	. TORQUE ARM,HOUSING.	1	1
- 17	¤AN5H5A/M/	. BOLT,HINGE.	1	1
- 18	¤AN960-516L	. WASHER.	1	1
- 19	¤95-300001-59	. SLEEVE,HINGE BOLT	1	1

FIG. & INDEX NO.	PART NO.	1 2 3 4 5 6 7 DESCRIPTION	UNITS PER ASSY	USABLE ON CODE
37G- 20	¤AN502-10-4	. SCREW,BLEEDER	1	1
- 21	¤96-300001-41	. WASHER.	1	1
- 22	¤AN6H26A/M/	. BOLT.	2	1
- 23	¤AN960-616	. WASHER.	4	1
- 24	AN363-624	. NUT	2	1
- 25	¤95-300001-61	. SPACER,TORQUE ARM	1	1
	95-300001-63	. DATA PLATE,LH	1	1
	95-300001-64	. DATA PLATE,RH	1	1
	95-300001-65	. DATA PLATE,SERIAL	1	1

CODE	EFFECTIVITY	CODE	EFFECTIVITY
1	TD-534 THRU TD-690 AND TD-694	2	TD-534 THRU TD-608

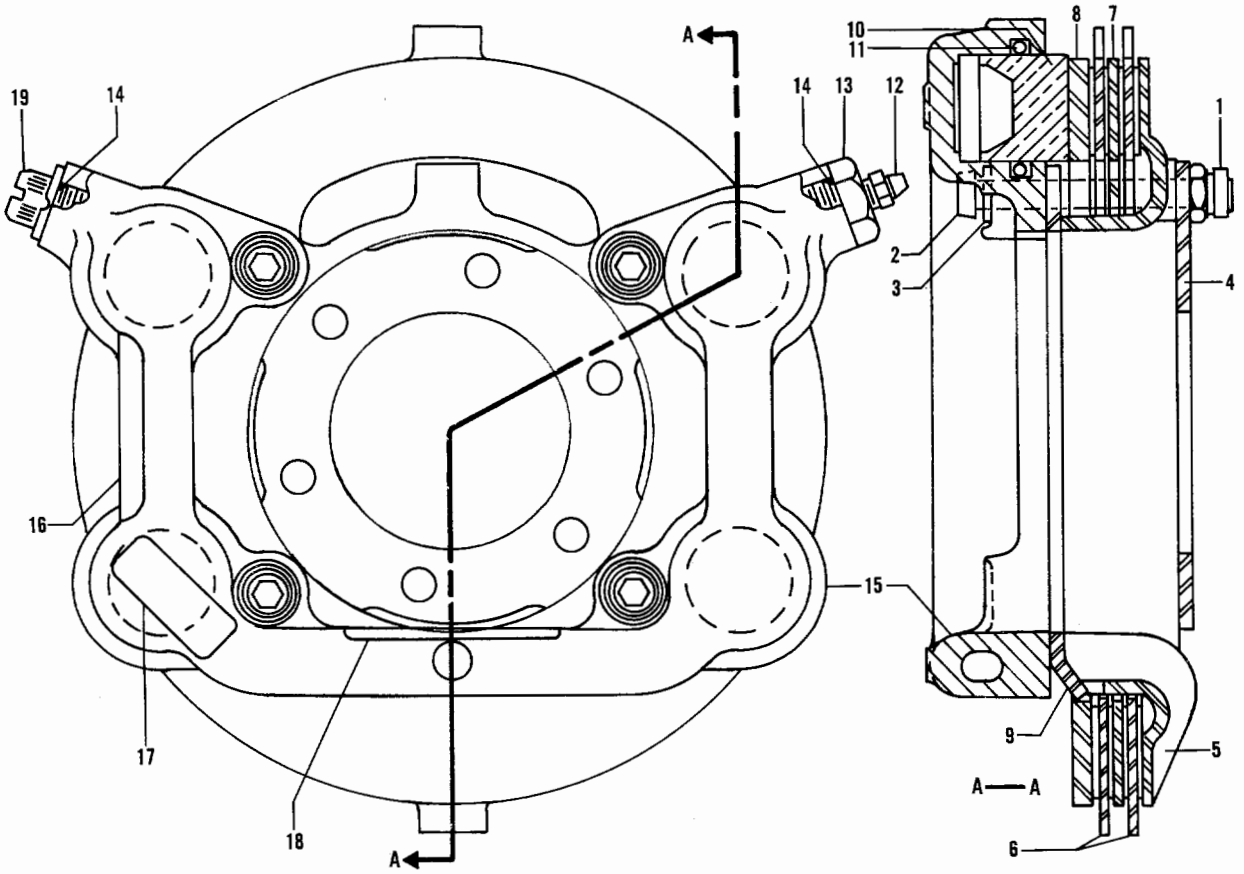

Figure 37H. Brake (TD-691 thru TD-698 Except TD-694 And TD-697)

FIG. & INDEX NO.	PART NO.	DESCRIPTION 1 2 3 4 5 6 7	UNITS PER ASSY	USABLE ON CODE
37H	¤35-8002-5	BRAKE ASSEMBLY.	2	1
- 1	¤95-6867	. NUT,SELFLOCKING	4	1
- 2	¤95-9491	. BOLT,INTERNAL WRENCHING	4	1
- 3	95-9626	. WASHER,COUNTERSUNK.	4	1
- 4	¤95-35451	. FLANGE,TORQUE	1	1
- 5	¤35-8002-13	. PLATE,BACK.	1	1
- 6	¤35-8002-15	. DISC ROTATING	2	1
- 7	¤35-8002-17	. DISC,STATIONARY	1	1
- 8	¤35-8002-19	. PLATE,PRESSURE.	1	1
- 9	¤95-35454	. PLATE,TORQUE.	1	1
- 10	¤95-35452	. PISTON.	4	1
- 11	95-4719	. PACKING O RING.	4	1
- 12	¤95-9279	. VALVE,BLEEDER	1	1
- 13	¤95-3218	. ADAPTOR,BLEEDER VALVE	1	1
- 14	95-5761	. PACKING,O RING.	2	1
- 15	35-8002-11	. HOUSING,BRAKE	1	1
- 16	¤95-35577	. DATA PLATE,BEECHCRAFT	1	1
- 17	¤95-35625	. DATA PLATE,TORQUE	1	1
- 18	95-300001-64	. DATA PLATE,SERIAL /SUPERSEDES 95-25556/ . . .	1	1
- 19	95-1989	. PLUG,STORAGE AND SHIPPING	1	1

CODE EFFECTIVITY

1 TD-691 THRU TD-698
EXCEPT TD-694 & 697

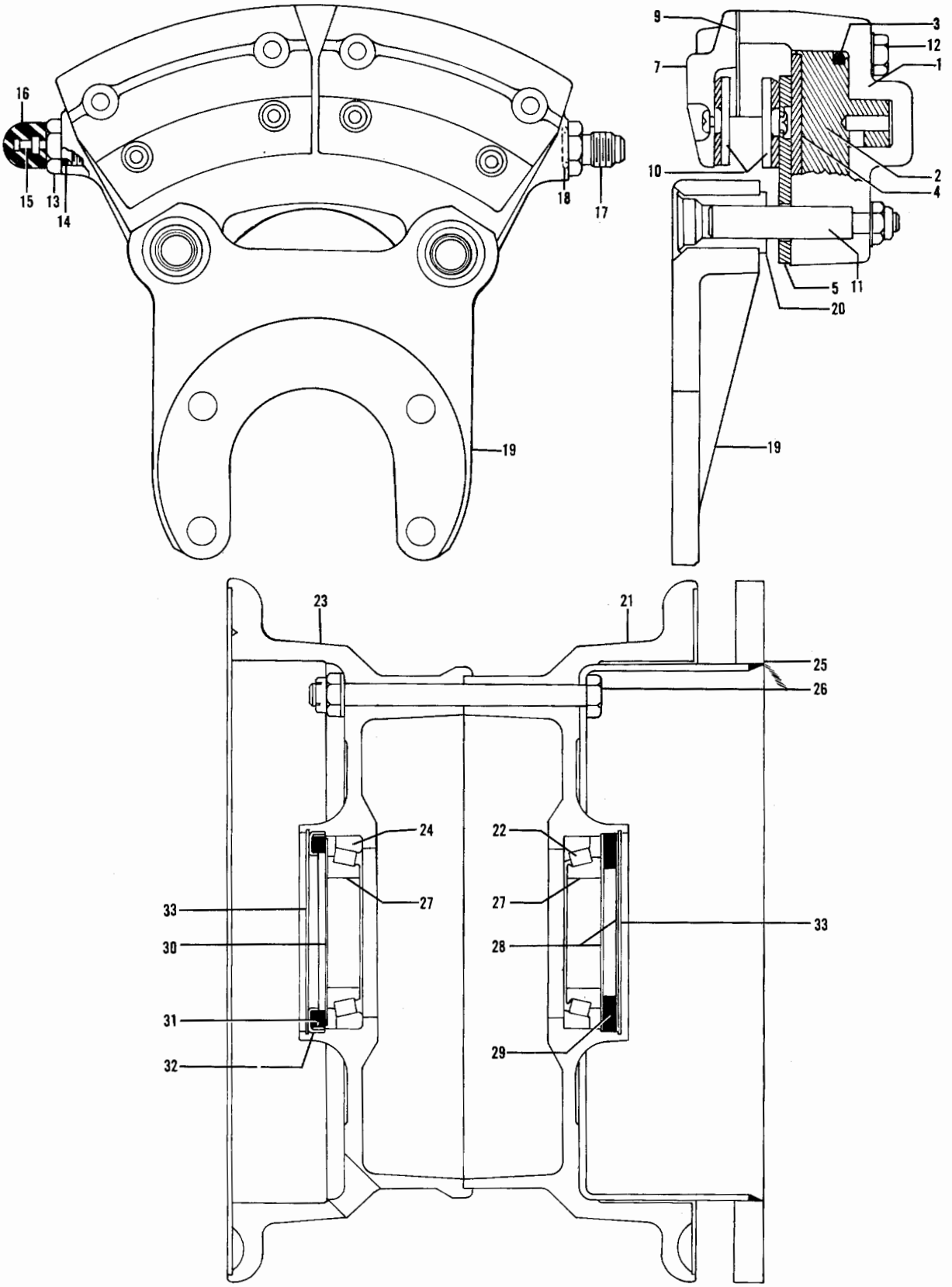

Figure 37I. Brake (TD-697 And After Except TD-698)

FIG. & INDEX NO.	PART NO.	DESCRIPTION 1 2 3 4 5 6 7	UNITS PER ASSY	USABLE ON CODE
37I-	¤30-66	BRAKE ASSY.	1	1
	¤91-27	. CYLINDER ASSY	1	1
- 1	¤61-22	. . CYLINDER.	1	1
	¤92-18	. . PISTON ASSY	2	1
- 2	62-17	. . . PISTON.	1	1
- 3	¤AN6227B27	. . . O RING.	1	1
- 4	¤88-1	. . . INSULATOR	1	1
- 5	¤73-13	. . PLATE ASSY,PRESSURE	1	1
- 6		. . DELETED		
- 7	¤74-12	. . PLATE ASSY,BACK	2	1
- 8		. . DELETED		
- 9	¤68-17	. . SHIM,BACK PLATE	1	1
- 10	¤66-22	. . LINING.	4	1
- 11	¤69-4	. . BOLT,ANCHOR	2	1
	¤AN960-416L	. . WASHER.	2	1
	¤MS20365-428	. . NUT /SUPERSEDES AN365-428/.	2	1
- 12	¤LP4-17AM	. . BOLT.	4	1
	¤AN960-416L	. . WASHER.	4	1
- 13	¤81-2	. . SEAT,BLEEDER.	1	1
- 14	¤AN6227B7	. . O RING.	1	1
- 15	95-9279	. . SCREW,BLEEDER	1	1
- 16	¤183-1	. . CAP,BLEEDER	1	1
- 17	¤AN815-4D	. . FITTING,TUBE.	1	1
- 18	¤AN6227B7	. . O RING.	1	1
	¤75-40	. PLATE ASSY,TORQUE	1	1
- 19	65-30	. . PLATE,TORQUE.	1	1
- 20	145-20	. . BUSHING	2	1
	¤40-98	WHEEL ASSY.	1	1
	¤161-23	. WHEEL HALF ASSY,INNER	1	1
- 21	151-19	. . WHEEL HALF,INNER.	1	1
- 22	¤13836	. . CUP,BEARING	1	1
	¤162-21	. WHEEL HALF ASSY,OUTER	1	1
- 23	152-17	. . WHEEL HALF,OUTER.	1	1
- 24	¤13836	. . CUP,BEARING	1	1
- 25	¤164-27	. DISC ASSY,BRAKE	1	1
- 26	AN5-35A	. BOLT.	6	1
	¤AN960-516	. WASHER.	6	1
	¤MS20365-524	. NUT	6	1
- 27	¤13889	. CONE,BEARING.	2	1
- 28	¤153-9	. RING,GREASE SEAL.	2	1
- 29	¤154-14	. FELT,GREASE SEAL.	1	1
- 30	¤A39070	. RING,GREASE SEAL.	1	1
- 31	¤154-13	. FELT,GREASE SEAL.	1	1
- 32	¤153-15	. RING,GREASE SEAL.	1	1
- 33	¤3023	. RING,SNAP	2	1

CODE EFFECTIVITY

1 TD-697 AND AFTER
EXCEPT TD-698

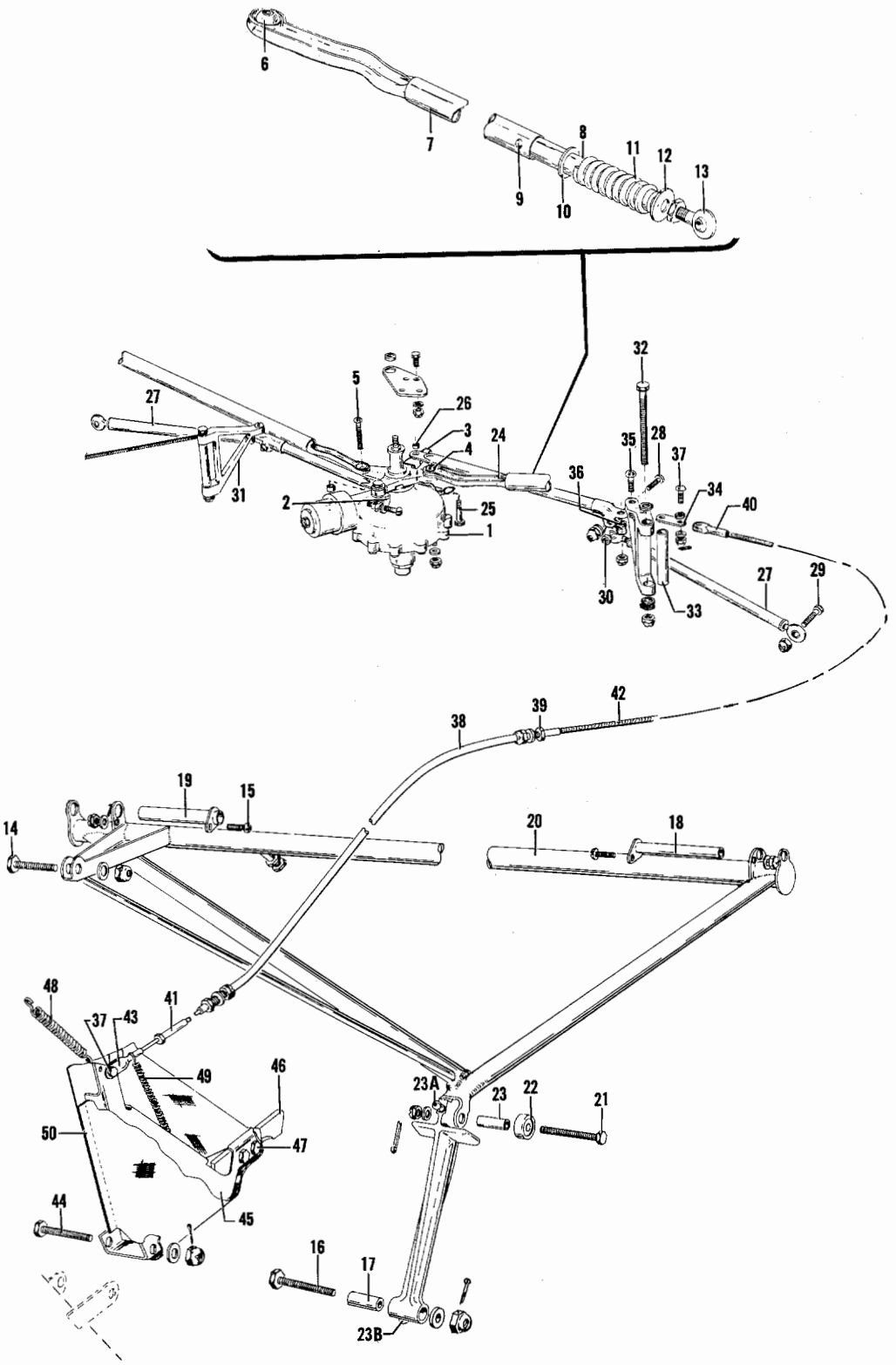

Figure 38. Landing Gear Retract Mechanism

FIG. & INDEX NO.	PART NO.	DESCRIPTION 1 2 3 4 5 6 7	UNITS PER ASSY	USABLE ON CODE
		MECHANISM INSTL,LANDING GEAR RETRACT.		
38 - 1	95-810017	. ACTUATOR ASSY,LANDING GEAR RETRACT.	1	1
		/SEE FIG. 39/		
	95-810017-7	. ACTUATOR ASSY,LANDING GEAR RETRACT.	1	2
		/SEE FIG. 39/		
- 2	35-364127	. SWITCH ACTUATOR,LANDING GEAR.	1	
- 3	35-364130	. ACTUATOR ASSY,LANDING GEAR SWITCH	1	
	35-815125-2	. ROD ASSY,MAIN GEAR RETRACT LH	1	
	35-815125-4	. ROD ASSY,MAIN GEAR RETRACT RH	1	
		/ATTACHING PARTS/		
- 4	AN26-23	. BOLT.	1	
- 5	AN6-11A	. BOLT.	1	
	AN960-616	. WASHER.	3	
	AN320-6	. NUT	1	
	AN365-624	. NUT	1	
	AN380-3-2	. PIN,COTTER.	1	
		----*----		
- 6	LS6	. . BEARING	1	
- 7	35-815125-602	. . BRAZE ASSY,ROD LH /SPARE ASSY/.	1	
		. . BRAZE ASSY,ROD LH		
	35-815125-604	. . BRAZE ASSY,ROD RH /SPARE ASSY/.	1	
		. . BRAZE ASSY,ROD RH		
- 8	35-815131	. . PLUNGER ASSY.	1	
		/ATTACHING PARTS/		
- 9	AN394-33	. . PIN	1	
	AN960D416L	. . WASHER.	1	
	AN380-2-2	. . PIN,COTTER.	1	
		----*----		
- 10	100951S063XP	. . WASHER.	4	
- 11	45-815091	. . SPRING.	1	
- 12	100951S063YU	. . WASHER.	1	
- 13	HM6	. . END,LANDING GEAR RETRACT ROD.	1	
	AN316-6R	. . NUT	1	
	35-815155-611	. BRACE ASSY,MAIN LANDING GEAR RETRACT LH . . .	1	
		/SUPERCEDES 35-815155 SA2/		
		/SPARE ASSY,SEE SECTION 4 FOR COMPONENTS/		
		. BRACE ASSY,MAIN LANDING GEAR RETRACT LH . . .		
	35-815155-611	. BRACE ASSY,MAIN LANDING GEAR RETRACT RH . . .	1	
		/SUPERCEDES 35-815155 SA3/		
		/SPARE ASSY,SEE SECTION 4 FOR COMPONENTS/		
		. BRACE ASSY,MAIN LANDING GEAR RETRACT RH . . .		
		/ATTACHING PARTS/		
- 14	AN6-11A	. BOLT.	1	
	AN960-616	. WASHER.	1	
	AN365-624	. NUT	1	
- 15	AN515-8-8	. SCREW	1	
	AN960-8	. WASHER.	2	
	AN365-832	. NUT	2	
- 16	AN5-22	. BOLT.	1	
	AN960-516	. WASHER.	1	
- 17	35-815124	. BUSHING,RETRACT BRACE	1	
	AN310-5	. NUT	1	
		----*----		
- 18	35-815123-10	. . PIN ASSY,LANDING GEAR RETRACT BRACE FWD . .	1	
- 19	35-815120	. . PIN ASSY,LANDING GEAR RETRACT BRACE AFT . .	1	
- 20	35-815155-610	. . BRACE ASSY,MAIN LANDING GEAR LH	1	
		/SUPERCEDES 35-815102-20/SPARE		
		ASSY,SEE SECTION 4 FOR COMPONENTS/		
		. . BRACE ASSY,MAIN LANDING GEAR LH		
	35-815155-611	. . BRACE ASSY,MAIN LANDING GEAR RH	1	
		/SUPERCEDES 35-815102-21/		
		/SPARE ASSY,SEE SECT. 4 FOR COMPONENTS/		
		. . BRACE ASSY,MAIN LANDING GEAR RH		
	35-815155-611	. . LEG ASSY,RETRACT BRACE.	1	
		/SUPERCEDES 35-815129/		
		/ATTACHING PARTS/		
- 21	NAS464-5-23/M/	. . BOLT.	1	
- 22	NAS505-5J	. . BEARING	1	
- 23	35-810122	. . BUSHING	1	
	AN960-516L	. . WASHER.	1	
	AN320-5/M/	. . NUT	1	
	AN380-2-2	. . PIN,COTTER.	1	
		----*----		

FIG. & INDEX NO.	PART NO.	DESCRIPTION 1 2 3 4 5 6 7	UNITS PER ASSY	USABLE ON CODE
38 - 23A	1729	. . FITTING,LUBRICATION	1	
- 23B	AN286-1	. . FITTING,LUBRICATION /SUPERCEDES MS15001-2/.	1	
- 24	45-815003-3	. ROD ASSY,LANDING GEAR DOOR ACTUATOR LH. . . .	1	
	45-815003-1	. ROD ASSY,LANDING GEAR DOOR ACTUATOR RH. . . .	1	
		/ATTACHING PARTS/		
- 25	AN4-10	. BOLT.	1	
	AN960-416	. WASHER.	2	
- 26	35-815101-2	. BUSHING,/SUPERCEDES 100801X5-0135/.	1	
	AN310-4	. NUT	1	
	AN380-2-2	. PIN,COTTER.	1	
		----*----		
- 27	35-815007-4	. LINK ASSY,MAIN GEAR DOOR.	1	
		/ATTACHING PARTS/		
- 28	AN4-12A	. BOLT.	1	
- 29	AN24-14	. BOLT.	1	
	AN960-416	. WASHER.	1	
	AN960-416L	. WASHER.	1	
	AN365-428	. NUT	1	
	AN320-4	. NUT	1	
	AN380-2-2	. PIN,COTTER.	1	
- 30	102933S5ZL0125	. SPACER.	2	
		----*----		
- 31	45-815116	. ARM ASSY,ACTUATOR IDLER	1	
		/ATTACHING PARTS/		
- 32	AN4-54A	. BOLT.	1	
- 33	100801S5-4781	. BUSHING	1	
	AN960-416	. WASHER.	1	
	100951P062YH	. WASHER.	2	
	108492S416-016	. WASHER.	1	
	AN365-428	. NUT	1	
		----*----		
- 34	35-815078	. LINK,MAIN LANDING GEAR UP LOCK CABLE.	1	
		/ATTACHING PARTS/		
- 35	AN24-14/M/	. BOLT.	1	
	AN960-416L	. WASHER.	1	
	AN320-4	. NUT	1	
- 36	105739S-YA0137	. BUSHING	1	
	100951S063WZ	. WASHER.	1	
	AN310-3	. NUT	1	
	AN380-2-2	. PIN,COTTER.	1	
		----*----		
	35-815109	. CABLE ASSY,MAIN GEAR UP LOCK.	1	
		/ATTACHING PARTS/		
- 37	AN23-10	. BOLT.	2	
	AN960-10	. WASHER.	1	
	AN960-10L	. WASHER.	1	
	AN310-3	. NUT	2	
	AN380-2-2	. PIN,COTTER.	2	
		----*----		
- 38	S167	. . HOUSING	1	
- 39	S123	. . BUSHING	1	
- 40	AN667-2	. . TERMINAL.	1	
- 41	AN666-2RH	. . TERMINAL.	1	
- 42	35-815109	. . CABLE,MAIN GEAR UP LOCK	1	
- 43	AN665-10R	. TERMINAL.	1	
	35-815077-8	. LOCK ASSY,MAIN LANDING GEAR UP LH	1	
		/SUPERCEDES 35-815077/		
	35-815077-9	. LOCK ASSY,MAIN LANDING GEAR UP RH	1	
		/SUPERCEDES 35-815077-1/		
		/ATTACHING PARTS/		
- 44	AN24-32	. BOLT.	1	
	AN960-416L	. WASHER.	1	
	AN310-4	. NUT	1	
	AN380-2-2	. PIN,COTTER.	1	
		----*----		

FIG. & INDEX NO.	PART NO.	1 2 3 4 5 6 7 DESCRIPTION	UNITS PER ASSY	USABLE ON CODE
38 - 45	35-815077-10	. . BRACKET,LANDING GEAR UP LOCK LH . . . . . /SUPERCEDES 35-815077-2/	1	
	35-815077-11	. . BRACKET,LANDING GEAR UP LOCK RH . . . . . /SUPERCEDES 35-815077-3/	1	
- 46	35-815077-4	. . BLOCK,LANDING GEAR UP LOCK LH	1	
	35-815077-5	. . BLOCK,LANDING GEAR UP LOCK RH . . . . . /ATTACHING PARTS/	1	
- 47	AN3-5A	. . BOLT.	2	
	AN960-10	. . WASHER.	2	
	AN365-1032	. . NUT . . . . . ----*----	2	
- 48	35-815115	. SPRING,MAIN LANDING GEAR UP LOCK.	1	
- 49	100942C0020-31	. SPRING,TENSION.	1	
- 50	35-815156	. BOOT ASSY,LANDING GEAR UP LOCK LH	1	
	35-815156-1	. BOOT ASSY,LANDING GEAR UP LOCK RH	1	

CODE	EFFECTIVITY	CODE	EFFECTIVITY
1	TD-1 THRU TD-545	2	TD-546 AND AFTER

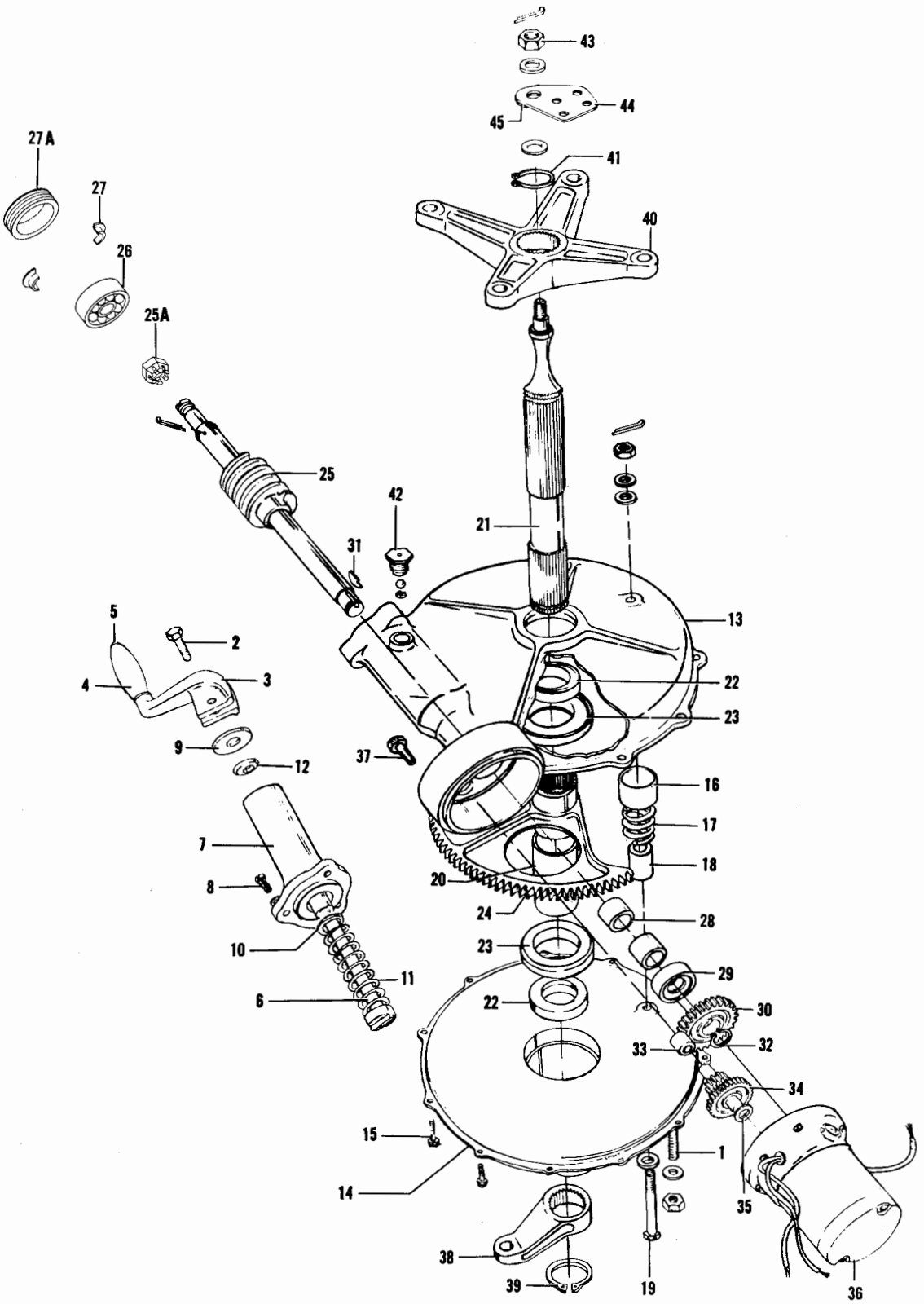

Figure 39. Main Landing Gear Actuator

FIG. & INDEX NO.	PART NO.	DESCRIPTION 1 2 3 4 5 6 7	UNITS PER ASSY	USABLE ON CODE
39	95-810017	ACTUATOR ASSY,MAIN LANDING GEAR RETRACT . . . . /SEE FIG. 38 FOR NHA/	REF	1
	95-810017-7	ACTUATOR ASSY,MAIN LANDING GEAR RETRACT . . . . /ATTACHING PARTS/	REF	2
- 1	35-810097	STUD.	4	
	AN960-416	WASHER.	4	
	AN365-420	NUT	4	
		----*----		
	35-810094	. CRANK ASSY,ACTUATOR HAND. . . . . /ATTACHING PARTS/	1	
- 2	AN23-17A	. BOLT.	1	
	AN960-10	. WASHER.	1	
	AN365-1032	. NUT	1	
		----*----		
- 3	35-810094-2	. . CRANK,ACTUATOR HAND	1	
- 4	35-810094-6	. . HANDLE,HAND CRANK	1	
- 5	AN393-77	. . PIN	1	
- 6	35-810095	. SHAFT,HAND CRANK ENGAGING	1	
- 7	35-810142	. HOUSING,HAND CRANK SHAFT. . . . . /ATTACHING PARTS/	1	
- 8	AN500A10-10	. SCREW	3	
	AN960-10	. WASHER.	3	
		----*----		
- 9	35-810134	. WASHER.	2	
- 10	100951X063YW	. WASHER.	1	
- 11	100943YC112D	. SPRING.	1	
- 12	AN6227-9	. RING,O.	1	
- 13	35-810141	. HOUSING,LANDING GEAR ACTUATOR UPPER	1	1
	35-810141-3	. HOUSING,LANDING GEAR ACTUATOR UPPER	1	2
- 14	35-815020	. HOUSING,LANDING GEAR ACTUATOR LOWER	1	
- 15	AN500A10-10	. SCREW	9	
	AN500A10-8	. SCREW	2	
	AN960-10	. WASHER.	11	
- 16	100696X-YD024	. SPACER,GEAR STOP.	1	
- 17	35-810119	. SPRING,GEAR STOP.	1	
- 18	35-810087	. STOP,WORM SECTOR GEAR . . . . . /ATTACHING PARTS/	1	
- 19	AN5-17	. BOLT.	1	
	AN960-516	. WASHER.	1	
	AN960D516	. WASHER.	2	
	AN310-5	. NUT	1	
	AN380-2-2	. PIN,COTTER.	1	
		----*----		
- 20	35-810088	. SPACER,LANDING GEAR ACTUATOR.	1	
- 21	35-810083	. SHAFT,ACTUATOR DRIVE.	1	
- 22	K21B	. BEARING,DRIVE SHAFT	2	
- 23	450273	. SEAL,/SUPERCEDES 50273-S & 276118/.	2	
- 24	35-810117	. SECTOR,ACTUATOR WORM.	1	1
	35-810167	. SECTOR,ACTUATOR WORM.	1	2
- 25	35-810076	. GEAR,ACTUATOR WORM.	1	
	AN380-3-4	. PIN,COTTER.	1	
- 25A	35-810147	. NUT,ACTUATOR WORM GEAR.	1	
- 26	5201	. BEARING	1	
- 27	35-810077	. BUSHING,ACTUATOR WORM GEAR.	2	
- 27A	45-810144	. NUT	1	1
	35-810143	. NUT	1	2
- 28	B88X	. BEARING	2	
- 29	09916-M1	. SEAL.	1	
- 30	35-810136	. GEAR,WORM DRIVE	1	
- 31	35-810091	. KEY,WORM DRIVE GEAR	1	
- 32	NAS51-43	. RING.	1	
- 33	M471X	. BEARING	1	
- 34	35-810135	. GEAR,SPUR & PINION.	1	
- 35	105090CR032-4E	. WASHER.	1	

FIG. & INDEX NO.	PART NO.	DESCRIPTION 1 2 3 4 5 6 7	UNITS PER ASSY	USABLE ON CODE
39 - 36	IS-14818	MOTOR ASSY,LANDING GEAR ACTUATOR /ATTACHING PARTS/	1	
- 37	AN73-15	BOLT	3	
	AN960-10L	WASHER	3	
		----*----		
	35175A	BRUSHES,MOTOR	2	
	YZ10-1	CONNECTOR	2	
	MS20659-5	TERMINAL,/SUPERCEDES AN659-5/	1	
- 38	35-825172-2	ARM,NOSE GEAR ACTUATOR RETRACT	1	
- 39	NAS51-131	RING	1	
- 40	45-810090	ARM,ACTUATOR RETRACT	1	
- 41	NAS51-131	RING	1	
- 42	35-810075-1	PLUG,WORM GEAR GREASE	1	1
	AN900-9	GASKET	1	1
	5677	PLUG ASSY,WORM GEAR GREASE	1	2
	35-810132	SUPPORT ASSY,LANDING GEAR ACTUATOR UPPER /ATTACHING PARTS/	1	
	AN960-716	WASHER	1	
	AN960-516	WASHER	1	
- 43	AN310-5	NUT	1	
	AN380-2-2	PIN,COTTER	1	
		----*----		
- 44	35-810132-2	SUPPORT,GEAR ACTUATOR UPPER	1	
- 45	35-810133	BUSHING,ACTUATOR GEAR SUPPORT	1	

CODE	EFFECTIVITY	CODE	EFFECTIVITY
1	TD-1 THRU TD-545	2	TD-546 AND AFTER

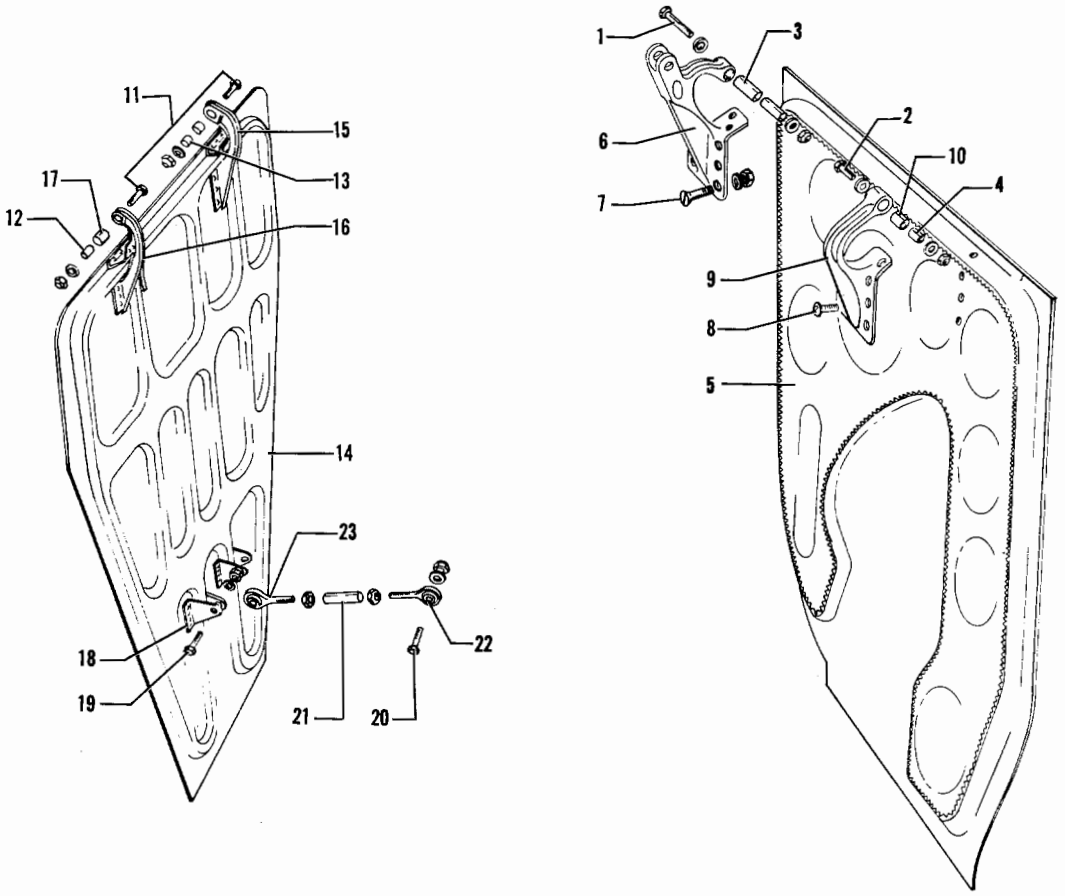

Figure 40. Main Landing Gear Doors

FIG. & INDEX NO.	PART NO.	DESCRIPTION 1 2 3 4 5 6 7	UNITS PER ASSY	USABLE ON CODE
40 -	35-815055	DOOR INSTL,MAIN LANDING GEAR LH	NP	
	35-815055-1	DOOR INSTL,MAIN LANDING GEAR RH	NP	
	¤35-815055-601	. DOOR ASSY,INBD LH /SUPERSEDES 35-815055-60/ .	1	
	¤35-815055-602	. DOOR ASSY,INBD RH /SUPERSEDES 35-815055-61/ .	1	
		/ATTACHING PARTS/		
- 1	¤AN3-15A/M/	. BOLT.	1	
- 2	¤AN3-10A/M/	. BOLT.	1	
	¤AN960-10	. WASHER.	2	
	¤AN960-10L	. WASHER.	2	
- 3	¤105739X-ZP1050	. BUSHING	1	
- 4	¤105739X-ZP0500	. BUSHING	1	
	¤MS20365-1032	. NUT /SUPERSEDES AN365-1032/	2	
		----*----		
- 5	¤35-815055-56	. . DOOR,INBD LH.	1	
	¤35-815055-57	. . DOOR,INBD RH.	1	
- 6	¤45-815005-1	. . HINGE ASSY,FWD INBD LH.	1	1
	35-815266-1	. . HINGE ASSY,FWD INBD LH.	1	2
	¤45-815005-2	. . HINGE ASSY,FWD INBD RH.	1	1
	35-815266-2	. . HINGE ASSY,FWD INBD RH.	1	2
		/ATTACHING PARTS/		
- 7	AN525-10-24	. . SCREW	3	
	AN525-10-8	. . SCREW	2	
	AN525-10-10	. . SCREW	2	
	¤AN960-10	. . WASHER.	5	
	¤MS20365-1032	. . NUT /SUPERSEDES AN365-1032/	5	
		----*----		

FIG. & INDEX NO.	PART NO.	DESCRIPTION 1 2 3 4 5 6 7	UNITS PER ASSY	USABLE ON CODE
40 -	¤35-815016	. . HINGE ASSY,AFT INBD LH.	1	
	¤35-815016-1	. . HINGE ASSY,AFT INBD RH.	1	
		/ATTACHING PARTS/		
- 8	AN525-10-10	. . SCREW	4	
	¤AN960-10	. . WASHER.	3	
	¤AN960-10L	. . WASHER.	3	
	¤MS20365-1032	. . NUT /SUPERSEDES AN365-1032/	3	
	¤MS20364-1032	. . NUT /SUPERSEDES AN364-1032/	1	
		----*----		
- 9	¤35-815016-2	. . . HINGE,LH.	1	
	¤35-815016-3	. . . HINGE,RH.	1	
- 10	¤105740X-ZR0480	. . . BUSHING	1	
	¤35-815055-68	. DOOR ASSY,OUTBD LH.	1	
	¤35-815055-69	. DOOR ASSY,OUTBD RH.	1	
		/ATTACHING PARTS/		
- 11	¤AN3-10A/M/	. BOLT.	2	
	¤AN960-10	. WASHER.	2	
- 12	¤105739X-ZM0500	. BUSHING	1	
- 13	¤105740X-ZJ0490	. BUSHING	1	
	¤MS20365-1032	. NUT /SUPERSEDES AN365-1032/	2	
		----*----		
- 14	35-815055-64	. . DOOR,OUTBD LH	1	
	¤35-815055-65	. . DOOR,OUTBD RH	1	
- 15	¤35-815055-10	. . HINGE ASSY,FWD OUTBD LH	1	
	35-815055-11	. . HINGE ASSY,FWD OUTBD RH	1	
- 16	¤35-815055-12	. . HINGE ASSY,AFT OUTBD LH	1	
	¤35-815055-13	. . HINGE ASSY,AFT OUTBD RH	1	
	¤AN960-10	. . WASHER.	AR	
- 17	¤105740X-ZJ0490	. . . BUSHING	1	
- 18	35-815055-62	. . BRACKET,HINGE LH.	2	
	35-815055-63	. . BRACKET,HINGE RH.	2	
	¤35-815056	. LINK,LANDING GEAR DOOR OUTBD.	2	
		/ATTACHING PARTS/		
- 19	¤AN4-10A/M/	. BOLT.	1	
- 20	¤AN4-7A/M/	. BOLT.	1	
	¤AN960-416	. WASHER.	6	
	¤MS20365-428	. NUT /SUPERSEDES AN365-428/.	2	
		----*----		
- 21	¤35-815056-2	. . TUBE,LANDING GEAR DOOR.	1	
- 22	¤HM4U	. . END,ROD /SUPERSEDES HM4/.	1	
- 23	¤35-815056-4	. . END,ROD	1	
	¤AN316-4R	. . NUT	1	

CODE	EFFECTIVITY	CODE	EFFECTIVITY
1	TD-1 THRU TD-726	2	TD-727 AND AFTER

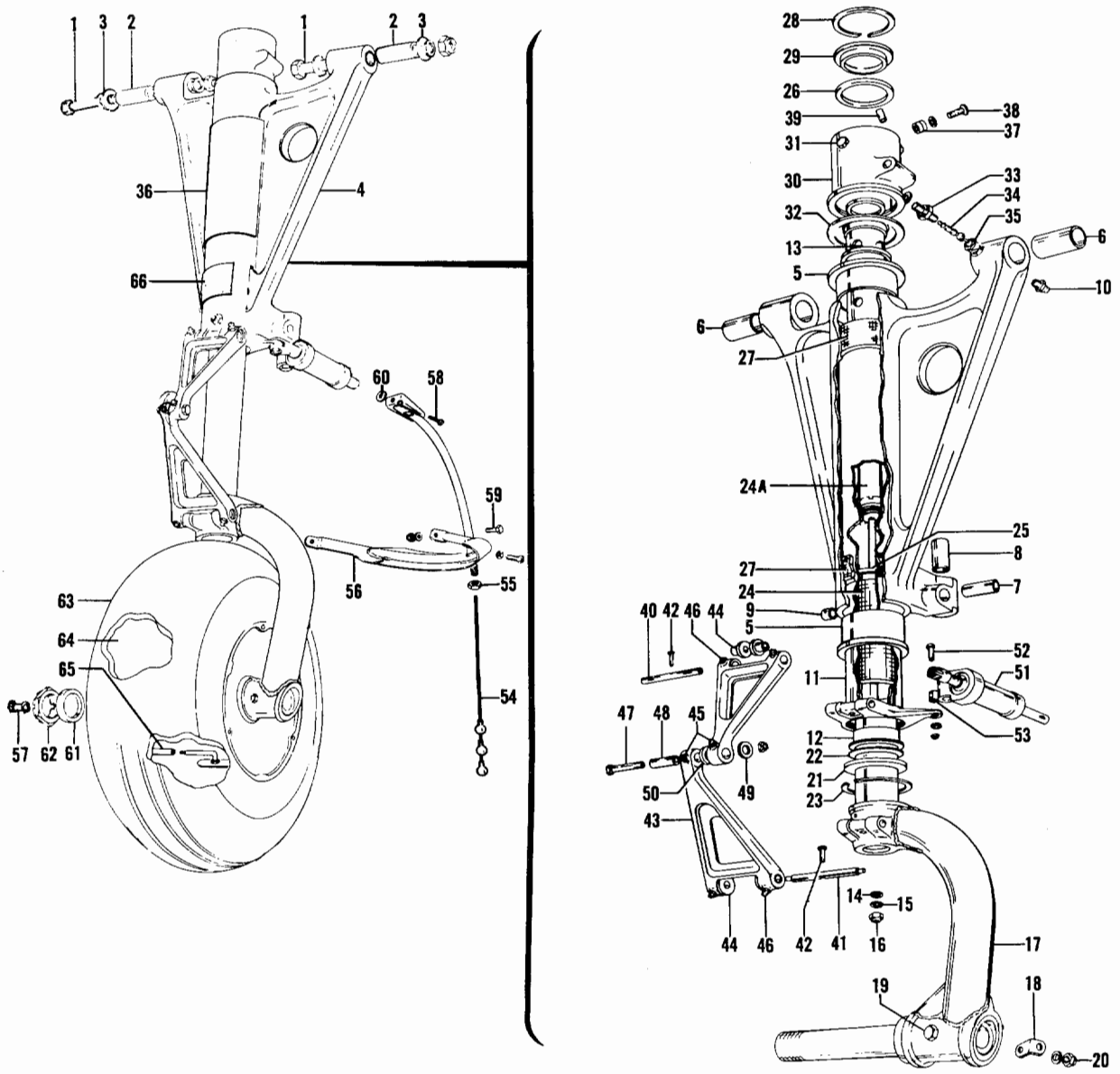

Figure 41. Nose Landing Gear (TD-1 thru TD-402)

FIG. & INDEX NO.	PART NO.	DESCRIPTION 1 2 3 4 5 6 7	UNITS PER ASSY	USABLE ON CODE
		GEAR INSTL,NOSE LANDING		1
41	95-824005	GEAR ASSY,NOSE LANDING /SPARE ASSY,	1	1
		SEE SECTION 4 FOR COMPONENTS/		
		/LESS TIRE,TUBE & WHEEL/		
		/ATTACHING PARTS/		
- 1	NAS146-46	BOLT	2	
- 2	45-825011	BUSHING,NOSE GEAR GRIP	2	
	AN960-616	WASHER	2	
	NAS143-6C	WASHER	2	
- 3	100951X032YP	WASHER	2	
	AN365-624	NUT	2	
		----*----		
	95-824005-3	BRACE ASSY,NOSE SHOCK ABSORBER	1	1
- 4	95-824005-1	BRACE,SHOCK ABSORBER	1	1
- 5	35-820115	BEARING,NOSE SHOCK ABSORBER BRACE	2	1
- 6	35-820135	BEARING,NOSE WHEEL BRACE	2	1
- 7	105740X-YD1365	BUSHING	1	1
- 8	105740X-YN1458	BUSHING	1	1
- 9	105740X-YD0490	BUSHING	1	1
- 10	MS15002-1	FITTING	4	1
	95-824016	BARREL ASSY,NOSE SHOCK ABSORBER	1	1
	95-824016-1	REINFORCEMENT	1	1
- 11	95-824016-3	BRAZE ASSY,NOSE SHOCK ABSORBER	1	1
- 12	45-825031	BEARING,PISTON NOSE GEAR LOWER	1	1
- 13	95-824011	CONTROL ASSY,NOSE SHOCK ABSORBER	1	1
- 14	AN6227-5	PACKING,O RING HYDRAULIC	1	1
- 15	AN960-416	WASHER	1	1
- 16	AN365-428	NUT	1	1
	95-824014-602	PISTON & FORK ASSY,NOSE WHEEL /SPARE ASSY,	1	1
		SEE SECTION 4 FOR COMPONENTS/		
		PISTON & FORK ASSY,NOSE WHEEL		1
- 17	35-820131-7	PISTON & FORK ASSY,NOSE SHOCK ABSORBER	1	1
- 18	35-820133	CLIP,NOSE WHEEL SCRAPER ATTACHING LH	1	1
		/ATTACHING PARTS/		
- 19	AN4-21A	BOLT	1	
	AN960-416	WASHER	2	
- 20	AN365-428	NUT	1	
		----*----		
- 21	45-825032	ADAPTER,PISTON SCRAPER NOSE GEAR	1	1
- 22	AN6231A19	SCRAPER	1	1
- 23	111200-6	RING,SNAP	1	1
- 24	35-820130-2	PAD,NOSE WHEEL SHOCK ABSORBER BARREL	1	1
- 24A	35-820114-2	CONTROL ASSY,NOSE SHOCK ABSORBER	1	1
- 25	AN6230-2	GASKET	1	1
- 26	AN6230-1	GASKET	1	1
- 27	35-820130-4	PAD	2	1
- 28	NAS50-187	RING,SNAP	1	1
- 29	35-820122	PLUG,NOSE SHOCK ABSORBER BARREL	1	1
- 30	45-825033	COLLAR,NOSE GEAR STEERING	1	1
		/ATTACHING PARTS/		
- 31	45-825034	BOLT,NOSE GEAR STEERING COLLAR	2	
		----*----		
- 32	35-820134	SHIM,NOSE WHEEL STEERING COLLAR	1	1
- 33	35-820125	BODY,NOSE STRUT FILLER VALVE	1	1
	AN6227-6	PACKING	1	1
- 34	302D	CORE	1	1
- 35	AN813-1B	CAP	1	1
- 36	45-824012	PLACARD,SHOCK STRUT FILLING INSTRUCTION	1	1
- 37	NAS505-4J	BEARING	1	1
- 38	NAS222-16	BOLT	1	1
	AN960-416L	WASHER	1	1
	AN960-416	WASHER	1	1
- 39	S1452-048	NUT	1	1

FIG. & INDEX NO.	PART NO.	DESCRIPTION 1 2 3 4 5 6 7	UNITS PER ASSY	USABLE ON CODE
41	35-820107	. . KNEE ASSY,NOSE SHOCK ABSORBER TORQUE. . . .	2	1
		/ATTACHING PARTS/		
- 40	35-820108	. . PIN,NOSE WHEEL TORQUE KNEE UPPER.	1	
- 41	35-820132	. . PIN,NOSE WHEEL TORQUE KNEE LOWER.	1	
- 42	AN392-23	. . PIN	2	
	AN380-2-1	. . PIN,COTTER.	2	
		----*----		
- 43	35-820107-1	. . . KNEE,TORQUE	2	1
- 44	35-820123	. . . BUSHING,NOSE WHEEL TORQUE KNEE UPPER. . .	4	1
- 45	1729	. . . FITTING	2	1
- 46	MS15002-1	. . . FITTING	4	1
- 47	AN4-12	. . BOLT.	1	1
- 48	35-820028	. . BUSHING,NOSE WHEEL TORQUE KNEE GRIP	1	1
- 49	100951S063ZZ	. . WASHER.	1	1
- 50	100951S063YH	. . WASHER.	1	1
	AN310-4	. . NUT	1	1
	AN380-2-2	. . PIN,COTTER.	1	1
- 51	35-825145	. . DAMPENER ASSY,NOSE GEAR SHIMMY.	1	1
		/SEE FIG. 43/		
		/ATTACHING PARTS/		
- 52	AN3-6A	. . BOLT.	1	
- 53	105739S-ZK0190	. . BUSHING	1	
	AN960-10	. . WASHER.	1	
	AN960-10L	. . WASHER.	1	
	AN365-1032	. . NUT	1	
		----*----		
	45-361235	. GROUND ASSY,STATIC.	1	1
- 54	45-361235-9	. . CABLE,GROUND.	1	1
- 55	694-180702	. NUT,STATIC GROUND WIRE ATTACHING.	1	1
- 56	35-825175-12	. GUARD ASSY,NOSE WHEEL SCRAPER	1	1
		/SUPERCEDES 35-825175-6/		
		/ATTACHING PARTS/		
- 57	AN4H3A	. BOLT.	1	
- 58	AN4H4A	. BOLT.	1	
- 59	AN4-5A	. BOLT.	1	
- 60	AN960-416L	. WASHER.	1	
	AN960-416	. WASHER.	2	
	AN365-428	. NUT	1	
		----*----		
	95-20653	. WHEEL ASSY,NOSE /SEE FIG. 41B/.	1	2
		. WHEEL ASSY,NOSE /SEE FIG. 41C/ /FOR COMPLETE.		3
		WHEEL ASSY,ORDER 95-32669/		
		/ATTACHING PARTS/		
- 61	35-825129	. WASHER,NOSE WHEEL AXLE.	1	2
	95-820000-1	. WASHER,NOSE WHEEL LH.	1	3
	95-820000-3	. WASHER,NOSE WHEEL RH.	1	3
- 62	AN7502-20	. NUT	1	
	AN380-4-7	. PIN,COTTER.	1	
		----*----		
- 63	5.00X5	. TIRE,TUBE TYPE.	1	2
- 64	5.00X5	. TUBE.	1	2
	5.00X5	. TIRE,6 PLY SIDEWALL INFLATION TUBELESS. . . .	1	3
- 65	45-825001-3	. HOSE,NOSE WHEEL VALVE STEM.	1	2
- 66	95-824017	. PLACARD,TOWING.	1	2

CODE	EFFECTIVITY	CODE	EFFECTIVITY
1	TD-1 THRU TD-402	2	TD-1 THRU TD-300
3	TD-301 THRU TD-402		

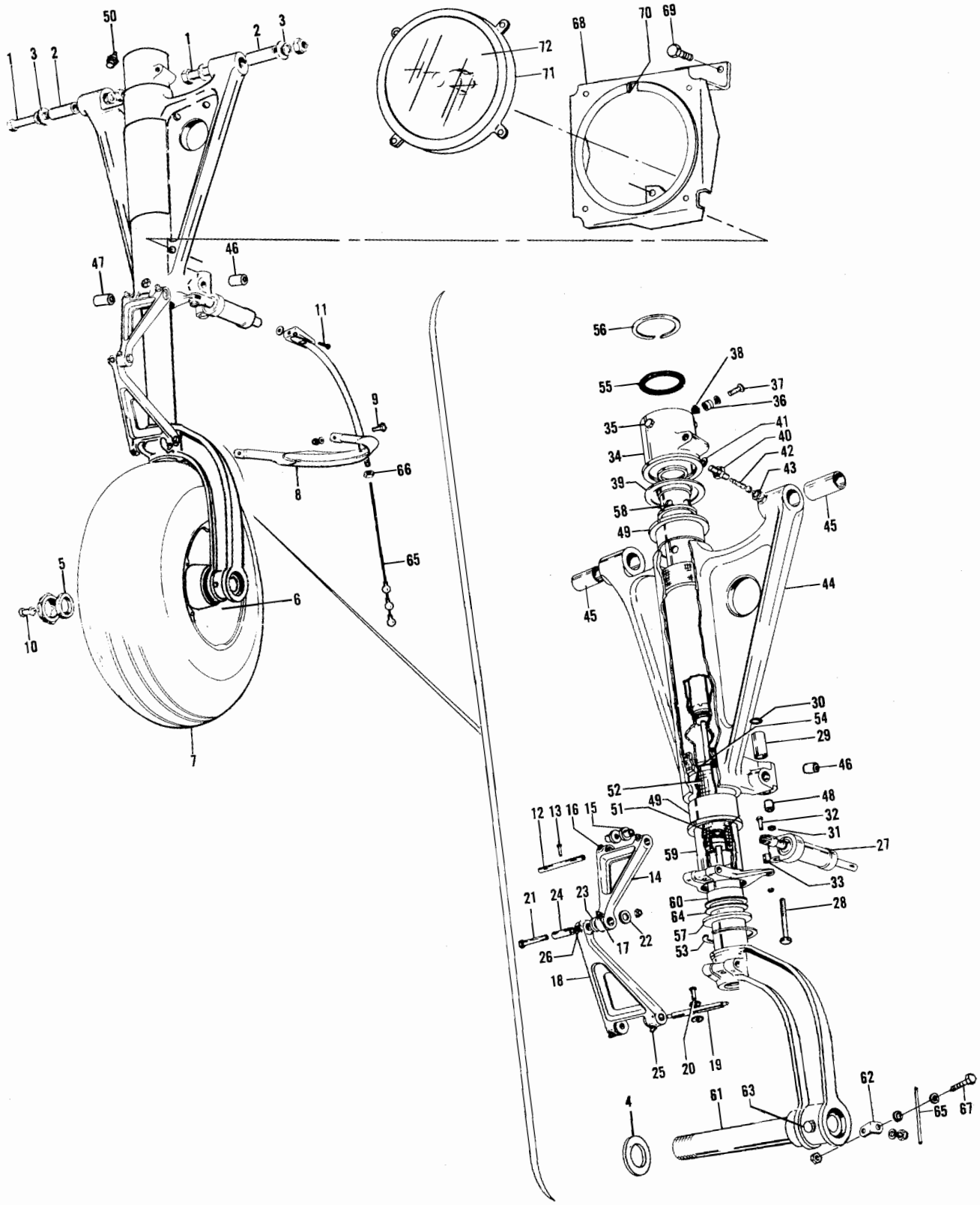

Figure 41A. Nose Landing Gear (TD-403 And After)

B1

FIG. & INDEX NO.	PART NO.	DESCRIPTION 1 2 3 4 5 6 7	UNITS PER ASSY	USABLE ON CODE
41A	35-825196-601	GEAR ASSY,NOSE /COMPLETE/	1	1
	35-825196-614	GEAR ASSY,NOSE /COMPLETE/	1	2
	35-825196-618	GEAR ASSY,NOSE /COMPLETE/	1	3
	¤35-825196-691	GEAR ASSY,NOSE /LESS TIRE AND WHEEL/.	1	1
	35-825196-696	GEAR ASSY,NOSE /LESS TIRE AND WHEEL/.	1	4
		/ATTACHING PARTS/		
- 1	¤NAS146-46/M/	BOLT.	2	
- 3	¤45-825011	BUSHING	2	
- 3	¤100951X032YP	WASHER.	2	
	¤100951S016YP	WASHER /ALTERNATE FOR 10095IX032YP/	AR	
	¤NAS143-6C	WASHER.	2	
	¤AN960-616	WASHER.	2	
	MS20364-624	NUT	2	
		----*----		
	¤35-825196-23	. WHEEL,TIRE & TUBE ASSY,BALANCED	1	3
		/ATTACHING PARTS/		
- 4	¤35-825195-35	. WASHER,NOSE WHEEL /LOCATE NEXT TO SHOULDER/ .	1	
		/SUPERSEDES 95-820000-1/		
- 5	¤95-820000-3	. WASHER,NOSE WHEEL	1	
	¤AN7502-20	. NUT	1	
	¤AN380-4-7	. PIN,COTTER.	1	
		----*----		
- 6	¤95-32669	. . WHEEL ASSY /SUPERSEDES 95-32102/.	1	5
		/SEE FIG. 41C/ /TUBELESS TIRE/		
	¤95-32926	. . WHEEL ASSY /TUBE TYPE TIRE/ /SEE FIG. 41C/.	1	5
- 7	¤5.00X5	. . TIRE,6 PLY TUBELESS	1	5
	¤5.00X5	. . TIRE,6 PLY TUBE TYPE.	1	5
	¤5.00X5	. . TUBE.	1	5
- 8	¤35-825175-12	. WELD ASSY,NOSE WHEEL SCRAPER GUARD.	1	5
		/ATTACHING PARTS/		
- 9	¤AN4-5A/M/	. BOLT,LH SIDE.	1	
- 10	¤AN4H3A/M/	. BOLT,RH SIDE.	1	
- 11	¤AN4H4A/M/	. BOLT.	1	
	¤AN960-416	. WASHER.	3	
	¤MS20365-428	. NUT	1	
		----*----		
	¤35-820107	. KNEE ASSY,NOSE SHOCK UPPER.	1	5
		/ATTACHING PARTS/		
- 12	¤35-820108	. PIN	1	
- 13	¤AN392-23	. PIN	1	
	¤MS24665-130	. PIN,COTTER.	1	
		----*----		
- 14	35-820107-1	. . KNEE,NOSE SHOCK UPPER	1	5
- 15	¤35-820123	. . BUSHING,UPPER KNEE.	2	5
- 16	¤MS15002-1	. . FITTING,ZERK.	2	5
- 17	¤1729	. . FITTING,ZERK.	1	5
- 18	¤35-825193-1	. KNEE,NOSE SHOCK LOWER	1	5
		/ATTACHING PARTS/		
- 19	¤35-820132	. PIN	1	
- 20	¤AN392-21	. PIN	1	
	¤MS24665-130	. PIN,COTTER.	1	
- 21	¤AN4-12/M/	. BOLT.	1	
- 22	¤100951S063ZZ	. WASHER.	1	
- 23	¤100951S063YH	. WASHER.	1	
- 24	¤35-820028	. BUSHING	1	
	¤AN310-4	. NUT	1	
	¤MS24665-132	. PIN,COTTER.	1	
		----*----		
- 25	¤MS15002-1	. FITTING,ZERK.	2	5
- 26	¤1729	. FITTING,ZERK.	1	5

FIG. & INDEX NO.	PART NO.	DESCRIPTION 1 2 3 4 5 6 7	UNITS PER ASSY	USABLE ON CODE
41A- 27	¤35-825145	. DAMPENER ASSY,NOSE GEAR SHIMMY /SEE FIG. 54/.	1	5
		/ATTACHING PARTS/		
- 28	¤AN6-31A/M/	. BOLT.	1	
- 29	¤105739S-YP1483	. BUSHING	1	
- 30	¤100951X031YM	. WASHER.	1	
- 31	¤100951X031YN	. WASHER.	1	
	AN365-624	. NUT	1	
- 32	¤AN3-6A/M/	. BOLT.	1	
- 33	¤105739S-ZK0190	. BUSHING	1	
	¤AN960-10	. WASHER.	1	
	¤AN960-10L	. WASHER.	1	
	¤MS20365-1032	. NUT	1	
		----*----		
- 34	¤45-825033	. COLLAR,NOSE GEAR STEERING	1	5
		/ATTACHING PARTS/		
- 35	¤45-825034	. BOLT.	2	
		----*----		
- 36	¤NAS505-4J	. BEARING,NEEDLE.	1	5
	NAS222-17	. BOLT.	1	1
- 37	¤NAS222-16	. BOLT.	1	4
	¤AN960-416L	. WASHER.	2	5
	¤AN960-416	. WASHER /ALTERNATE FOR AN960-416L/	2	5
- 38	¤S1452-048	. NUT,BARREL.	1	5
- 39	¤35-820134	. SHIM,NOSE WHEEL STEERING COLLAR	1	5
	¤35-820125	. BODY,NOSE STRUT FILLER VALVE.	1	1
- 40	¤118642-1	. BODY,NOSE STRUT FILLER VALVE.	1	2
	AN6227-6	. PACKING	1	1
- 44	¤MS28778-5	. GASKET.	1	2
- 42	¤3020	. CORE,NOSE STRUT FILLER VALVE.	1	5
	¤AN813-1B	. CAP,NOSE STRUT FILLER VALVE	1	1
- 43	MS20813-1	. CAP,NOSE STRUT FILLER VALVE	1	2
	¤95-824005-3	. BRACE ASSY,NOSE SHOCK ABSORBER.	1	6
	¤95-824005-601	. BRACE ASSY,NOSE SHOCK ABSORBER.	1	3
- 44	¤95-824005-1	. . BRACE	1	5
- 45	¤35-820135	. . BEARING	2	5
- 46	¤105740X-Y01365	. . BUSHING	1	5
- 47	105740X-YD0490	. . BUSHING	1	5
- 48	¤105740X-YN1458	. . BUSHING	1	5
- 49	¤35-820115	. . BEARING	2	5
- 50	¤MS15002-1	. . FITTING,ZERK.	4	6
	¤MS15002-1	. FITTING,ZERK.	4	3
- 51	¤35-380020-3	. RING,SHOCK ABSORBER PISTON.	1	5
- 52	¤35-820130-2	. PAD,SHOCK ABSORBER.	1	5
- 53	¤111200-6	. SNAP RING	1	5
- 54	¤AN6230B2	. O RING.	1	5
- 55	¤AN6230B1	. O RING.	1	5
- 56	¤NAS50-187	. RING,SNAP	1	5
- 57	¤AN6231A19	. SCRAPER,NOSE GEAR PISTON.	1	5
	35-825195-37	. TUBE ASSY,SHOCK ABSORBER ORIFICE.	1	6
- 58	¤35-825195-51	. TUBE ASSY,SHOCK ABSORBER ORIFICE.	1	3
	¤35-825195-21	. BARREL ASSY,NOSE WHEEL.	1	1
	¤35-825195-31	. BARREL ASSY,NOSE WHEEL.	1	2
- 59	¤95-825195-27	. . BRAZE ASSY,NOSE WHEEL BARREL.	1	1
	35-825195-33	. . BRAZE ASSY,NOSE WHEEL BARREL.	1	2
- 60	¤45-825031	. . BEARING	1	5
	¤35-825195-601	. PISTON & FORK ASSY,NOSE GEAR /WELDED FORK/. .	1	6
- 61	¤35-825195-603	. PISTON & FORK ASSY,NOSE GEAR /FORGED FORK/. .	1	3
- 62	¤35-820133	. CLIP,STATIC GROUND CABLE.	1	5
		/ATTACHING PARTS/		
- 63	¤AN4-21A/M/	. BOLT.	1	
	¤AN960-416	. WASHER.	1	
	¤MS20365-428	. NUT	1	
		----*----		

FIG. & INDEX NO.	PART NO.	DESCRIPTION 1 2 3 4 5 6 7	UNITS PER ASSY	USABLE ON CODE
41A- 64	¤45-825032	. ADAPTER,NOSE GEAR PISTON SCRAPER.	1	5
- 65	¤35-825196-25	. CABLE ASSY,STATIC GROUND /SUPERSEDES.	1	5
		45-361235/		
		/ATTACHING PARTS/		
- 66	¤694-180702	. NUT	1	
- 67	¤96-820011	. BOLT.	1	
	¤AN960-416	. WASHER.	2	
	¤MS20364-428	. NUT	1	
		----*----		
	96-364012	LIGHT INSTL,NOSE GEAR TAXI.	NP	5
	¤95-364032-1	. BRACKET	1	6
- 68	¤96-364012-3	. BRACKET	1	3
		/ATTACHING PARTS/		
- 69	AN3A	. BOLT.	3	
	¤MS20365-1032	. NUT	3	
		----*----		
- 70	¤112416-01316	. EXTRUSION	1	5
	¤45-115018	. CLAMP	1	6
- 71	D6-364012-5	. CLAMP	1	3
	¤4570	. BULB.	1	6
- 72	¤4626	. BULB.	1	3

CODE	EFFECTIVITY	CODE	EFFECTIVITY
1	TD-403 THRU TD-600	2	TD-601 THRU TD-699
3	TD-700 AND AFTER	4	TD-601 AND AFTER
5	TD-403 AND AFTER	6	TD-403 THRU TD-699

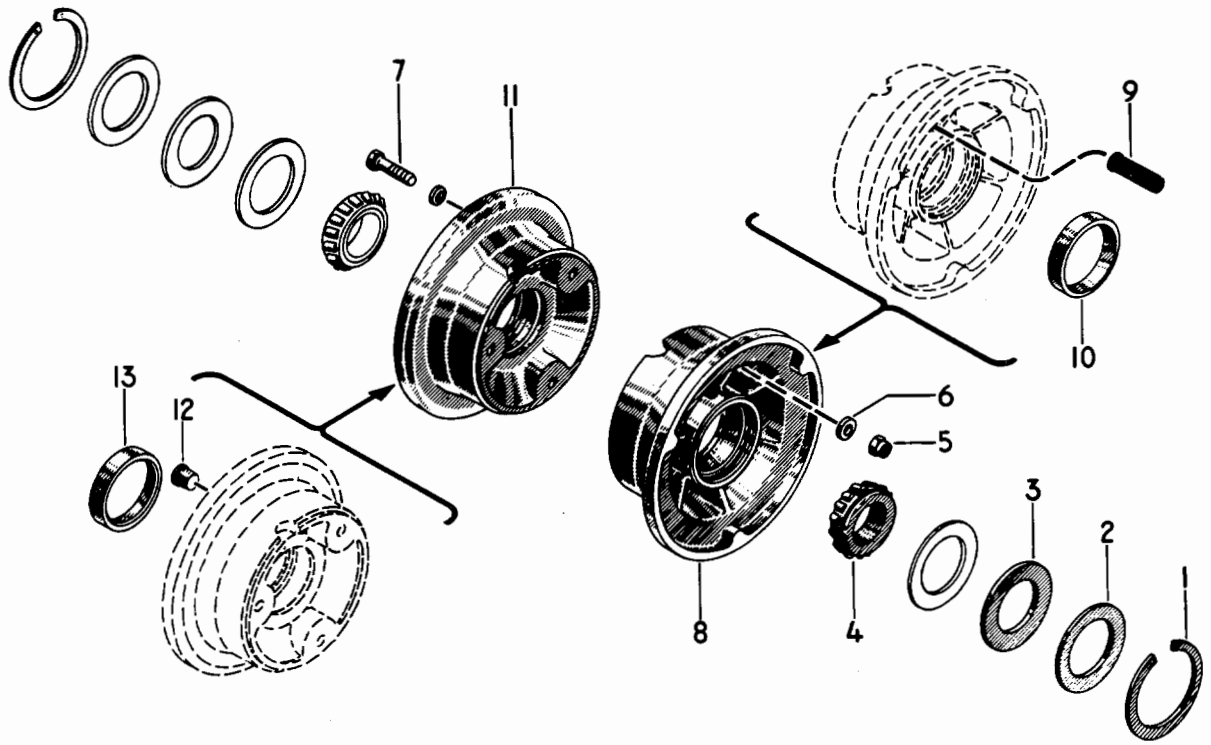

Figure 41B. Nose Wheel (TD-1 thru TD-300)

FIG. & INDEX NO.	PART NO.	DESCRIPTION 1 2 3 4 5 6 7	UNITS PER ASSY	USABLE ON CODE
41B-	95-20653	NOSE WHEEL ASSY,5.00-5 TUBE TYPE. . . . . /SEE FIG. 41 FOR NHA/	1	1
- 1	95-5154	. RING,BEARING CLOSURE RETAINING.	2	1
- 2	95-10236	. RING,BEARING CLOSURE.	4	1
- 3	95-4547	. RING,FELT SEAL.	2	1
- 4	08125	. CONE,BEARING.	2	1
- 5	AN365-428	. NUT,SELF LOCKING.	3	1
- 6	AN960-416	. WASHER.	6	1
- 7	AN4-11A	. BOLT.	3	1
- 8	95-20925	. WHEEL SUBASSY,FEMALE HALF	1	1
- 9	95-23566	. . BUSHING,VALVE STEM.	1	1
- 10	08231	. . CUP,BEARING	1	1
- 11	95-10186	. WHEEL SUBASSY,MALE HALF	1	1
- 12	95-6891	. . PLUG,VALVE HOLE	1	1
- 13	08231	. . CUP,BEARING	1	1

CODE EFFECTIVITY

1 TD-1 THRU TD-300

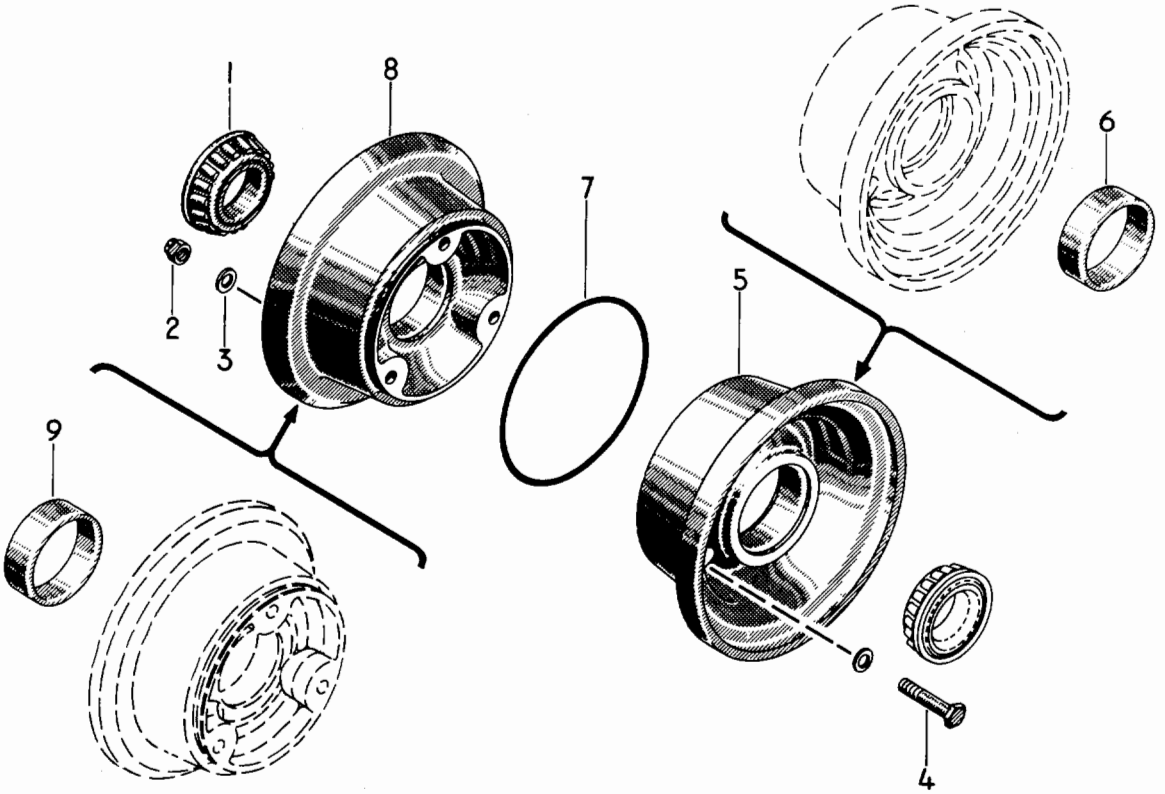

Figure 41C. Nose Wheel (TD-301 And After)

FIG. & INDEX NO.	PART NO.	DESCRIPTION 1 2 3 4 5 6 7	UNITS PER ASSY	USABLE ON CODE
41C-	¤95-32669	NOSE WHEEL ASSY,5.00-5 TUBELESS,SIDEWALL VALVE. /SUPERSEDES 95-32102/ /SEE FIG. 41A FOR NHA/	NP	1
	¤95-32926	NOSE WHEEL ASSY /TUBE TYPE TIRE/. . . . . /SEE FIG. 41A FOR NHA/	NP	1
- 1	¤LM-67048XL	. CONE,BEARING TYSEAL	2	1
- 2	¤95-6867	. NUT	3	1
- 3	¤AN960-416	. WASHER.	6	1
- 4	¤AN4-14A/M/	. BOLT.	3	1
- 5	¤95-24192	. WHEEL SUBASSY,FEMALE HALF /USE ON 95-32102. . WHEEL ASSY/ /TUBELESS TIRE/	1	1
	¤95-32671	. WHEEL SUB ASSY,FEMALE HALF /USE ON 95-32669 . WHEEL ASSY/ /TUBELESS TIRE/	1	1
	¤95-41899	. WHEEL ASSY /TUBE TYPE TIRE/	1	1
- 6	¤LM-67010XL	. . CUP,BEARING TYSEAL.	1	1
- 7	¤95-25419	. SEAL,WHEEL O RING /SUPERSEDES AN6230B20/. . .	1	1
- 8	95-32671	. WHEEL ASSY,MALE HALF /USE ON 95-32102 . . . . WHEEL ASSY/ /TUBELESS TIRE/	1	1
	¤95-32672	. WHEEL ASSY,MALE HALF /USE ON 95-32669 . . . . WHEEL ASSY/ /TUBELESS TIRE/	1	1
	¤95-41898	. WHEEL ASSY,MALE HALF /USED ON 95-32926 WHEEL ASSY/ /TUBE TYPE TIRE/	1	1
- 9	¤LM-67010XL	. . CUP,BEARING TYSEAL.	1	1

CODE EFFECTIVITY

1 TD-301 AND AFTER

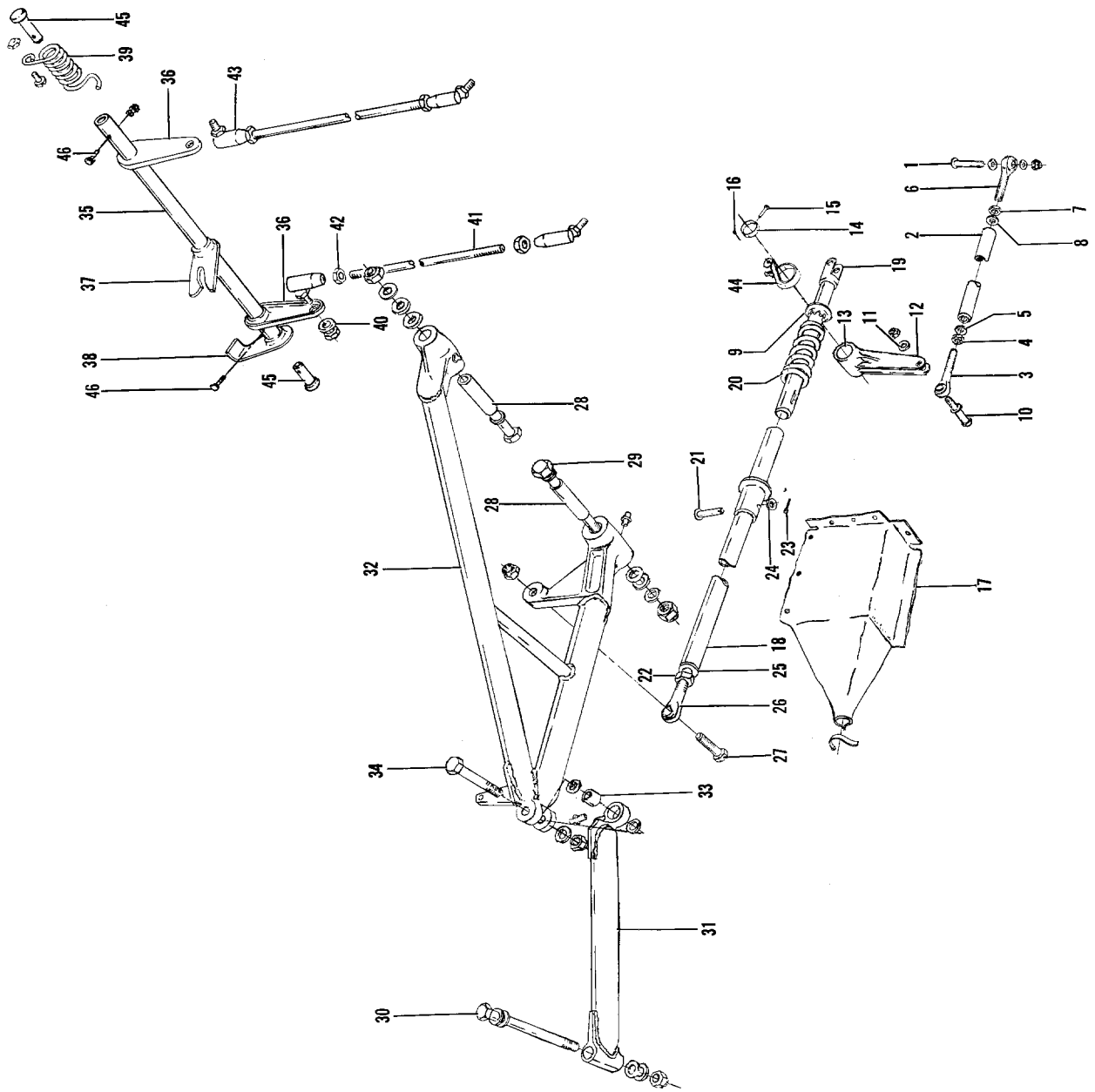

Figure 42. Nose Landing Gear Retract Mechanism

FIG. & INDEX NO.	PART NO.	DESCRIPTION 1 2 3 4 5 6 7	UNITS PER ASSY	USABLE ON CODE
		MECHANISM INSTL,NOSE GEAR RETRACT		
		/SEE FIG. 1 FOR NHA/		
42	35-825185-14	. ROD ASSY,NOSE GEAR RETRACT AFT.	1	
		/ATTACHING PARTS/		
- 1	AN26-28	. BOLT.	1	
	AN320-6	. NUT	1	
	AN960-616L	. WASHER.	2	
	AN380-2-2	. PIN,COTTER.	1	
	AN960-616	. WASHER.	1	
		----*----		
- 2	35-825185-12	. . BRAZE ASSY,NOSE GEAR RETRACT ROD.	1	
- 3	HMX5FG	. . END,ROD	1	
- 4	AN316-6R	. . NUT	1	
- 5	AN960-616L	. . WASHER.	1	
- 6	HMXL6FG	. . END,ROD	1	
- 7	AN316-7L	. . NUT	1	
- 8	AN960-716L	. . WASHER.	1	
- 9	50727	. PLUG,BUTTON	1	
	35-820094	. ARM ASSY,NOSE GEAR RETRACT IDLER.	1	
		/ATTACHING PARTS/		
- 10	AN25-22	. BOLT.	1	
	AN320-5	. NUT	1	
	AN960-516L	. WASHER.	2	
	AN380-2-2	. PIN,COTTER.	1	
- 11	100951CR016YF	. WASHER.	2	
		----*----		
- 12	35-820094-2	. . ARM,NOSE GEAR RETRACT IDLER	1	
- 13	35-820094-4	. . BUSHING,NOSE GEAR RETRACT IDLER	1	
- 14	35-820095	. COLLAR,NOSE GEAR RETRACT IDLER.	1	
- 15	MS20392-1-37	. PIN,/SUPERCEDES AN392-37/	1	
- 16	AN380-2-1	. PIN,COTTER.	1	
- 17	35-825076-1	. BOOT,NOSE GEAR RETRACT ROD.	1	
	95-824020	. ROD ASSY,NOSE GEAR RETRACT FWD LINK	1	
- 18	95-824020-3	. . BRAZE ASSY,NOSE GEAR RETRACT FWD LINK ROD .	1	
- 19	35-825094-4	. . PLUNGER ASSY,LINK ROD	1	
- 20	35-825188	. . SPRING,NOSE GEAR RETRACT.	1	
- 21	45-824014	. . PIN,NOSE GEAR RETRAINER	1	
- 22	AN316-6R	. . NUT	1	
- 23	AN380-2-2	. . PIN,COTTER.	1	
- 24	AN960D10L	. . WASHER.	1	
- 25	AN960-616L	. . WASHER.	1	
- 26	HMX5FG	. . END,ROD	1	
	95-824018	. BRACE ASSY,NOSE GEAR RETRACT.	1	
		/ATTACHING PARTS/		
- 27	35-825108	. BOLT.	1	
	AN320-5	. NUT	1	
	AN380-2-2	. PIN,COTTER.	1	
- 28	35-825123	. BUSHING,NOSE GEAR DRAG LEG.	2	
- 29	AN6-30A	. BOLT.	2	
	AN365-624	. NUT	2	
	AN960-616	. WASHER.	8	
	AN960-616L	. WASHER.	2	
- 30	45-825084	. BOLT.	1	1
	AN6-36	. BOLT.	1	2
	AN960-616	. WASHER.	4	
	AN310-6	. NUT	1	
	AN380-2-3	. PIN,COTTER.	1	
		----*----		
- 31		. . LEG ASSY,NOSE GEAR RETRACT DRAG		1
		. . LEG ASSY,NOSE GEAR RETRACT DRAG		2
- 32		. . BRACE ASSY,NOSE GEAR AFT DRAG		
		/ATTACHING PARTS/		
- 33	35-810122	. . BUSHING,RETRACT BRACE GRIP.	1	
- 34	AN175-14A	. . BOLT,/SUPERCEDES NAS55A14/.	1	
	AN960-716	. . WASHER.	2	
	AN960-516	. . WASHER.	1	
	AN365-524	. . NUT	1	
		----*----		

FIG. & INDEX NO.	PART NO.	DESCRIPTION 1 2 3 4 5 6 7	UNITS PER ASSY	USABLE ON CODE
42	95-820006-1	. SHAFT ASSY,NOSE GEAR DOOR ACTUATOR.	1	
- 35	45-824009-3	. . TUBE,NOSE GEAR DOOR ACTUATOR.	1	
- 36	35-825119-1	. . ARM,NOSE GEAR DOOR ACTUATOR	2	
- 37	45-824011	. . CAM,NOSE GEAR DOOR ACTUATOR	1	
- 38	35-825118	. . STOP,NOSE GEAR DOOR ACTUATOR.	1	
- 39	35-825074	. SPRING,NOSE GEAR RETRACT.	1	
	35-825191-1	. ROD ASSY,NOSE GEAR RETRACT LH	1	
	35-825191-3	. ROD ASSY,NOSE GEAR RETRACT RH	1	
		/ATTACHING PARTS/		
- 40	AN960-10	. WASHER.	4	
	AN364-1032	. NUT	2	
		----*----		
- 41	35-825191-5	. . ROD,LH NOSE GEAR DOOR	1	
	35-825191-7	. . ROD,RH NOSE GEAR DOOR	1	
- 42	AN315-3R	. . NUT	2	
- 43	B-40-1	. . JOINT,BALL /SUPERCEDES 316/	2	
- 44	35-825111	. BRACKET,LANDING GEAR POSITION INDICATOR . . .	1	
- 45	45-825078-1	. END,NOSE GEAR DOOR ACTUATOR SHAFT	2	
		/ATTACHING PARTS/		
- 46	AN515-8R14	. SCREW	1	
	AN365-832	. NUT	1	
		----*----		

CODE	EFFECTIVITY	CODE	EFFECTIVITY
1	TD-1 THRU TD-277	2	TD-278 AND AFTER

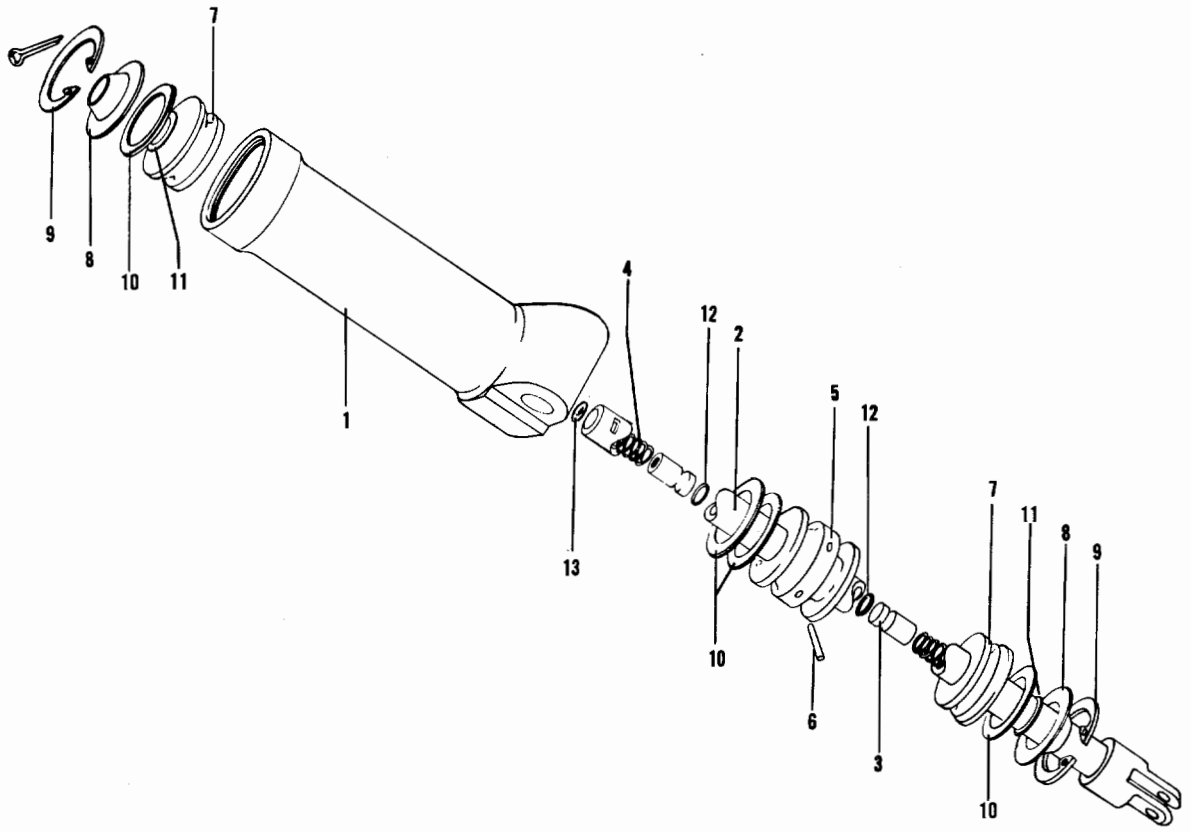

Figure 43. Nose Gear Shimmy Dampener

FIG. & INDEX NO.	PART NO.	DESCRIPTION 1 2 3 4 5 6 7	UNITS PER ASSY	USABLE ON CODE
43	35-825145	DAMPENER ASSY,NOSE GEAR SHIMMY. . . . . /SEE FIG. 41 & 41A FOR NHA/	REF	
- 1	35-825146	. BARREL,SHIMMY DAMPENER.	1	
- 2	35-825148	. ROD,SHIMMY DAMPENER PISTON.	1	
- 3	35-825152	. PISTON,FLOATING	2	
- 4	100943ZE316G	. SPRING,FLOATING PISTON.	2	
- 5	35-825147	. PISTON,SHIMMY DAMPENER.	1	
- 6	102809-093-026	. PIN,PISTON RETAINING.	1	
- 7	35-825151	. END,SHIMMY DAMPENER	2	
- 8	111190-14	. RING,PISTON SCRAPER	2	
- 9	NAS50-93	. RING,INTERNAL RETAINER.	2	
- 10	AN6227-13	. PACKING,O RING HYDRAULIC.	4	
- 11	AN6227-7	. PACKING,O RING HYDRAULIC.	2	
- 12	AN6227-1	. PACKING,O RING HYDRAULIC.	2	
- 13	AN960-3	. WASHER,FLAP	1	

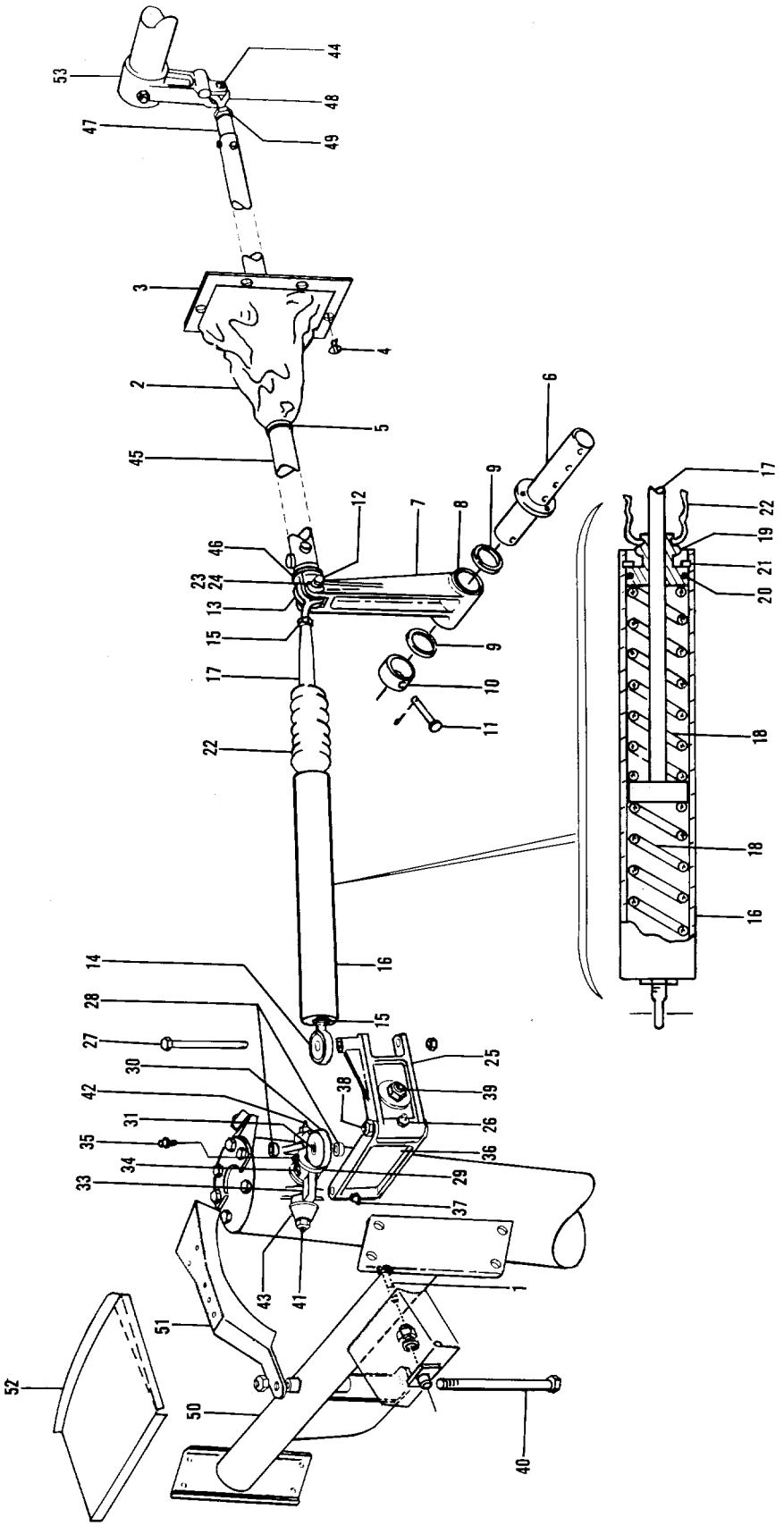

Figure 44. Nose Wheel Steering Mechanism

FIG. & INDEX NO.	PART NO.	DESCRIPTION 1 2 3 4 5 6 7	UNITS PER ASSY	USABLE ON CODE
44 -	35-825160	STEERING INSTL,NOSE WHEEL	NP	
- 1	¤35-825046	. BOLT,NOSE WHEEL STOP.	1	
	¤MS20364-428	. NUT	1	
	¤AN366F428	. NUTPLATE.	1	
- 2	¤35-825171-1	. BOOT,NOSE GEAR STEERING	1	
- 3	¤35-825170	. RING,BOOT RETAINING	1	
- 4	¤49338	. STUD.	6	
- 5	¤1/4 IN.	. WRAPLOCK /8 INCHES LONG/.	1	
- 6	¤35-825049	. SHAFT ASSY,STEERING IDLER ARM	1	
	¤35-825052	. ARM ASSY,STEERING ROD IDLER	1	
- 7	¤35-825052-2	. . ARM,IDLER	1	
- 8	¤A779	. . BEARING	1	
- 9	¤100951S032XL	. WASHER.	2	
- 10	¤35-825051	. COLLAR.	1	
- 11	MS20392-1C25	. PIN,CLEVIS.	1	
	¤MS24665-132	. PIN,COTTER.	1	
	35-825160-601	. LINK ASSY,FWD NOSE WHEEL STEERING /SUPERSEDES 35-825160 SA2/ /ATTACHING PARTS/	1	
- 12	¤AN24-25/M/	. BOLT.	1	
- 13	¤105740X-ZL0104	. BUSHING	2	
	¤AN960-416L	. WASHER.	3	
	¤AN320-4	. NUT	1	
	¤MS24665-132	. PIN,COTTER.	1	
		----*----		
	¤35-825161	. . LINK ASSY,NOSE GEAR STEERING.	1	
- 14	¤HM4U	. . . END,ROD /SUPERSEDES HM4/.	1	
- 15	¤AN316-4R	. . . NUT	2	
- 16	¤35-825165	. . . BARREL ASSY,NOSE GEAR STEERING.	1	
- 17	¤35-825163	. . . SHAFT ASSY,NOSE GEAR STEERING	1	
- 18	¤100943YD302C	. . . SPRING.	2	
- 19	¤35-825164	. . . BEARING,FLEXIBLE STEERING LINK.	1	
- 20	¤AN6227B13	. . . O RING.	1	
- 21	¤NAS50-87	. . . RING,RETAINING.	1	
- 22	¤3686	. . . BOOT.	1	
	¤35-825162	. . . END ASSY,FLEXIBLE STEERING LINK	1	
- 23	¤35-825162-2	. . . . EYE	1	
- 24	¤LS4	. . . . BEARING	1	
	¤35-825173	. . LINK ASSY,NOSE GEAR STEERING.	1	
- 25	¤35-825173-2	. . . LINK,NOSE GEAR STEERING	1	
- 26	¤MS15001-4	. . . FITTING	1	
	¤35-825006	. . EYE ASSY,NOSE GEAR STEERING SWIVEL. /ATTACHING PARTS/	1	
- 27	¤AN174-24A/M/	. . BOLT /SUPERSEDES NAS54A24/.	1	
	¤AN960-416	. . WASHER.	3	
	¤MS20365-428	. . NUT	1	
- 28	¤35-825053	. . SPACER.	2	
	¤MS20002C7	. . WASHER.	1	
- 29	¤100951X063YH	. . WASHER.	1	
	¤AN320-5/M/	. . NUT	1	
	MS24665-134	. . PIN,COTTER.	1	
		----*----		
- 30	¤35-825006-2	. . . EYE,NOSE GEAR STEERING SWIVEL	1	
- 31	¤LS4	. . . BEARING	1	
- 32	¤1736	. . . FITTING /SUPERSEDES AN287-1/.	1	
	¤35-825007	. . YOKE ASSY,NOSE GEAR STEERING.	1	
- 33	¤35-825007-2	. . . YOKE,NOSE GEAR STEERING	1	
- 34	¤NAS76A7-020	. . . BUSHING	1	
- 35	¤1736	. . . FITTING /SUPERSEDES AN287-1/.	1	
	¤35-825035	. . LINK ASSY,NOSE GEAR STEERING IDLER CROSS.	1	
- 36	¤35-825035-2	. . . LINK,NOSE GEAR STEERING IDLER CROSS	1	
- 37	¤MS15001-4	. . . FITTING	1	
- 38	¤NAS54-16/M/	. . BOLT.	1	
	¤AN960-416	. . WASHER.	2	
	¤AN310-4	. . NUT	1	
	¤MS24665-132	. . PIN,COTTER.	1	

FIG. & INDEX NO.	PART NO.	DESCRIPTION 1 2 3 4 5 6 7	UNITS PER ASSY	USABLE ON CODE
44 - 39	¤35-825046	. . BOLT,NOSE GEAR STOP	1	
	¤MS20364-428	. . NUT	2	
- 40	¤AN174-34/M/	. BOLT,CROSS LINK ATTACHING . . . . . /SUPERSEDES NAS54-34/	1	
	¤AN960-416L	. WASHER.	4	
	¤AN310-4	. NUT	1	
	¤MS24665-132	. PIN,COTTER.	1	
- 41	¤35-825005	. BOLT ASSY,STEERING YOKE ATTACHING	1	
- 42	¤1736	. . FITTING /SUPERSEDES AN287-1/.	1	
	¤AN960-516L	. WASHER.	2	
- 43	¤35-825045	. STOP,NOSE GEAR.	1	
	¤AN310-5	. NUT	1	
	MS24665-134	. PIN,COTTER.	1	
	¤35-825044-4	. ROD ASSY,AFT NOSE GEAR STEERING . . . . . /ATTACHING PARTS/	1	
- 44	¤AN4-13A/M/	. BOLT.	1	
	¤AN960-416	. WASHER.	2	
	¤MS20365-428	. NUT	1	
		----*----		
- 45	35-825044-6	. . TUBE.	1	
- 46	¤35-820045	. . END,ROD	1	
- 47	35-825097	. . SLEEVE.	1	
- 48	¤MD46-15	. . END,ROD	1	
- 49	¤AN316-6R	. . NUT	1	
	¤AN960-616L	. . WASHER.	1	
- 50	¤95-410030-25	SUPPORT ASSY,NOSE WHEEL STRAIGHTENER.	1	
- 51	96-820030	TRACK,NOSE GEAR STRAIGHTENER.	1	
- 52	96-410032-35	BRACKET,NOSE GEAR STRAIGHTENER.	1	

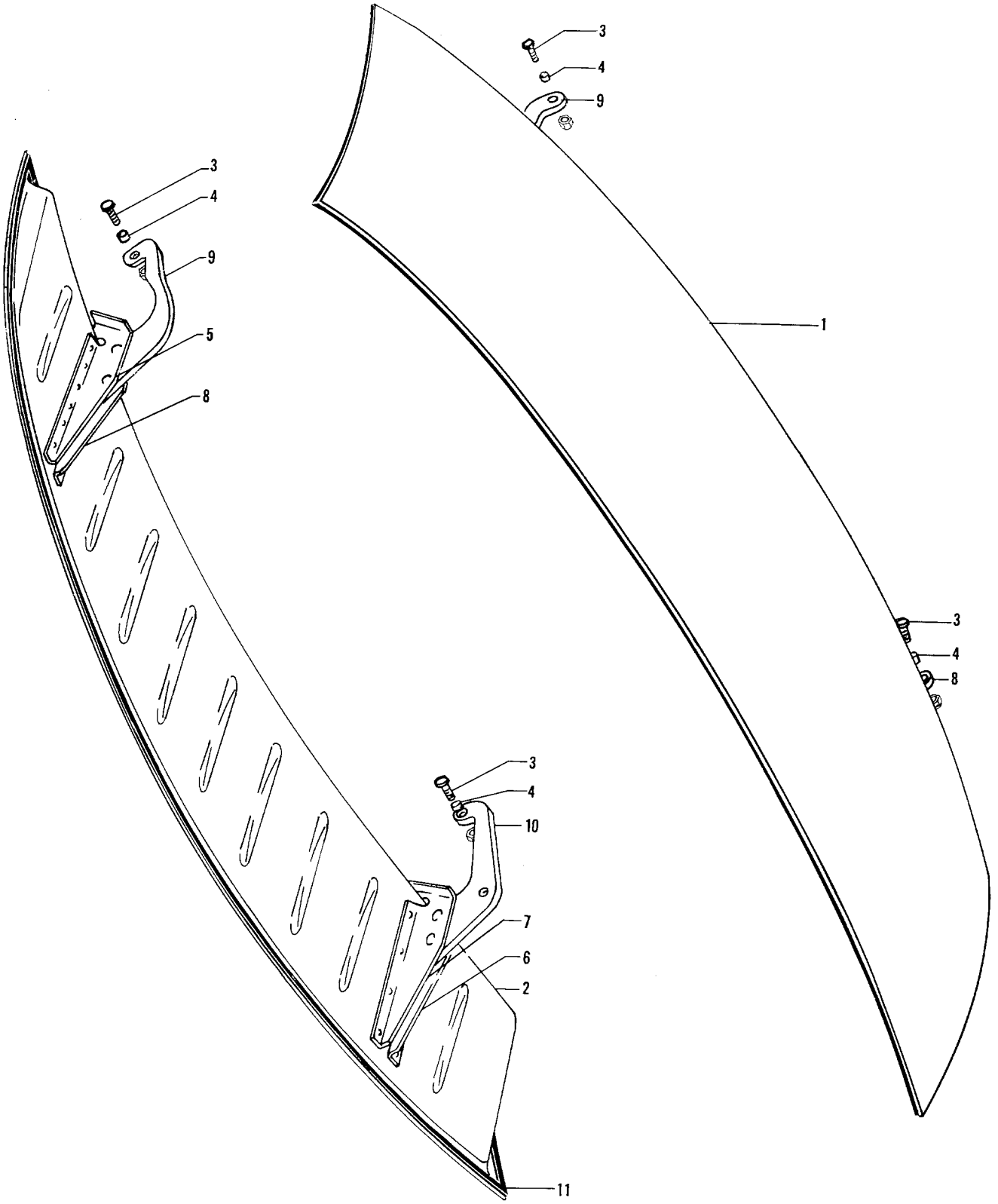

Figure 45. Nose Landing Gear Door

FIG. & INDEX NO.	PART NO.	DESCRIPTION 1 2 3 4 5 6 7	UNITS PER ASSY	USABLE ON CODE
		DOOR INSTL,NOSE WHEEL LH /SEE FIG. 8 FOR NHA/ .		
		DOOR INSTL,NOSE WHEEL RH /SEE FIG. 8 FOR NHA/ .		
45 - 1	95-410031-19	. DOOR ASSY,LH.	1	
- 2	95-410031-20	. DOOR ASSY,RH.	1	
		/ATTACHING PARTS/		
- 3	AN3-6A	. BOLT.	2	
- 4	105739S-ZG0250	. BUSHING	2	
	AN960-10	. WASHER.	2	
	AN365-1032	. NUT	2	
		----*----		
- 5	95-410031-11	. . SUPPORT,HINGE LH.	1	
- 6	95-410031-12	. . SUPPORT,HINGE RH.	1	
- 7	95-410031-13	. . SUPPORT,HINGE LH.	1	
- 8	95-410031-14	. . SUPPORT,HINGE RH.	1	
- 9	95-410031-17	. . HINGE,NOSE WHEEL DOOR FWD	1	
- 10	35-410077-12	. . HINGE,NOSE WHEEL DOOR AFT	1	
		/ATTACHING PARTS/		
	AN525-8	. . SCREW	2	
	AN960-8	. . WASHER.	2	
	MS20365-832	. . NUT	2	
		----*----		
- 11	95-410031-7	. . STRIP,RUB	1	

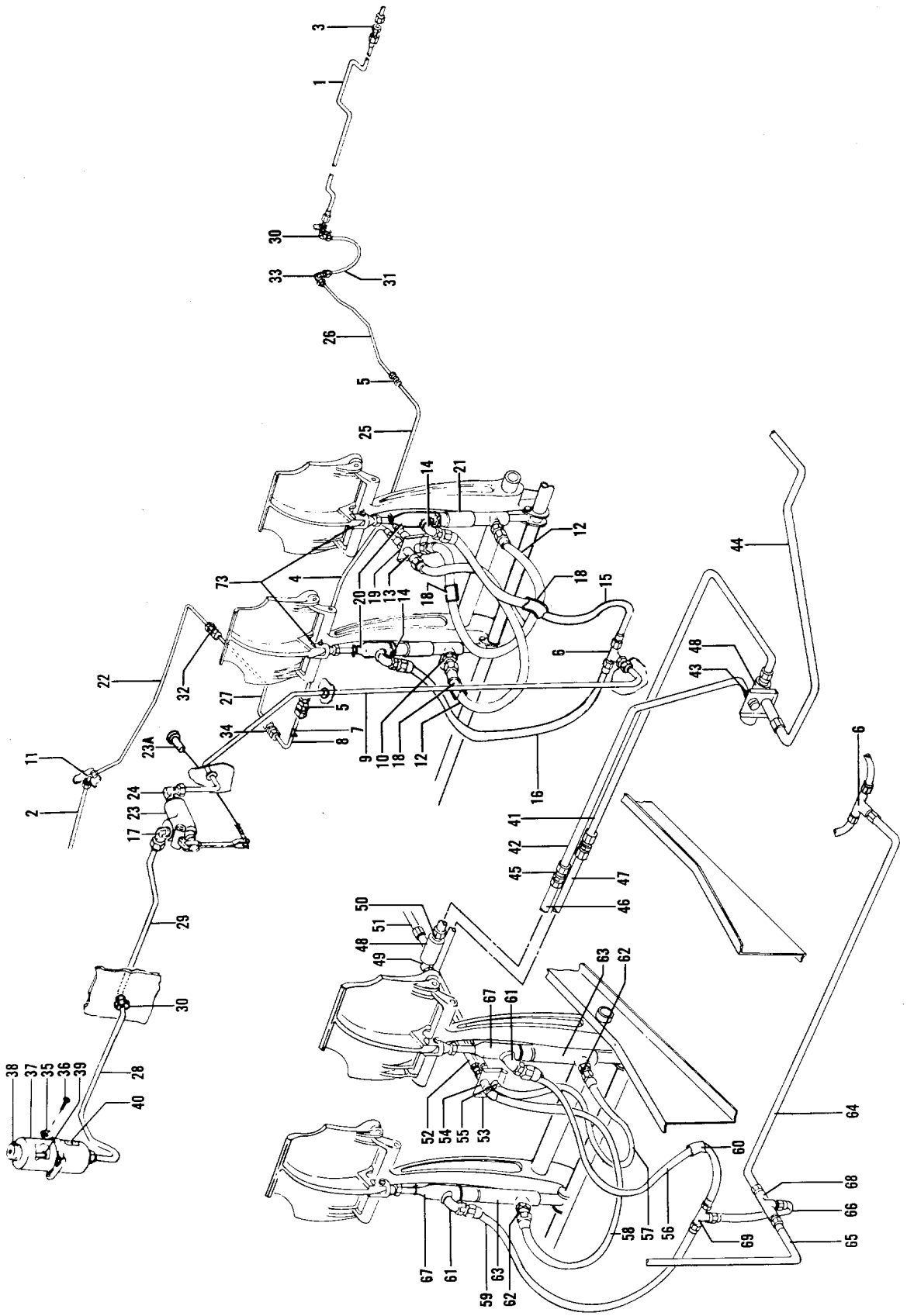

Figure 46. Hydraulic Brake Plumbing

FIG. & INDEX NO.	PART NO.	DESCRIPTION 1 2 3 4 5 6 7	UNITS PER ASSY	USABLE ON CODE
		PLUMBING INSTL,SINGLE HYDRAULIC BRAKE		
		PLUMBING INSTL,DUAL HYDRAULIC BRAKE		
46 - 1	35-815006-12	. TUBE ASSY,HYDRAULIC BRAKE LH.	1	5
	95-814005-37	. TUBE ASSY,HYDRAULIC BRAKE LH.	1	6
- 2	35-815006-13	. TUBE ASSY,HYDRAULIC BRAKE RH.	1	5
	95-814005-38	. TUBE ASSY,HYDRAULIC BRAKE RH.	1	6
- 3	AN837-4D	. ELBOW	2	5
	AN833-4D	. ELBOW	2	6
	AN924-4D	. NUT	2	
	AN960-716	. WASHER.	2	
	AN743-6	. BRACKET	2	
		/ATTACHING PARTS/		
	AN515-8-7	. SCREW	1	
	AN960-8	. WASHER.	1	
	AN365-832	. NUT	1	
		----*----		
	AN742-6C	. CLAMP	2	
		/ATTACHING PARTS/		
	AN520-10-8	. SCREW	1	
	AN960-10	. WASHER.	1	
	AN365-1032	. NUT	1	
		----*----		
	AN743-6	. BRACKET	1	
		/ATTACHING PARTS/		
	AN515-8-7	. SCREW	1	
	AN960-8	. WASHER.	1	
	AN365-832	. NUT	1	
		----*----		
	AN742-6C	. CLAMP	1	
		/ATTACHING PARTS/		
	AN520-10-8	. SCREW	1	
	AN960-10	. WASHER.	1	
	AN365-1032	. NUT	1	
		----*----		
- 4	35-815048	. TUBE ASSY	1	
- 5	AN815-4D	. UNION	2	
- 6	AN834-4D	. TEE	1	
- 7	789-4	. CLIP.	2	
		/ATTACHING PARTS/		
	AN515-8-7	. SCREW	2	
	AN960-8	. WASHER.	2	
	AN365-832	. NUT	2	
		----*----		
- 8	95-814005-3	. TUBE ASSY	1	
	95-814005-21	. TUBE ASSY	1	1
	95-814005-23	. TUBE ASSY	1	1
- 9	95-814005-25	. TUBE ASSY	1	7
	95-814005-31	. TUBE ASSY	1	6
- 10	AN832-4D	. UNION	1	
	AN960-716	. WASHER.	1	
- 11	AN837-4D	. ELBOW	1	
	AN960-716	. WASHER.	2	
- 12	MS28741-4-0107	. HOSE ASSY	2	
- 13	AN837-4D	. ELBOW	2	
	AN924-4D	. NUT	2	
	AN960D716	. WASHER.	2	
- 14	AN823-4	. ELBOW	4	
- 15	MS28741-4-0152	. HOSE ASSY	1	
- 16	MS28741-4-0156	. HOSE ASSY	1	
- 17	AN816-4D	. ELBOW	1	
- 18	106242-10-00800	. TUBING.	4	
- 19	35-815037	. BRACKET	1	
		/ATTACHING PARTS/		
	AN3-4A	. BOLT.	2	
	AN960-10	. WASHER.	2	
		----*----		
- 20	35-815006-24	. COVER,MASTER CYLINDER	2	

FIG. & INDEX NO.	PART NO.	DESCRIPTION 1 2 3 4 5 6 7	UNITS PER ASSY	USABLE ON CODE
46 - 21	VV-15-625	CYLINDER ASSY,BRAKE MASTER /SEE FIG. 47/	2	
		/ATTACHING PARTS/		
	AN3-10	BOLT	2	
	AN960-10	WASHER	2	
	AN310-3	NUT	2	
	AN380-2-2	PIN,COTTER	2	
		----*----		
	AN911-1	NIPPLE	1	
	AN822-4D	ELBOW	1	
	AN365-1032	NUT	2	
	AN960-10L	WASHER	2	
	AN960-10	WASHER	2	
- 22	95-814005-5	TUBE ASSY	1	
- 23	A-53T	VALVE ASSY,PARKING BRAKE /SEE FIG. 47A/	1	
- 23A	95-940011-5	CONTROL ASSY,PARKING BRAKE VALVE	1	
- 24	AN822-4D	ELBOW	1	
- 25	35-815069	TUBE ASSY	1	
- 26	35-815095	TUBE ASSY	1	
- 27	95-814005-9	TUBE ASSY	1	
	95-814005-13	TUBE ASSY	1	1
	95-814005-27	TUBE ASSY	1	7
- 28	95-814005-29	TUBE ASSY	1	6
- 29	95-814005-33	TUBE ASSY	1	6
- 30	AN833-4D	ELBOW	2	
	AN960-716	WASHER	2	
	AN924-4D	NUT	2	
- 31	35-815006-8	TUBE ASSY,HYDRAULIC BRAKE	1	
- 32	AN815-4D	UNION	2	
- 33	AN821-4D	ELBOW	1	
	AN742-6C	CLAMP	1	
		/ATTACHING PARTS/		
	AN515-8-14	SCREW	1	
	100696D-ZL016	SPACER	1	
	AN960-8	WASHER	1	
		----*----		
- 34	AN832-4D	ELBOW	1	
	AN960-716	WASHER	3	
- 35	766-4	CLAMP	1	
	35-815180	RESERVOIR ASSY,BRAKE FLUID	1	
		/ATTACHING PARTS/		
- 36	AN520-10-10	SCREW	1	
	AN960-10	WASHER	1	
	AN365-1032	NUT	1	
		----*----		
- 37	112136-4	. CAN ASSY,BRAKE FLUID	1	
- 38	35-815180-2	. CAP	1	
	AN515-6-40	. SCREW	1	
- 39	35-815180-6	. SPACER	1	
	100951DD032VA	. WASHER	1	
	AN960-6	. WASHER	1	
	AN365-632	. NUT	1	
- 40	404-180074	. PLACARD,BRAKE FLUID RESERVOIR	1	
- 41	95-810019-11	TUBE ASSY	1	3
	95-810019-37	TUBE ASSY	1	4
- 42	95-810019-9	TUBE ASSY	1	
- 43	AN832-4D	UNION	1	
	AN960-716	WASHER	2	
	AN924-4D	NUT	2	
- 44	95-810019-19	TUBE ASSY	1	
- 45	AN815-4D	UNION	2	
- 46	95-810019-7	TUBE ASSY	1	
- 47	95-810019-13	TUBE ASSY	1	3
	95-810019-35	TUBE ASSY	1	4
- 48	A-22	VALVE,SHUTTLE /SEE FIG. 47B/	2	
- 49	AN822-4D	ELBOW	3	
- 50	AN816-4D	NIPPLE	1	
- 51	95-810019-17	TUBE ASSY	1	
- 52	95-810019-15	TUBE ASSY	1	3

FIG. & INDEX NO.	PART NO.	DESCRIPTION 1 2 3 4 5 6 7	UNITS PER ASSY	USABLE ON CODE
46 - 53	35-815037	BRACKET /ATTACHING PARTS/	1	3
	AN520-10-8	SCREW	2	
	AN960-10	WASHER	2	
		----*----		
- 54	AN837-4D	ELBOW	1	3
	95-810019-39	ELBOW	1	4
- 55	AN832-4D	UNION	1	3
	AN833-4D	ELBOW	2	4
	AN960-716	WASHER	2	
	AN924-4D	NUT	2	
- 56	MS28741-4-0126	HOSE ASSY	1	
- 57	MS28741-4-0125	HOSE ASSY /SUPERCEDES MS28741-4-0110/	1	3
	MS28741-4-0107	HOSE ASSY	1	4
- 58	MS28741-4-0126	HOSE ASSY	1	3
	MS28741-4-0107	HOSE ASSY	1	4
- 59	MS28741-4-0120	HOSE ASSY	1	
- 60	106242-10	TUBE	4	
- 61	AN822-4D	ELBOW	2	3
	AN823-4S	ELBOW	2	4
- 62	AN823-4D	ELBOW	2	
- 63	VV-15-625	CYLINDER ASSY,MASTER /SEE FIG. 47/	2	
	95-810019-1	TUBE ASSY	1	1
- 64	95-810019-21	TUBE ASSY	1	2
	95-810019-3	TUBE ASSY	1	1
- 65	95-810019-23	TUBE ASSY	1	2
	95-810019-5	TUBE ASSY	1	1
- 66	95-810019-25	TUBE ASSY	1	2
- 67	35-815006-24	COVER,MASTER CYLINDER	2	
- 68	AN824-4D	TEE	1	
- 69	AN804-4D	TEE	1	
	AN960-716	WASHER	1	
	AN924-4D	NUT	1	

CODE	EFFECTIVITY	CODE	EFFECTIVITY
1	TD-1 THRU TD-452	2	TD-453 AND AFTER
3	TD-1 THRU TD-499	4	TD-500 AND AFTER
5	TD-1 THRU TD-533	6	TD-534 AND AFTER
7	TD-453 THRU TD-533		

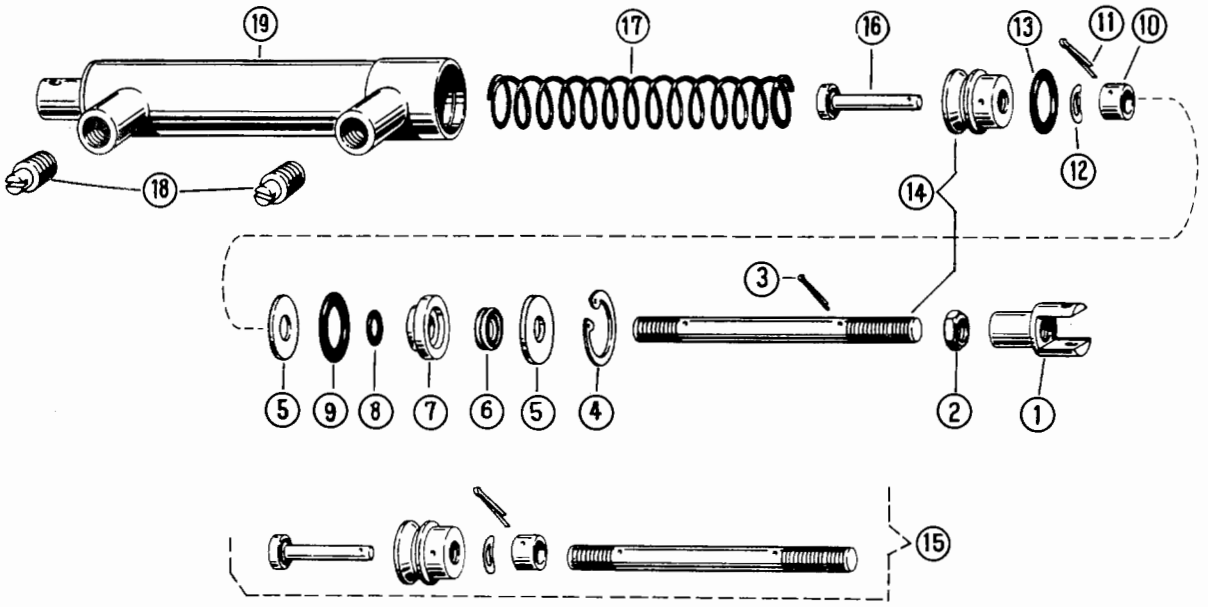

Figure 47. Brake Master Cylinder

FIG. & INDEX NO.	PART NO.	DESCRIPTION 1 2 3 4 5 6 7	UNITS PER ASSY	USABLE ON CODE
47	VV-15-625	MASTER CYLINDER,BRAKE /SEE FIG. 46 FOR NHA/	4	
- 1	A-57G-105	CLEVIS	1	
- 2	AN316-4	NUT	1	
- 3	AN380C2-2	PIN,COTTER	1	
- 4	5000-68	RING,SNAP	1	
- 5	A-57G-107	WASHER,RETAINING	2	
- 6	109010	WIPER,EQUIFLEX ROD	1	
- 7	A-57G-118	GUIDE,PISTON	1	
- 8	AN6227-5	O RING	1	
- 9	AN6227-10	O RING	1	
- 10	A-57G-109	STOP,VALVE	1	
- 11	AN380C2-2	PIN,COTTER	1	
- 12	3536-18	SPRING,VALVE	1	
- 13	AN6227-9	O RING	1	
- 14	A-57G-102	PISTON & ROD ASSY	1	
- 15	A-57G-103	PISTON & PUSH ROD ASSY	1	
- 16	A-57G-113	VALVE ASSY	1	
- 17	A-57G-111	SPRING	1	
- 18	1604-40	PLUG	2	
- 19	A-57G-104	CYLINDER ASSY	1	

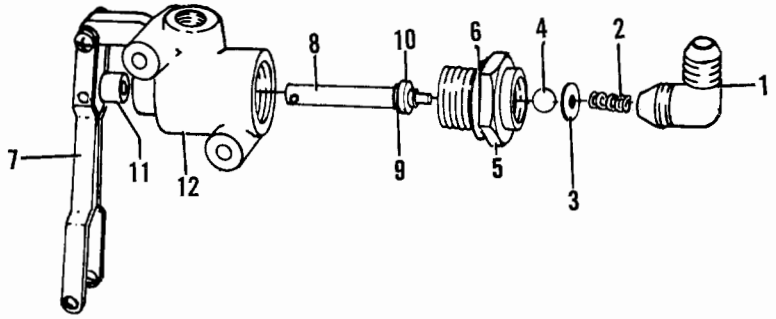

Figure 47A. Parking Brake Valve

FIG. & INDEX NO.	PART NO.	DESCRIPTION 1 2 3 4 5 6 7	UNITS PER ASSY	USABLE ON CODE
47A-	A-53T	VALVE ASSY,PARKING BRAKE /SEE FIG. 46 FOR NHA/.	1	
- 1	A-194-35	. ELBOW	1	
- 2	A-110-99	. SPRING.	1	
- 3	A-117-133	. WASHER.	1	
- 4	A-134-9	. BALL.	1	
- 5	A-102-29	. SEAT.	1	
- 6	HL-200	. GASKET.	1	
- 7	A-104-188	. ARM ASSY.	1	
- 8	A-164-454	. PLUNGER	1	
- 9	HL-338	. O RING.	1	
- 10	A-129-48	. RETAINER.	1	
- 11	A-150-126	. SPACER.	1	
- 12	A-101-353	. HOUSING	1	

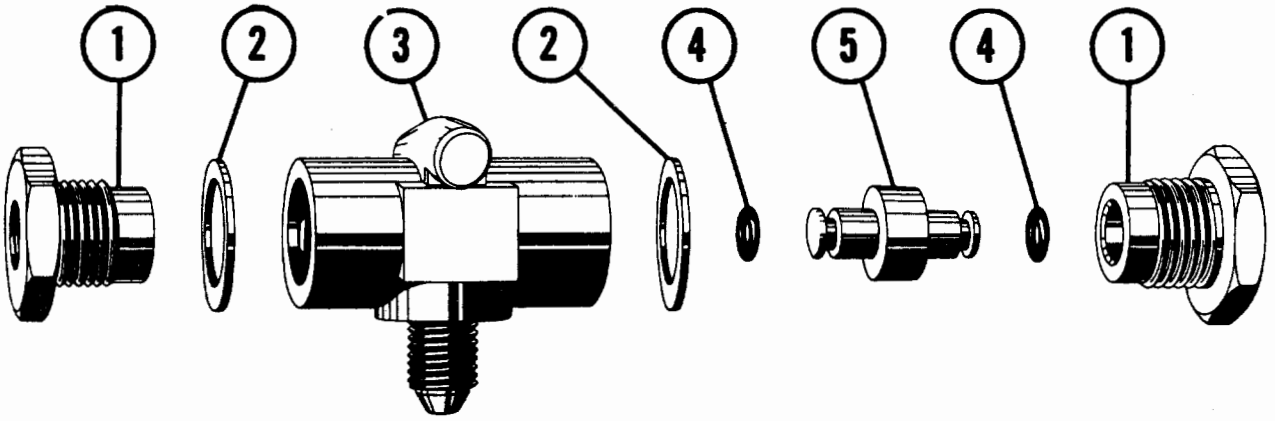

Figure 47B. Brake Shuttle Valve

FIG. & INDEX NO.	PART NO.	DESCRIPTION 1 2 3 4 5 6 7	UNITS PER ASSY	USABLE ON CODE
47B-	A-22	VALVE,SHUTTLE /SEE FIG. 46 FOR NHA/	2	
- 1	A-102-15	FITTING,END	2	
- 2	HL-5	GASKET	2	
- 3	A-101-22	BODY,VALVE	1	
- 4	HL-214	O RING	2	
- 5	HL-837	PISTON	1	

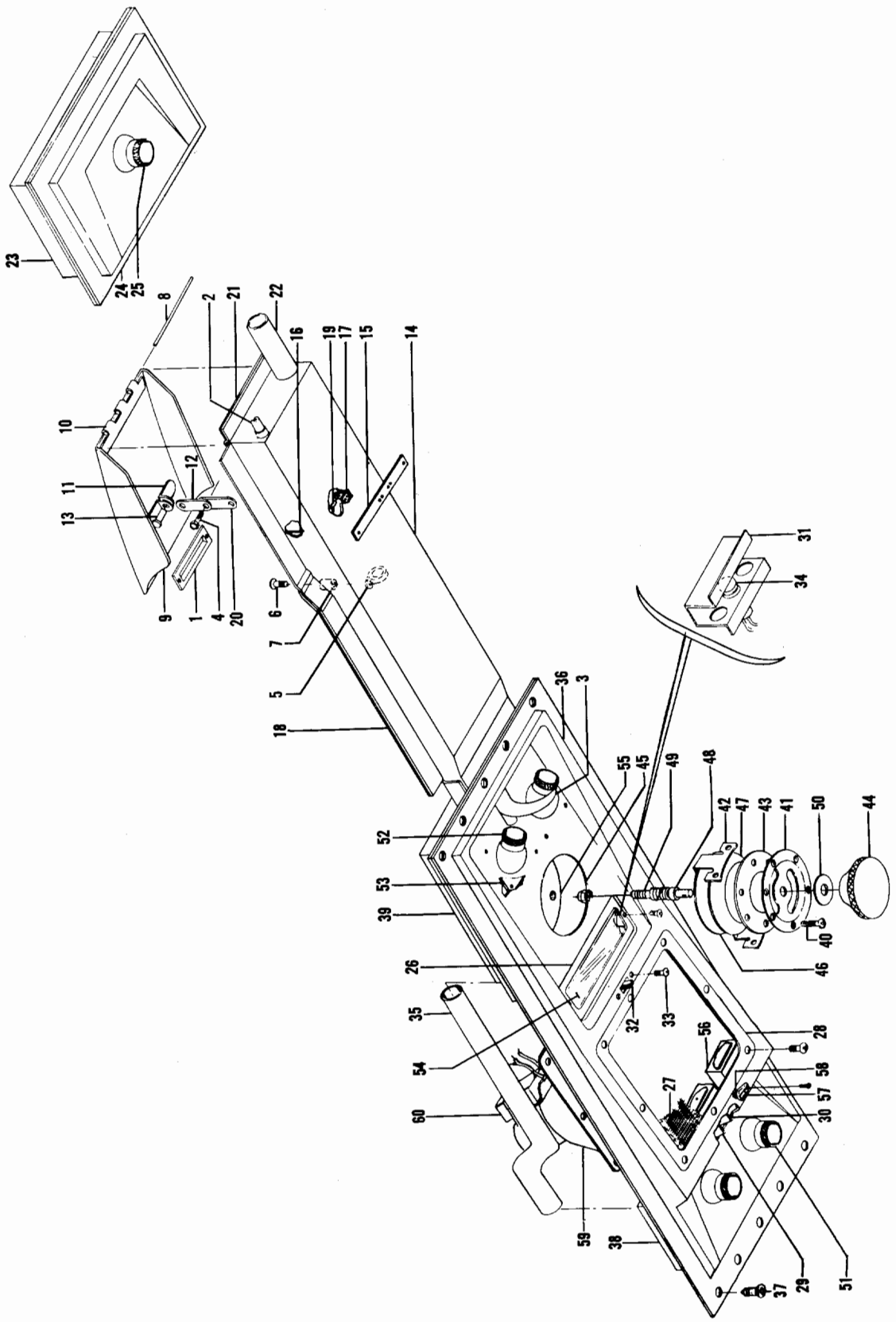

Figure 47C. Fresh Air Ducts (TD-453 thru TD-637)

FIG. & INDEX NO.	PART NO.	DESCRIPTION 1 2 3 4 5 6 7	UNITS PER ASSY	USABLE ON CODE
47C-	35-550562-33	FRESH AIR DUCT INSTL,5 PLACE.	NP	1
	35-550562-35	FRESH AIR DUCT INSTL,4 PLACE.	NP	1
- 1	¤35-550562-97	. STRIP,STALL	1	1
- 2	¤35-550562-21	. TUBE.	1	1
- 3	¤95-380007	. CONTROL ASSY.	1	1
- 4	¤35-550562-85	. BOLT.	1	1
	¤AN960-10	. WASHER.	2	1
	¤MS20365-1032	. NUT /SUPERSEDES AN365-1032/	1	1
- 5	¤AN742-4	. CLAMP	1	1
		/ATTACHING PARTS/		
- 6	AN515-10R	. SCREW	1	
- 7	100696D-ZV014	. SPACER.	1	
	¤AN960-10	. WASHER.	1	
		----*----		
	¤35-550562-607	. SCOOP ASSY.	1	1
		/ATTACHING PARTS/		
- 8	¤AN253-2-375	. PIN,HINGE	1	
		----*----		
- 9	¤35-550562-51	. . SCOOP	1	1
- 10	¤35-550562-91	. . HINGE	1	1
- 11	¤AN743-13	. . BRACKET	2	1
- 12	¤35-550562-87	. . LINK,AIR SCOOP.	1	1
		/ATTACHING PARTS/		
- 13	AN393	. . PIN	1	
	AN960	. . WASHER.	1	
	¤MS24665-132	. . COTTER PIN /SUPERSEDES AN380-2-2/	1	
		----*----		
	35-550562-63	. DUCT ASSY,5 PLACE	1	1
	35-550562-65	. DUCT ASSY,4 PLACE	1	1
	35-550562-55	. . PAN ASSY,5 PLACE.	1	1
	35-550562-57	. . PAN ASSY,4 PLACE.	1	1
	35-550562-37	. . . PAN,5 PLACE	1	1
- 14	35-550562-39	. . . PAN,4 PLACE	1	1
- 15	35-550562-43	. . . PLATE	1	1
- 16	35-550562-67	. . . PAD	2	1
- 17	¤AN743-13	. . . BRACKET	2	1
- 18	¤35-550562-61	. . COVER	1	1
- 19	AN393	. PIN	1	1
	¤MS24665-132	. COTTER PIN /SUPERSEDES AN380-2-2/	1	1
- 20	¤35-550562-87	. LINK.	1	1
- 21	35-550562-41	. HINGE,HALF.	1	1
- 22	35-550562-59	. TUBE,5 PLACE.	1	1
	95-554036-75	. DUCT ASSY,5 PLACE	1	1
- 23	95-554036-77	. . COVER	1	1
- 24	¤95-554036-69	. . PAN	1	1
- 25	¤82120-501	. . VALVE	1	1
		/ATTACHING PARTS/		
	NAS384-8-6	. . SCREW	4	
	A1778-8Z1	. . NUT	4	
		----*----		
	35-550561-39	. OVERHEAD PANEL INSTL.	NP	1
- 26	35-550561-9	. . RETAINER,LENS	1	1
- 27	¤35-344169	. . GRILL,OVERHEAD SPEAKER.	1	1
- 28	¤35-344152	. . FRAME,OVERHEAD SPEAKER.	1	1
		/ATTACHING PARTS/		
	NAS387-6	. . SCREW	8	
	¤AN960-6	. . WASHER.	8	
	¤MS20365-632	. . NUT /SUPERSEDES AN365-632/.	8	
		----*----		
	35-550561-607	. . LIGHT & DUCT ASSY	1	1
	35-550561-45	. . . REFLECTOR ASSY.	1	1
- 29	35-550561-13	. . . . REFLECTOR	1	1
- 30	35-550561-47	. . . . BAFFLE.	1	1
- 31	35-550561-15	. . . REFLECTOR	1	1
	35-550561-611	. . . SWITCH & LIGHT ASSY	1	1

FIG. & INDEX NO.	PART NO.	DESCRIPTION 1 2 3 4 5 6 7	UNITS PER ASSY	USABLE ON CODE
47C- 32	¤SS32-1	. . . . SWITCH,OVERHEAD LIGHT	1	1
		/ATTACHING PARTS/		
- 33	AN515-4	. . . . SCREW	2	
	¤MS20365-440	. . . . NUT /SUPERSEDES AN365-440/.	2	
		----*----		
- 34	¤303 BULB	. . . . BULB.	5	1
- 35	35-550561-37	. . . TUBE.	2	1
- 36	¤35-550561-35	. . . SHELL,OVERHEAD PANEL.	1	1
		/ATTACHING PARTS/		
- 37	NAS384-6	. . . SCREW	10	
	¤AN960-6	. . . WASHER.	10	
		----*----		
- 38	35-550561-5	. . . BOX,FORWARD	1	1
- 39	35-550561-33	. . . BOX,AFT	1	1
	¤35-550055	. . . VALVE ASSY,AIR OUTLET	1	1
		/ATTACHING PARTS/		
- 40	¤NAS384-6-6P	. . . SCREW	6	
	A6052-6Z1	. . . NUT	6	
		----*----		
- 41	35-550059	. . . . CUP,AIR VALVE	1	1
- 42	¤35-550061	. . . . BRACKET	1	1
- 43	35-550060	. . . . COLLAR.	1	1
- 44	¤35-550057	. . . . KNOB.	1	1
		/ATTACHING PARTS/		
- 45	¤AN320-4	. . . . NUT	1	
	¤AN960-416L	. . . . WASHER.	1	
	¤MS24665-132	. . . . COTTER PIN /SUPERSEDES AN380-2-2/ . . .	1	
		----*----		
- 46	35-550062	. . . . DISC ASSY	1	1
	35-550062-2	. . . . . DISC.	1	1
	35-550075	. . . . . NUT	1	1
- 47	¤35-550063	. . . . SEAL.	1	1
	AN960-416	. . . . WASHER.	1	1
- 48	35-550058-6	. . . . COLLAR.	1	1
- 49	35-550058-2	. . . . SCREW	1	1
	AN565A6H4	. . . . SCREW,SET	1	1
- 50	¤102808-4D012	. . . . WASHER.	1	1
- 51	¤B2120-501	. . . VALVE,AIR OUTLET.	2	1
- 52	¤B2155-501	. . . VALVE,AIR OUTLET.	2	1
		/ATTACHING PARTS/		
	NAS384-8-6	. . . SCREW	4	
	A1778-8Z1	. . . NUT	4	
		----*----		
- 53	35-550561-29	. . . GASKET.	4	1
- 54	¤35-550561-11	. . . LENS,OVERHEAD LIGHT	1	1
- 55	35-550561-49	. . . BLOCK	1	1
- 56	35-550561-43	. . . LENS.	2	1
- 57	¤35-364022	. . . SHUTTER	1	1
		/ATTACHING PARTS/		
	AN515-6	. . . SCREW	1	
	¤MS20365-632	. . . NUT /SUPERSEDES AN365-632/.	1	
		----*----		
- 58	¤100943YN012R	. . . SPRING.	1	1
	¤35-344158	SPEAKER ASSY,OVERHEAD	1	1
- 59	¤S10340	. SPEAKER	1	1
- 60	A3005	. TRANSFORMER	1	1
		/ATTACHING PARTS/		
	AN515-6-5	. SCREW	2	
	¤AN935-6	. WASHER.	2	
		----*----		

CODE EFFECTIVITY

1 TD-453 THRU TD-637

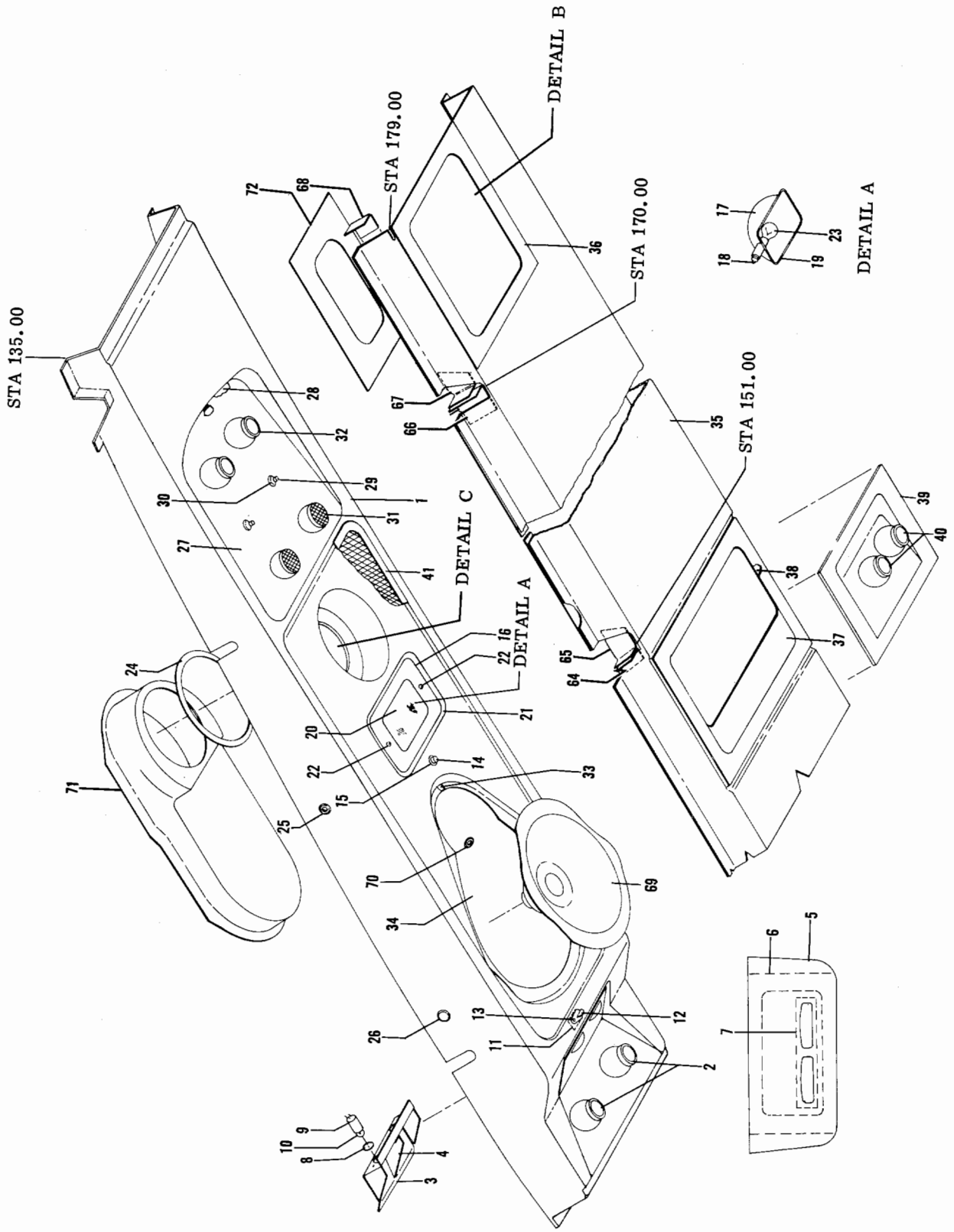

Figure 47D. Fresh Air Ducts (TD-638 And After)
(Sheet 1 of 2 Sheets)

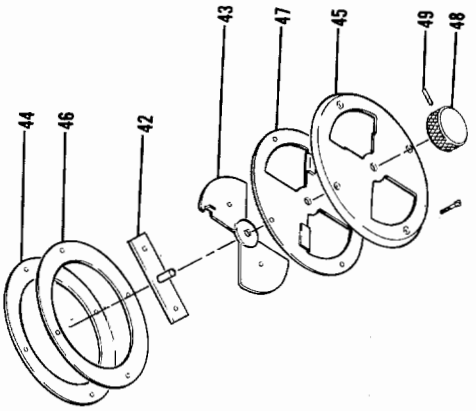

DETAIL C

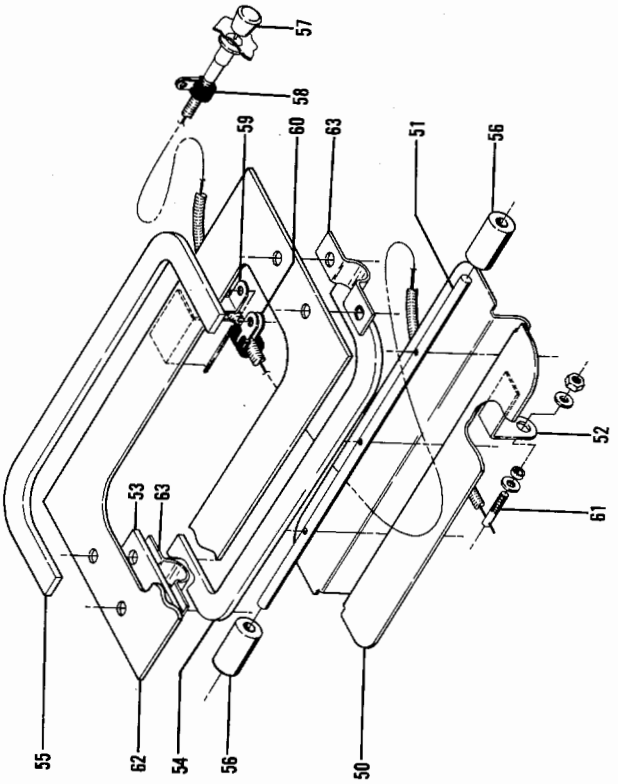

DETAIL B

Figure 47D. Fresh Air Ducts (TD-638 And After)
(Sheet 2 of 2 Sheets)

FIG. & INDEX NO.	PART NO.	DESCRIPTION 1 2 3 4 5 6 7	UNITS PER ASSY	USABLE ON CODE
47D-	96-550013-1	PANEL INSTL,4 OUTLETS & 2 LIGHTS OVERHEAD . . .	NP	3
	96-550016-1	PANEL INSTL,4 OUTLETS & 2 LIGHTS OVERHEAD . . .	NP	4
	96-550013-3	PANEL INSTL,4 OUTLETS NO LIGHTS OVERHEAD. . . .	NP	3
	96-550016-3	PANEL INSTL,4 OUTLETS NO LIGHTS OVERHEAD. . . .	NP	4
	96-550013-5	PANEL INSTL,5 OUTLETS & 2 LIGHTS OVERHEAD . . .	NP	3
	96-550016-5	PANEL INSTL,5 OUTLETS & 2 LIGHTS OVERHEAD . . .	NP	4
	96-550013-7	PANEL INSTL,5 OUTLETS NO LIGHTS OVERHEAD. . . .	NP	3
	96-550016-7	PANEL INSTL,5 OUTLETS NO LIGHTS OVERHEAD. . . .	NP	4
	96-550013-9	PANEL INSTL,6 OUTLETS & 2 LIGHTS OVERHEAD . . .	NP	3
	96-550016-9	PANEL INSTL,6 OUTLETS & 2 LIGHTS OVERHEAD . . .	NP	4
	96-550013-601	. PANEL ASSY,OVERHEAD FRESH AIR /2 OUTLETS/ . .	1	1
	96-550013-604	. PANEL ASSY,OVERHEAD FRESH AIR /2 OUTLETS/ . .	1	2
	96-550013-624	. PANEL ASSY,OVERHEAD FRESH AIR /2 OUTLETS/ . .	1	4
- 1	96-550013-17	. . SHELL,OVERHEAD PANEL FWD.	1	1
	96-550013-93	. . SHELL,OVERHEAD PANEL FWD.	1	2
	96-550013-147	. . SHELL,OVERHEAD PANEL FWD.	1	4
- 2	¤2373	. . VALVE ASSY,PILOT & COPILOT FRESH AIR. . . .	2	5
		/ATTACHING PARTS/		
	¤NAS384-6-8P	. . SCREW	4	
	¤A1181-2-1	. . NUT /SUPERSEDES NAS446-2-1/	4	
		----*----		
	96-550013-27	. . REFLECTOR ASSY,OVERHEAD LIGHT	1	3
- 3	96-550013-29	. . . REFLECTOR,OVERHEAD LIGHT.	1	3
- 4	96-550013-31	. . . BAFFLE.	1	3
	96-550013-41	. . COVER ASSY,FWD CABIN LIGHT.	1	3
		/ATTACHING PARTS/		
	¤NAS387-632-8P	. . SCREW	2	
	¤NAS391-6P	. . WASHER.	2	
	¤NAS697A06	. . NUTPLATE.	2	
		----*----		
- 5	96-550013-43	. . . COVER,MAP LIGHT	1	3
- 6	¤96-550013-47	. . . GASKET,MAP LIGHT COVER.	1	3
- 7	¤96-550013-45	. . . LENS,RED MAP LIGHT.	1	3
	¤96-550013-83	. . GASKET.	2	3
- 8	35-550561-55	. . WASHER,LIGHT SOCKET	2	3
	95-360014-676	. . WIRE ASSY,OVERHEAD LIGHT.	1	3
	95-360002-676	. . WIRE ASSY,OVERHEAD LIGHT.	1	4
- 9	¤SC2611	. . . SOCKET,LIGHT BULB	2	3
- 10	¤303	. . . BULB,OVERHEAD LIGHT	2	3
- 11	¤96-550013-69	. . LENS,OVERHEAD LIGHT	1	3
- 12	¤35-364022	. . SHUTTER,OVERHEAD LIGHT.	1	3
		/ATTACHING PARTS/		
	AN515C6R12	. . SCREW	1	
- 13	100943YN012R	. . SPRING.	1	
	¤MS20365-632	. . NUT	1	
		----*----		
- 14	¤L18336-1	. . SWITCH,DOME LIGHT	1	5
- 15	¤96-550013-51	. . GASKET,LIGHT SWITCH	1	5
- 16	¤96-550013-53	. . GASKET,DOME LIGHT	1	5
	¤B3550-1	. . LIGHT ASSY,DOME	1	5
		/ATTACHING PARTS/		
	¤NAS387-632-8P	. . SCREW	4	
	¤NAS697A06	. . NUTPLATE.	4	
		----*----		
- 17	A3552	. . . REFLECTOR & LAMPHOLDER ASSY	1	5
- 18	A3554-3	. . . CONTACT ASSY.	1	5
- 19	A3657A	. . . GASKET.	1	5
- 20	A3551	. . . LENS /WHITE DIFFUSING/.	1	5
- 21	A3553	. . . RETAINER.	1	5
- 22	¤6/32X1/2	. . . SCREW	2	5
- 23	¤303	. . BULB,DOME LIGHT	1	5
- 24	¤96-550013-37	. . GASKET,PAN.	1	5
- 25	¤MS35489-9	. . GROMMET,LIGHT WIRING.	1	5
- 26	¤51067	. . PLUG,BUTTON	1	5
	96-550013-607	. PANEL ASSY,OVERHEAD FRESH AIR /NO LIGHTS/ . .	1	
	96-550013-608	. PANEL ASSY,OVERHEAD FRESH AIR /WITH LIGHTS/ .	1	

FIG. & INDEX NO.	PART NO.	DESCRIPTION 1 2 3 4 5 6 7	UNITS PER ASSY	USABLE ON CODE
47D- 27	96-550013-95	. . PAN,THIRD AND FOURTH SEAT AIR	1	
	96-550013-97	. . PAN,THIRD AND FOURTH SEAT AIR	1	
		/ATTACHING PARTS/		
	¤NAS387-632-8P	. SCREW	8	
	¤NAS697A06	. . NUTPLATE.	8	
		----*----		
- 28	¤96-530013-83	. . GASKET,OVERHEAD FRESH AIR PAN	1	
- 29	¤L18366-1	. . SWITCH,READING LIGHT.	2	
- 30	¤96-550013-51	. . GASKET,READING LIGHT SWITCH	2	
- 31	¤1870	. . LIGHT,READING	2	
		/ATTACHING PARTS/		
	¤NAS387-632-8P	. . SCREW	4	
	A1181-2-1	. . NUT /SUPERSEDES NAS446-2-1/	4	
		----*----		
	95-360014-677	. . WIRE ASSY,READING LIGHTS.	1	
- 32	¤2373	. . VALVE ASSY,FRESH AIR.	2	
		/ATTACHING PARTS/		
	¤NAS387-632-8P	. . SCREW	4	
	A1181-2-1	. . NUT /SUPERSEDES NAS446-2-1/	4	
		----*----		
- 33	¤96-550013-33	. GASKET,SPEAKER DOME	1	5
- 34	¤96-550013-49	. DOME,SPEAKER.	1	5
	96-550013-613	. DOOR ASSY,OVERHEAD FRESH AIR FIFTH & 6TH SEAT	1	5
- 35	96-550013-21	. . SHELL	1	5
- 36	96-550013-103	. . COVER	1	5
	¤NAS387-632-8	. . SCREW	12	5
	¤NAS697A06	. . NUTPLATE.	12	5
- 37	¤96-550013-85	. DOOR /USED WITH OUTLETS/.	1	5
	96-550013-75	. DOOR /USED WITHOUT OUTLETS/	1	5
		/ATTACHING PARTS/		
	NAS384-6P	. SCREW	5	
	NAS395-6-1	. NUT	5	
		----*----		
- 38	96-550013-77	. GASKET,PAN.	1	5
	96-550013-615	. PANEL ASSY,FIFTH SEAT FRESH AIR	1	5
	96-550013-616	. PANEL ASSY,FIFTH & SIXTH SEAT FRESH AIR . . .	1	5
		/ATTACHING PARTS/		
	NAS384-6P	. SCREW	4	
	NAS395-6-1	. NUTPLATE.	4	
		----*----		
- 39	96-550013-99	. . PAN,1 AIR OUTLET.	1	5
	96-550013-101	. . PAN,2 AIR OUTLETS	1	5
	96-550013-91	. . GASKET,PAN.	1	5
- 40	¤2373	. . VALVE ASSY,AIR OUTLET	2	5
		/ATTACHING PARTS/		
	¤NAS387-632-8	. . SCREW	4	
	A1181-2-1	. . NUTPLATE /SUPERSEDES NAS446-2-1/.	4	
		----*----		
- 41	¤96-554011	. GRILL ASSY,OVERHEAD PANEL RADIO SPEAKER . . .	1	5
		/ATTACHING PARTS/		
	¤NAS387-632-8P	. SCREW	8	
	MF1000-632	. NUTPLATE.	8	
		----*----		
	96-554011-1	. . FRAME,OVERHEAD SPEAKER GRILL.	1	5
	96-554011-7	. . GRILL,OVERHEAD SPEAKER.	1	5
	96-550015-601	. VALVE ASSY,CABIN EXHAUST VENT	1	5
		/ATTACHING PARTS/		
	¤NAS387-832-8P	. SCREW	4	
	MK2000-08	. NUTPLATE.	4	
		----*----		
- 42	96-550015-3	. . WELD ASSY,CABIN EXHAUST VALVE	1	5
- 43	96-550015-9	. . SHUTTER,CABIN EXHAUST VALVE	1	5
- 44	96-550015-11	. . RING,BACKUP	1	5
- 45	96-550015-13	. . PLATE,CABIN EXHAUST VALVE	1	5
- 46	¤35-410154-3	. . SHIM,LEATHER.	1	5
- 47	35-410455-1	. . COVER,PLATE LEATHER	1	5

FIG. & INDEX NO.	PART NO.	DESCRIPTION 1 2 3 4 5 6 7	UNITS PER ASSY	USABLE ON CODE
47D-	95-550015-23	. KNOB ASSY,CABIN EXHAUST VENT.	1	5
- 48	95-550015-17	. . KNOB.	1	5
	96-554013	. . PLACARD,CABIN EXHAUST VENT KNOB	1	5
		. SCREW,SET		5
	96-440015-603	DOOR ASSY,OVERHEAD AIR SHUT OFF	1	2
- 50	96-440015-23	. DOOR.	1	2
- 51	96-440015-17	. SHAFT	1	2
- 52	96-440015-37	. BRACKET	1	2
		/ATTACHING PARTS/		
	AN515-6R	. SCREW	3	
	¤MS20365-632	. NUT	3	
		----*----		
- 53	96-440015-21	SPACER.	1	2
- 54	96-440015-27	SEAL,LOWER.	1	2
- 55	96-440015-29	SEAL,UPPER.	1	2
- 56	96-440015-31	BEARING	2	2
- 57	¤35-380051-3	CONTROL,OVERHEAD FRESH AIR.	1	2
		/ATTACHING PARTS/		
- 58	AN742-3	CLAMP	AR	
	¤AN515-10R8	SCREW	AR	
	¤MS20365-1032	NUT	AR	
		----*----		
- 59	¤AN743-13	BRACKET	1	2
- 60	AN742-3	CLAMP	1	2
		/ATTACHING PARTS/		
	¤AN515-10R10	SCREW	1	
	¤MS20365-1032	NUT	1	
		----*----		
- 61	¤35-550520	PIN	1	2
	102933S4ZJ0093	SPACER.	1	2
	¤AN960-10	WASHER.	1	2
	¤MS20365-1032	NUT	1	2
- 62	96-440015-13	DOUBLER,OVERHEAD DOOR	1	2
- 63	96-440015-19	CLAMP	2	2
		/ATTACHING PARTS/		
	¤AN515-8R8	SCREW	4	
	¤MS20365-832	NUT	4	
		----*----		
- 64	96-550013-63	CLIP,STA 151 FWD.	2	
- 65	96-550013-61	CLIP,STA 151 AFT LH	1	
	96-550013-62	CLIP,STA 151 AFT RH	1	
- 66	96-550013-59	CLIP,STA 170 FWD LH	1	
	96-550013-60	CLIP,STA 170 FWD RH	1	
- 67	96-550013-57	CLIP,STA 170 AFT LH	1	
	96-550013-58	CLIP,STA 170 AFT RH	1	
- 68	96-550013-55	CLIP,STA 179.	2	
- 69	¤5869064B	SPEAKER,OVERHEAD PANEL RADIO.	1	
- 70	MS35489-4	GROMMET,RADIO SPEAKER WIRE.	1	
- 71	¤96-550013-35	PAN,OVERHEAD FRESH VENT	1	
- 72	96-440015-5	DOUBLER,STA 179	1	

CODE	EFFECTIVITY	CODE	EFFECTIVITY
1	TD-638 THRU TD-643	2	TD-644 THRU TD-707
3	TD-638 THRU TD-707	4	TD-708 AND AFTER
5	TD-638 AND AFTER		

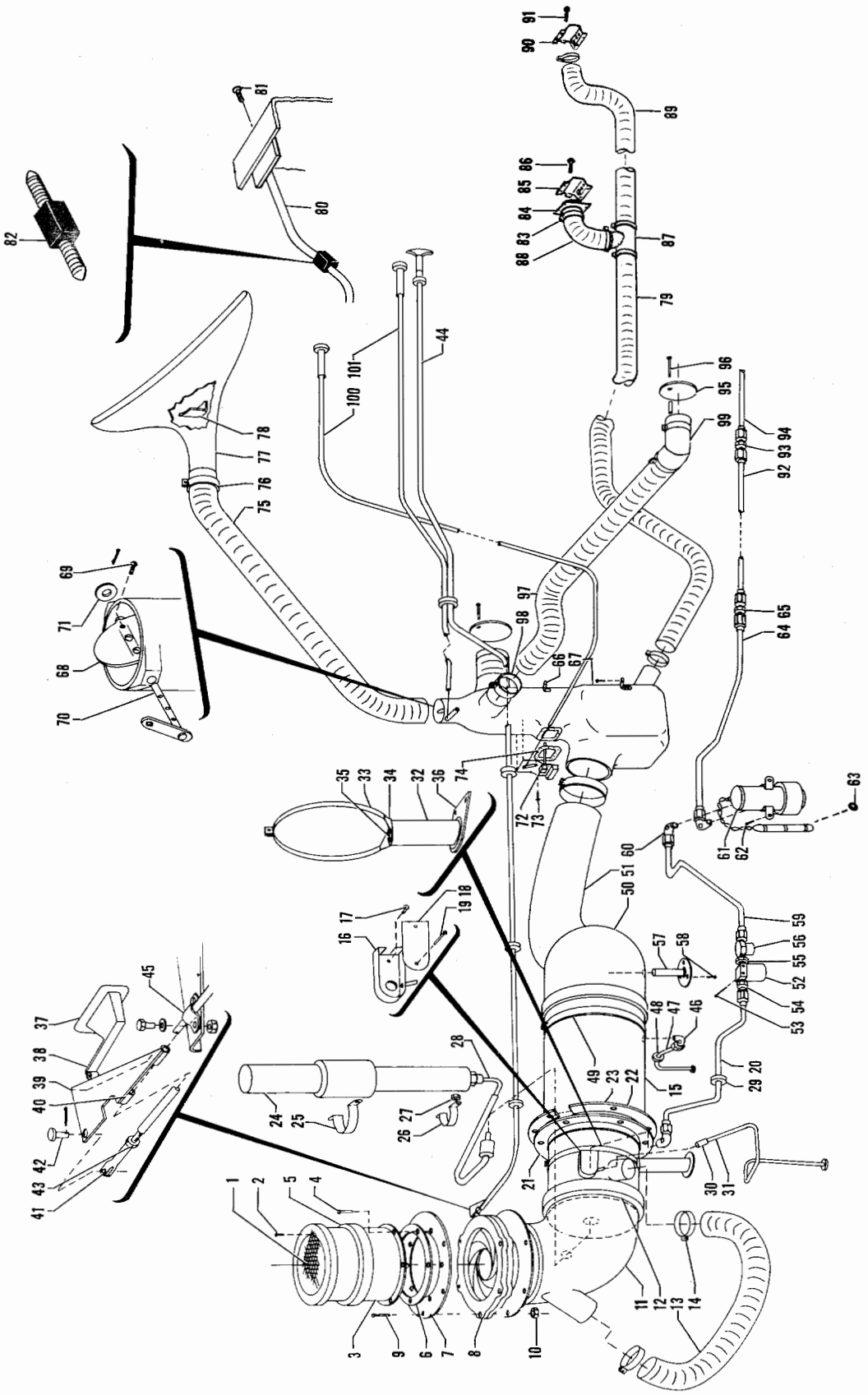

Figure 48. Heat & Vent (TD-1 thru TD-452)

FIG. & INDEX NO.	PART NO.	DESCRIPTION 1 2 3 4 5 6 7	UNITS PER ASSY	USABLE ON CODE
		HEAT & VENT INSTL,CABIN		1
48 - 1	50-554106	. SCREEN,AIR INLET	1	1
		/ATTACHING PARTS/		
- 2	AN515-8	. SCREW	6	
	AN960-8	. WASHER	6	
	AN365-832	. NUT	6	
		----*----		
- 3	M-4861H-1A	. BLOWER,AIR /SEE FIG. 48B/	1	1
		/ATTACHING PARTS/		
- 4	AN507-832R	. SCREW	6	
	AN960-8	. WASHER	6	
	AN365-832	. NUT	6	
		----*----		
- 5	320-62-5.06S	. CLAMP	1	1
	1044-513S	. CLAMP	1	1
- 6	414-183963-9	. GASKET	1	1
- 7	95-554022	. BRACKET,HEATER BLOWER MOUNTING	1	1
- 8	IV-40-550	. VALVE,IRIS	1	1
		/ATTACHING PARTS/		
- 9	AN3-21	. BOLT	5	
- 10	AN365-1032	. NUT	5	
		----*----		
- 11	95-554021	. PLENUM,HEATER INLET AIR	1	1
		/USED WITH 1.75 G.P.H. HEATER NOZZLE/		
	95-554021-3	. PLENUM,HEATER INLET AIR	1	1
		/USED WITH 2.00 G.P.H. HEATER NOZZLE/		
- 12	40A50	. CLAMP	2	1
- 13	111716AX3XX42	. DUCT,AIR	1	1
- 14	105798-6	. CLAMP	2	1
	95-554024	. HEATER ASSY,CABIN	1	1
- 15	D-83A28	. . HEATER,CABIN /SEE FIG. 48C/	1	1
- 16	50-555018	. . SHROUD ASSY,HEATER FUEL INLET	1	1
		/ATTACHING PARTS/		
- 17	AN501A10	. . SCREW	2	
		----*----		
- 18	50-555019	. . COVER ASSY,HEATER FUEL INLET	1	1
		/ATTACHING PARTS/		
- 19	AN520-10R22	. . SCREW	2	
	AN501A10	. . SCREW	2	
		----*----		
- 20	AN6264-4-16	. . HOSE ASSY	1	1
	AN822-4	. . ELBOW	1	1
	95-554025	. SUPPORT ASSY,CABIN HEATER	1	1
		/ATTACHING PARTS/		
	AN3-4A	. BOLT	8	
	AN960-10	. WASHER	8	
		----*----		
- 21	95-554025-1	. . SUPPORT,CABIN HEATER	1	1
- 22	95-554025-3	. . SUPPORT,CABIN HEATER	1	1
- 23	95-554026	. GASKET,CABIN HEATER SUPPORT	1	1
- 24	11C30	. IGNITION ASSY,HEATER	1	1
		/ATTACHING PARTS/		
- 25	414-183950-125	. BAND	1	
- 26	414-183950-123	. BAND	1	
- 27	414-183950-135	. SPACER	1	
	AN520-10	. SCREW	4	
	AN960-10	. WASHER	4	
		----*----		
- 28	B41C74	. LEAD ASSY,IGNITION	1	1
- 29	AN931-8513	. GROMMET	1	1
- 30	106043ZA0200	. TUBING	1	1
- 31	95-550000-35	. TUBE,HEATER IGNITION LEAD	1	1
		. SHROUD INSTL,HEATER EXHAUST		1
	95-554014-13	. . SHROUD ASSY,HEATER EXHAUST	1	1
- 32	95-554014-7	. . . WELD ASSY,HEATER EXHAUST	1	1
- 33	95-554014-9	. . . CLAMP,HEATER EXHAUST	1	1
- 34	95-554014-11	. . . GUSSET,HEATER EXHAUST	2	1
- 35	95-554015	. . . GASKET,HEATER EXHAUST	1	1
- 36	95-554014-15	. . SHIELD,HEATER EXHAUST	1	1

FIG. & INDEX NO.	PART NO.	DESCRIPTION 1 2 3 4 5 6 7	UNITS PER ASSY	USABLE ON CODE
48 - 37	MS25026-1	SWITCH,HEATER SAFETY	1	1
- 38	AN3169	ACTUATOR,AIR INLET LIMIT SWITCH	1	1
	95-554028	CAM ASSY,HEATER SWITCH CONTROL	1	1
- 39	95-554028-7	CAM,HEATER SWITCH CONTROL	1	1
- 40	95-554028-5	BUSHING,HEATER SWITCH CONTROL	1	1
- 41	95-550000-17	CLEVIS	1	1
		/ATTACHING PARTS/		
- 42	AN393-15	PIN	1	
	AN960-10	WASHER	1	
	AN380-2-2	PIN,COTTER	1	
- 43	AN345-10	NUT	1	
		----*----		
- 44	95-550000-41	CONTROL,IRIS VALVE	1	1
- 45	105019	CLAMP ASSY	1	1
		/ATTACHING PARTS/		
	AN3-11A	BOLT	2	
	AN960-10	WASHER	2	
	AN365-1032	NUT	2	
		----*----		
- 46	95-550000-39	ELBOW,HEATER	1	1
- 47	95-550000-15	TUBE ASSY,HEATER	1	1
- 48	MS35489-11	GROMMET /SUPERCEDES AN931-6-10/	2	1
- 49	105798	CLAMP	1	1
- 50	95-554011	PLENUM,HEATER OUTLET AIR	1	1
- 51	95-554012-1	DUCT ASSY,CABIN HEATER AIR	1	1
- 52	3153-00-1	VALVE,SHUTOFF /SUPERCEDES 12257-24/	1	1
	10-407	VALVE,SOLENOID OPERATED FUEL SHUTOFF	1	1
		/ALTERNATE FOR 3153-00-1/		
		/ATTACHING PARTS/		
- 53	AN520-10R	SCREW	2	
	102933D4ZM0156	SPACER	1	
	AN960-10	WASHER	2	
		----*----		
- 54	AN816-4	NIPPLE	2	1
- 55	AN911-1	NIPPLE	1	1
- 56	414-183976-15	FILTER,FUEL	1	1
- 57	112447S1C-C300T	THERMOSTAT	1	1
		/ATTACHING PARTS/		
- 58	AN515-8R8	SCREW	3	
	AN960-8	WASHER	3	
		----*----		
- 59	95-550000-19	TUBE ASSY,CABIN HEATER FUEL	1	2
	95-550000-43	TUBE ASSY,CABIN HEATER FUEL	1	3
- 60	AN822-4	ELBOW	2	2
	AN822-4	ELBOW	4	3
- 61	476439	PUMP,FUEL /SEE FIG. 48D/	1	2
		/ATTACHING PARTS/		
- 62	AN520-10R	SCREW	2	
	AN960-10	WASHER	2	
	102933F4ZM0312	SPACER	1	
		----*----		
	476439	PUMP,FUEL /SEE FIG. 48D/	2	3
		/ATTACHING PARTS/		
	AN520-10R	SCREW	3	
	AN960-10	WASHER	3	
	102933F4ZM0312	SPACER	2	
		----*----		
	95-550000-45	TUBE ASSY,FUEL PUMP	1	3
- 63	BS48199	BUTTON,PLUG	1	1
- 64	95-550000-23	TUBE ASSY,CABIN HEATER FUEL	1	1
- 65	AN815-4	UNION	1	1
	95-554019-1	PLENUM ASSY,HEATER AIR	1	1
		/ATTACHING PARTS/		
- 66	AN815-8R	SCREW	4	
	AN960-8	WASHER	2	
	AN365-832	NUT	6	
		----*----		

FIG. & INDEX NO.	PART NO.	DESCRIPTION 1 2 3 4 5 6 7	UNITS PER ASSY	USABLE ON CODE
48 - 67	95-554019-3	. . DUCT,PLENUM	1	1
- 68	95-554031	. . VALVE,DEFROSTER DUCT FLAPPER	1	1
		/ATTACHING PARTS/		
- 69	AN515DD440	. . SCREW	3	
	AN960D4L	. . WASHER	3	
	AN365D440	. . NUT	3	
		----*----		
- 70	95-554032	. . STEM ASSY,DEFROSTER DUCT VALVE	1	1
		/ATTACHING PARTS/		
- 71	AN960D416L	. . WASHER	AR	
	AN380-1-2	. . PIN,COTTER	1	
		----*----		
- 72	G714127	. THERMOSTAT	1	1
		/ATTACHING PARTS/		
- 73	AN515-8R	. SCREW	1	
	AN960-8	. WASHER	1	
- 74	95-554020	. GASKET,PLENUM	1	
	AN364-832	. NUT	1	
		----*----		
- 75	111716AX5XX-44	. DUCT,WINDSHIELD DEFROST	1	1
- 76	105798-9	. CLAMP	1	1
		. DEFROST INSTL,WINDSHIELD & DECK		1
- 77	95-554017-3	. . DUCT ASSY,DEFROST	1	1
- 78	95-554017-23	. . BAFFLE,DEFROST	1	1
	111716AX4XX-120	. . DUCT,CABIN AIR	1	4
- 79	111716AX4XX-99	. . DUCT,CABIN AIR	1	5
	95-554017-11	. . ROD ASSY,SHOCK MOUNT	1	6
		/ATTACHING PARTS/		
	AN507-632R	. . SCREW	2	
	AN960-6	. . WASHER	2	
	AN365-632	. . NUT	2	
		----*----		
- 80	95-554017-35	. . ROD ASSY,SHOCK MOUNT LH	1	7
	95-554017-37	. . ROD ASSY,SHOCK MOUNT RH	1	7
		/ATTACHING PARTS/		
- 81	AN507-6R	. . SCREW	2	
		----*----		
- 82	A321	. . . MOUNT,SHOCK	1	7
	105798-7	. CLAMP	2	4
- 83	105798-7	. CLAMP	5	5
- 84	95-550000-9	. DIFFUSER ASSY,AIR	1	1
- 85	35-550042	. DEFLECTOR,REAR SEAT AIR	1	1
		/ATTACHING PARTS/		
- 86	AN515-8R	. SCREW	4	
	AN960-8	. WASHER	4	
		----*----		
- 87	95-550000-55	. TUBE ASSY,REAR SEAT CABIN AIR	1	5
- 88	111716AX4XX-11	. DUCT,REAR SEAT CABIN AIR	1	5
- 89	111716AX4XX70	. DUCT,REAR SEAT CABIN AIR	1	5
- 90	95-550000-49	. DEFLECTOR,REAR SEAT CABIN AIR	1	5
		/ATTACHING PARTS/		
- 91	AN515-8R	. SCREW	4	
	AN960-8	. WASHER	4	
		----*----		
- 92	95-550000-21	. TUBE ASSY,HEATER FUEL	1	1
- 93	AN815-4	. UNION	1	1
- 94	95-550000-33	. TUBE ASSY,HEATER FUEL	1	1
- 95	95-554016	. PLATE ASSY,AIR DIFFUSER	2	1
		/ATTACHING PARTS/		
- 96	AN515-8R	. SCREW	3	
	AN960-8	. WASHER	3	
	102933D3ZM1375	. SPACER	3	4
	102933D3ZM0750	. SPACER	3	5
	AN365-832	. NUT	3	
		----*----		
- 97	111716AX4XX32	. DUCT,CABIN AIR	1	1

FIG. & INDEX NO.	PART NO.	DESCRIPTION 1 2 3 4 5 6 7	UNITS PER ASSY	USABLE ON CODE
48 - 98	105798-7	CLAMP	2	1
- 99	95-550000-31	ELBOW,VENT	1	1
-100	95-940011-1	CONTROL ASSY,PUSH PULL	1	1
-101	95-940011-3	CONTROL ASSY,PUSH PULL	1	1

CODE	EFFECTIVITY	CODE	EFFECTIVITY
1	TD-1 THRU TD-452	2	TD-1 THRU TD-202
3	TD-203 THRU TD-452	4	TD-1 THRU TD-302
5	TD-303 THRU TD-452	6	TD-1 THRU TD-173
7	TD-174 THRU TD-452		

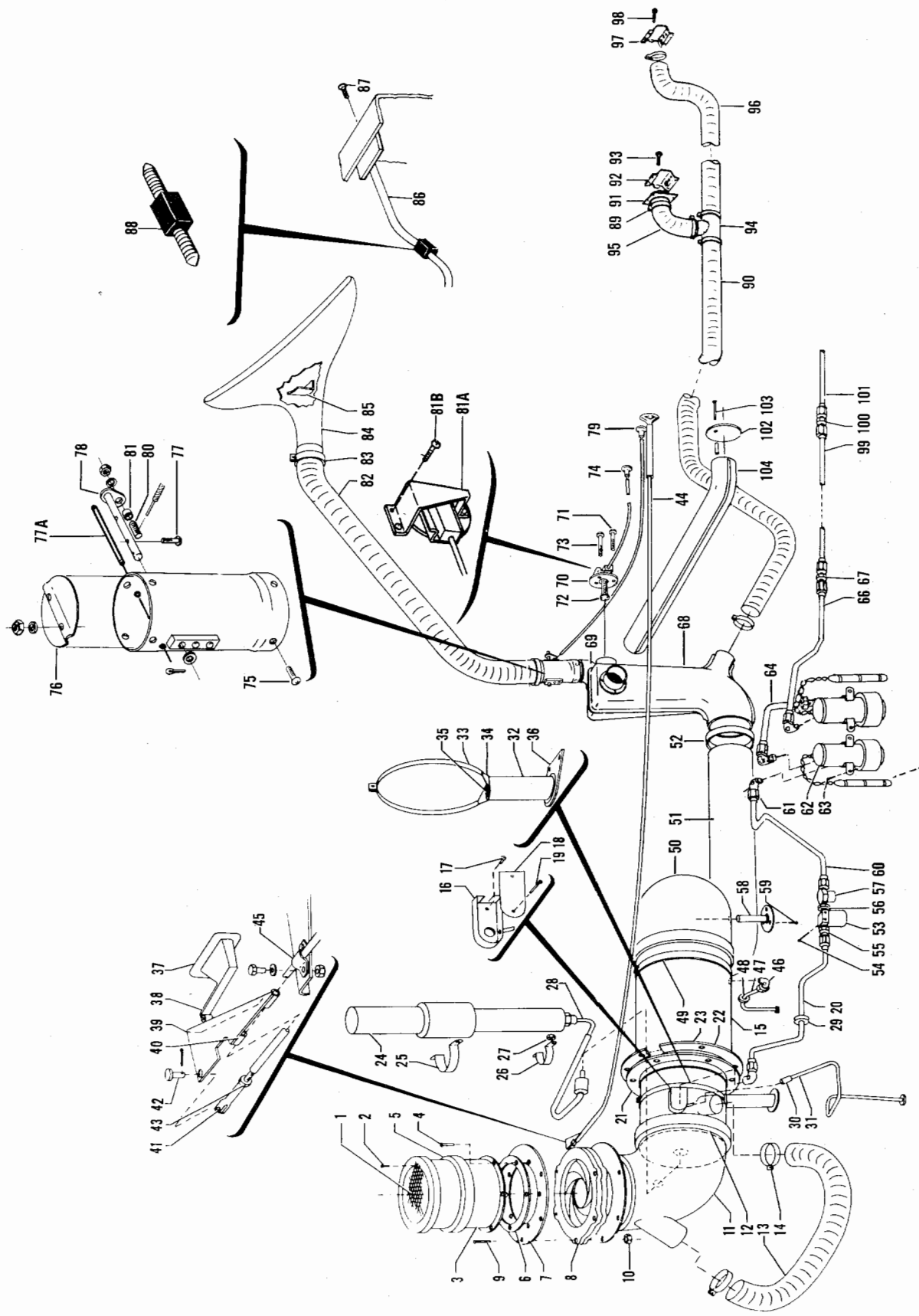

Figure 48A. Heat & Vent (TD-453 & After)
(Sht. 1 of 2 Shts.)

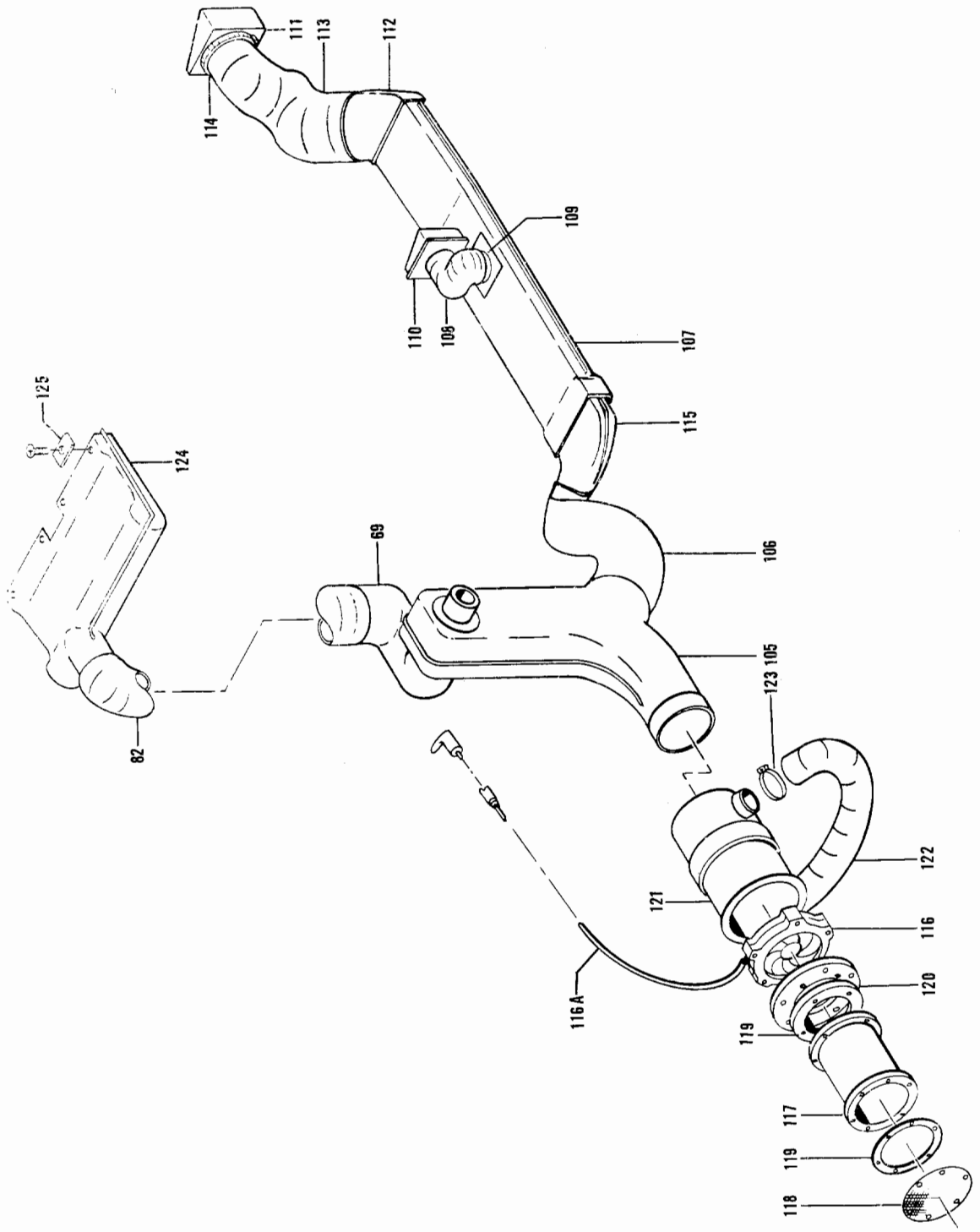

Figure 48A. Heat & Vent (TD-534 And After) (Sheet 2 of 2 Sheets)

FIG. & INDEX NO.	PART NO.	DESCRIPTION 1 2 3 4 5 6 7	UNITS PER ASSY	USABLE ON CODE
48A-	95-550001-3	HEAT AND VENT INSTL,CABIN/35,000 BTU WO/BLOWER/	NP	4
	95-550001-1	HEAT AND VENT INSTL,CABIN/50,000 BTU WO/BLOWER/	NP	4
	95-550002-195	HEAT AND VENT INSTL,CABIN /50,000 BTU W/BLOWER/	NP	3
	95-550002-197	HEAT AND VENT INSTL,CABIN/35,000 BTU WO/BLOWER/	NP	3
	95-550002-221	HEAT AND VENT INSTL,CABIN /50,000 BTU W/BLOWER/	NP	7
	95-550002-223	HEAT AND VENT INSTL,CABIN/35,000 BTU WO/BLOWER/	NP	7
- 1	¤50-554106	. SCREEN,AIR INLET.	1	4
		/ATTACHING PARTS/		
- 2	AN515-8	. SCREW	6	
	¤AN960-8	. WASHER.	6	
	¤MS20365-832	. NUT /SUPERSEDES AN365-832/.	6	
		----*----		
- 3	¤M4861H1A	. BLOWER,AIR /SEE FIG. 48D/	1	4
		/ATTACHING PARTS/		
- 4	AN507-832R	. SCREW	6	
	¤AN960-8	. WASHER.	6	
	¤MS20365-832	. NUT /SUPERSEDES AN365-832/.	6	
		----*----		
- 5	320-62-506S	. CLAMP	1	4
	¤1044-513S	. CLAMP	1	4
- 6	¤414-183963-9	. GASKET.	1	4
- 7	¤95-554022	. BRACKET,HEATER BLOWER MOUNTING.	1	4
- 8	¤IV40-550	. VALVE,IRIS.	1	4
		/ATTACHING PARTS/		
- 9	AN3-21	. BOLT.	5	
- 10	¤MS20365-1032	. NUT /SUPERSEDES AN365-1032/	5	
		----*----		
- 11	¤95-554021	. PLENUM,HEATER INLET AIR	1	4
		/USED WITH 1.75 G.P.H. HEATER NOZZLE/		
	¤95-554021-3	. PLENUM,HEATER INLET AIR	1	4
		/USED WITH 2.00 G.P.H. HEATER NOZZLE/		
- 12	¤40650	. CLAMP	2	5
- 13	¤111716AX3XX42	. DUCT,AIR.	1	4
- 14	105798-6	. CLAMP	2	4
	95-554024	. HEATER ASSY,CABIN	1	5
- 15	¤D83A28	. . HEATER,CABIN /SEE FIG. 48C/	1	5
- 16	¤50-555018	. . SHROUD ASSY,HEATER FUEL INLET	1	5
		/ATTACHING PARTS/		
- 17	AN501A10	. . SCREW	2	
		----*----		
- 18	50-555019	. . COVER ASSY,HEATER FUEL INLET.	1	5
		/ATTACHING PARTS/		
- 19	AN520-10R22	. . SCREW	2	
	AN501A10	. . SCREW	2	
		----*----		
- 20	AN6264-4-16	. . HOSE ASSY	1	5
	¤AN822-4	. . ELBOW	1	5
	95-554025	. SUPPORT ASSY,CABIN HEATER	1	5
		/ATTACHING PARTS/		
	¤AN3-4A/M/	. BOLT.	8	
	¤AN960-10	. WASHER.	8	
		----*----		
- 21	¤95-554025-1	. . SUPPORT,CABIN HEATER.	1	5
- 22	¤95-554025-3	. . SUPPORT,CABIN HEATER.	1	5
- 23	¤95-554026	. GASKET,CABIN HEATER SUPPORT	1	5
- 24	¤11C30	. IGNITION ASSY,HEATER.	1	5
		/ATTACHING PARTS/		
- 25	¤414-183950-125	. BAND.	1	
- 26	¤414-183950-123	. BAND.	1	
- 27	¤414-183950-135	. SPACER.	1	
	AN520-10	. SCREW	4	
	¤AN960-10	. WASHER.	4	
		----*----		

FIG. & INDEX NO.	PART NO.	DESCRIPTION 1 2 3 4 5 6 7	UNITS PER ASSY	USABLE ON CODE
48A- 28	¤B41C74	. LEAD ASSY,IGNITION.	1	5
- 29	AN931-8S13	. GROMMET	1	5
- 30	¤106043ZA020	. TUBING.	1	5
- 31	95-550000-35	. TUBE,HEATER IGNITION LEAD	1	5
	95-554014	. SHROUD INSTL,HEATER EXHAUST	NP	5
	¤95-554014-13	. . SHROUD ASSY,HEATER EXHAUST.	1	5
- 32	¤95-554014-7	. . . WELD ASSY,HEATER EXHAUST.	1	5
- 33	¤95-554014-9	. . . CLAMP,HEATER EXHAUST.	1	5
- 34	¤95-554014-11	. . . GUSSET,HEATER EXHAUST	2	5
- 35	¤95-554015	. . . GASKET,HEATER EXHAUST	1	5
- 36	¤95-554014-15	. . SHIELD,HEATER EXHAUST	1	5
- 37	¤MS25026-1	. SWITCH,HEATER SAFETY.	1	4
- 38	¤AN3169-1	. ACTUATOR,AIR INLET LIMIT SWITCH	1	4
	¤95-554028	. CAM ASSY,HEATER SWITCH CONTROL.	1	4
- 39	95-554028-7	. . CAM,HEATER SWITCH CONTROL /ORDER 95-554028/	NP	4
- 40	95-554028-5	. . BUSHING,HEATER SWITCH CONTROL . . . . . /ORDER 95-554028/	NP	4
- 41	¤95-550000-17	. CLEVIS. . . . . /ATTACHING PARTS/	1	4
- 42	¤AN393-15	. PIN	1	
	¤AN960-10	. WASHER.	1	
	¤MS24665-132	. PIN,COTTER /SUPERSEDES AN380-2-2/	1	
- 43	¤AN345-10	. NUT	1	
		----*----		
- 44	¤95-550000-41	. CONTROL,IRIS VALVE.	1	4
- 45	105019	. CLAMP ASSY. . . . . /ATTACHING PARTS/	1	4
	¤AN3-11A/M/	. BOLT.	2	
	¤AN960-10	. WASHER.	2	
	¤MS20365-1032	. NUT /SUPERSEDES AN365-1032/	2	
		----*----		
- 46	¤95-550000-39	. ELBOW,HEATER.	1	5
- 47	95-550000-15	. TUBE ASSY,HEATER.	1	5
- 48	¤MS35489-11	. GROMMET /SUPERSEDES AN931-6-10/	2	5
- 49	¤105798	. CLAMP	1	5
- 50	¤95-554038-9	. WELD ASSY,HEATER EXIT AIR PLENUM.	1	5
- 51	95-554037-1	. DUCT,CABIN HEATER AIR	1	5
- 52	¤105798-18	. CLAMP,CABIN HEATER AIR DUCT . . . . . /SUPERSEDES 105798-13/	1	5
- 53	50-389096-3	VALVE,SHUTOFF /SUPERSEDES 12257-24,10-407 . . . & 3153-00-1/ /ATTACHING PARTS/	1	5
- 54	AN520-10R	. SCREW	2	
	102933D4ZM0156	. SPACER.	2	
	¤AN960-10	. WASHER.	2	
		----*----		
- 55	¤AN816-4	. NIPPLE.	2	5
- 56	¤AN911-1	. NIPPLE.	1	5
- 57	¤414-183976-15	. FILTER,FUEL	1	5
- 58	¤112447S1C-C300T	. THERMOSTAT. . . . . /ATTACHING PARTS/	1	5
- 59	¤AN515-832	. SCREW	3	
	¤AN960-8	. WASHER.	3	
		----*----		
- 60	95-550000-43	. TUBE ASSY,CABIN HEATER FUEL INLET	1	5
- 61	¤AN822-4	. ELBOW	4	5
- 62	476439	. PUMP,HEATER FUEL /SEE FIG. 48D/ . . . . . /ORDER 476284/	NP	1
	¤476284	. PUMP,HEATER FUEL. . . . . /ATTACHING PARTS/	2	7
- 63	AN520-10R	. SCREW	3	
	¤AN960-10	. WASHER.	3	
	¤AN936A10	. WASHER.	3	
	¤MS20365-1032	. NUT	3	
	¤AN345-10	. NUT	3	
		----*----		
- 64	95-550000-45	. TUBE ASSY,FUEL PUMP	1	5
- 65	B243109	. BUTTON,PLUG	1	5

FIG. & INDEX NO.	PART NO.	DESCRIPTION 1 2 3 4 5 6 7	UNITS PER ASSY	USABLE ON CODE
48A- 66	95-550000-23	. TUBE ASSY,CABIN HEATER FUEL	1	5
- 67	¤AN815-4	. UNION	1	5
- 68	95-554039	. PLENUM ASSY,HEATER AIR.	1	4
- 69	¤95-554041	. DUCT ASSY,DEFROSTER AIR	1	5
- 70	95-550001-7	. PLATE ASSY,CABIN AIR DIFFUSER	1	5
		/ATTACHING PARTS/		
- 71	AN507-8R	. SCREW	3	
		----*----		
- 72	¤G714127	. THERMOSTAT,HEATER	1	5
		/ATTACHING PARTS/		
- 73	AN520-10R	. SCREW	2	
	¤AN960-10	. WASHER.	2	
		----*----		
- 74	¤95-940011-3	. CONTROL ASSY,HEATER THERMOSTAT PUSH PULL. . .	1	5
	¤95-550001-15	. VALVE ASSY,DEFROSTER DUCT	1	5
		/ATTACHING PARTS/		
- 75	AN530-8R	. SCREW	4	
	NAS395-10-1	. NUT	4	
		----*----		
- 76	35-550501-20	. . VALVE,DEFROSTER DUCT.	1	5
		/ATTACHING PARTS/		
- 77	¤AN515-6R10	. . SCREW	2	
	¤AN960-6	. . WASHER.	2	
	¤MS20365-632	. . NUT /SUPERSEDES AN365-632/.	2	
		----*----		
- 77A	414-183955-111	. . PIN,DEFROSTER DUCT VALVE.	1	5
		/ATTACHING PARTS/		
	¤AN380-2-3	. . PIN,COTTER.	2	
		----*----		
- 78	95-550001-13	. . WELD ASSY,DEFROSTER VALVE CONTROL ARM . . .	1	5
- 79	¤95-940011-3	. CONTROL ASSY,DEFROSTER VALVE PUSH PULL. . . .	1	5
		/ATTACHING PARTS/		
- 80	¤35-550520	. PIN,CONTROL ATTACHMENT.	1	
- 81	¤102933S4ZJ0095	. BUSHING	1	
	¤AN960-10L	. WASHER.	1	
	¤MS20365-1032	. NUT	1	
		----*----		
- 81A	95-550001-17	. BRACKET,THERMOSTAT PROTECTOR.	1	5
		/ATTACHING PARTS/		
- 81B	AN530-8R	. SCREW	2	
		----*----		
- 82	¤111716AX5XX44	. DUCT,WINDSHIELD DEFROST /USE WITH BLOWER/ . .	1	5
	111716AX5XX52	. DUCT,WINDSHIELD DEFROST /USE WITHOUT BLOWER/.	1	5
- 83	105798-9	. CLAMP	1	5
	95-554017	. DEFROST INSTL,WINDSHIELD & DECK	NP	4
- 84	95-554017-3	. . DUCT ASSY,DEFROST	1	4
- 85	95-554017-23	. . BAFFLE,DEFROST.	1	4
- 86	¤95-554017-35	. . ROD ASSY,SHOCK MOUNT LH	1	4
	¤95-554017-37	. . ROD ASSY,SHOCK MOUNT RH	1	4
		/ATTACHING PARTS/		
- 87	AN507-6R	. . SCREW	2	
		----*----		
- 88	¤A321	. . . MOUNT,SHOCK	1	4
- 89	¤105798-12	. CLAMP /SUPERSEDES 105798-7/	5	4
- 90	¤111716AX4XX99	. DUCT,CABIN AIR.	1	4
- 91	¤95-550000-9	. DIFFUSER ASSY,AIR	1	4
- 92	¤35-550042	. DEFLECTOR,REAR SEAT AIR	1	5
		/ATTACHING PARTS/		
- 93	AN515-8R	. SCREW	4	
	¤AN960-8	. WASHER.	4	
		----*----		
- 94	95-550000-55	. TUBE ASSY,REAR SEAT CABIN AIR	1	4
- 95	¤111716AX4XX11	. DUCT,REAR SEAT CABIN AIR.	1	4
- 96	¤111716AX4XX70	. DUCT,REAR SEAT CABIN AIR.	1	4
- 97	¤95-550000-49	. DEFLECTOR,REAR SEAT CABIN AIR	1	4
		/ATTACHING PARTS/		
- 98	AN515-8R	. SCREW	4	
	¤AN960-8	. WASHER.	4	
		----*----		

FIG. & INDEX NO.	PART NO.	DESCRIPTION 1 2 3 4 5 6 7	UNITS PER ASSY	USABLE ON CODE
48A- 99	95-550000-21	. TUBE ASSY,HEATER FUEL	1	5
-100	¤AN815-4	. UNION	1	5
-101	95-550000-33	. TUBE ASSY,HEATER FUEL	1	5
-102	95-554016	. PLATE ASSY,AIR DIFFUSER	2	5
		/ATTACHING PARTS/		
-103	AN515-8R	. SCREW	3	
	¤AN960-8	. WASHER.	3	
	102933D3ZM0750	. SPACER.	3	
	¤MS20365-832	. NUT	3	
		----*----		
-104	95-554040	. DUCT,CABIN AIR.	1	5
-105	¤95-554039-3	. PLENUM ASSY,HEATER.	1	8
-106	95-550002-217	. DUCT,HEATER	1	8
-107	95-550002-213	. DUCT,HEATER	1	8
-108	111716AX5XX11	. DUCT,FLEXIBLE	1	8
-109	¤95-550001-33	. OUTLET ASSY,HEATER.	1	8
-110	¤95-550000-9	. DIFFUSER ASSY	1	8
-111	¤95-550001-35	. DEFLECTOR,REAR SEAT AIR	1	8
-112	¤95-550001-31	. ADAPTER	1	8
-113	¤111716AX5XX44	. DUCT,FLEXIBLE	1	8
-114	105798-9	. CLAMP	2	8
-115	95-550001-37	. DUCT,HEATER	1	8
-116	¤95-550002-17	. IRIS VALVE ASSY	1	8
	95-550002-15	. . IRIS VALVE.	1	8
	95-550002-13	. . BRACKET	1	8
-116A	95-550002-33	. CONTROL	1	8
-117	¤M4861H1A	. BLOWER ASSY,HEATER.	1	8
	95-550002-9	. CYLINDER ASSY,HEATER/WO/BLOWER/	1	8
-118	¤50-554106	. SCREEN,HEATER AIR INLET	1	8
		/ATTACHING PARTS/		
	AN3-	. BOLT.	6	
	¤AN960-10	. WASHER.	6	
	¤MS20365-1032	. NUT /SUPERSEDES AN365-1032/	6	
		----*----		
-119	¤414-183963-9	. GASKET,HEATER BLOWER.	2	8
-120	¤95-554022	. BRACKET,BLOWER MOUNTING	1	8
-121	¤95-550015-3	. PLENUM ASSY,HEATER.	1	8
-122	¤111716AX3XX42	. DUCT,FLEXIBLE	2	8
-123	105798-6	. CLAMP	2	8
-124	¤96-550010-1	. DUCT ASSY,DEFROST	1	3
	96-554022	. DUCT ASSY,DEFROST	1	7
		/ATTACHING PARTS/		
	AN507-632R	. SCREW	4	
-125	50-554100	. SPACER.	4	
		----*----		

CODE	EFFECTIVITY	CODE	EFFECTIVITY
1	TD-453 THRU TD-707	2	DELETED
3	TD-534 THRU TD-707	4	TD-453 THRU TD-533
5	TD-453 AND AFTER	6	DELETED
7	TD-708 AND AFTER	8	TD-534 AND AFTER

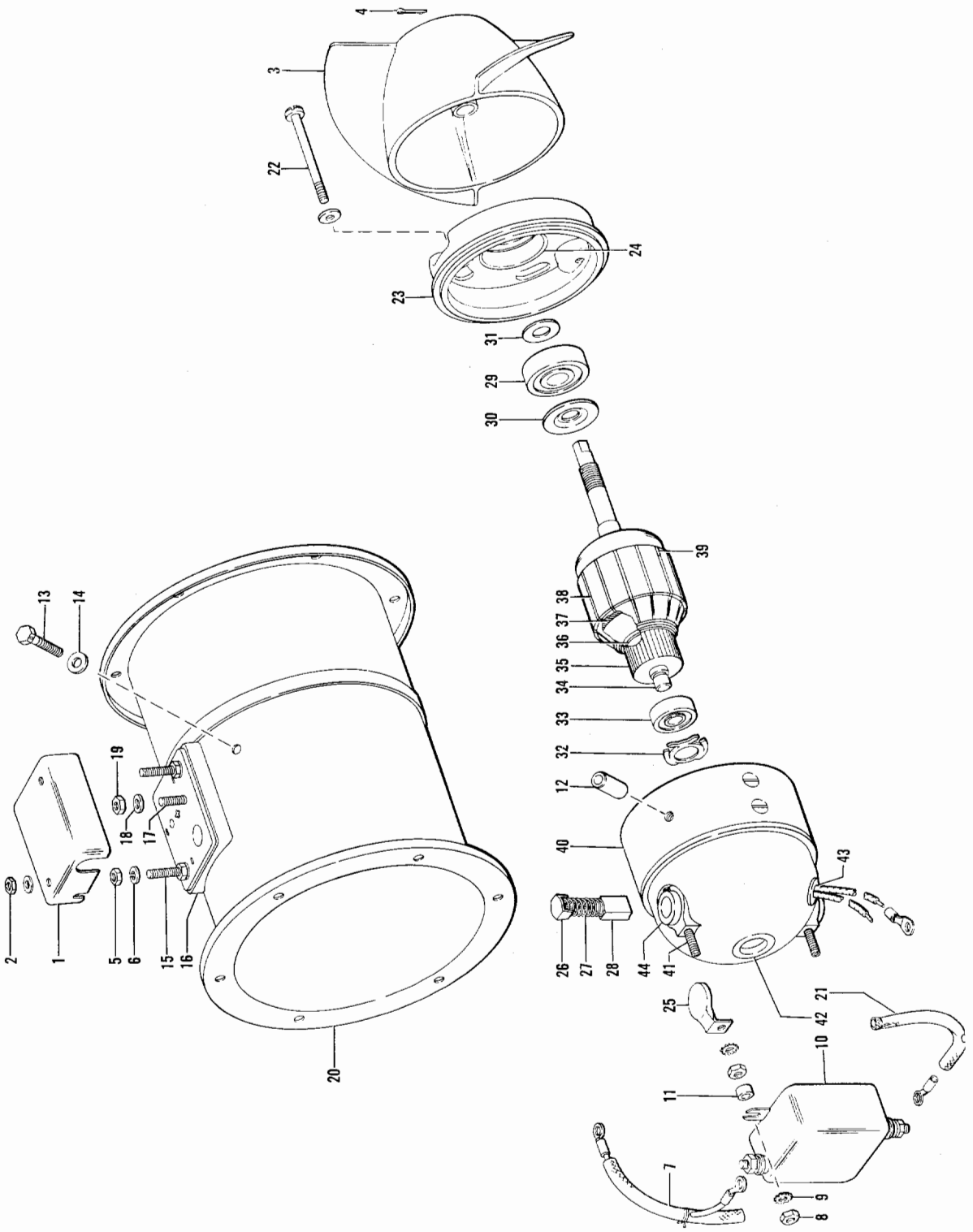

Figure 48B. Heater Blower

FIG. & INDEX NO.	PART NO.	DESCRIPTION 1 2 3 4 5 6 7	UNITS PER ASSY	USABLE ON CODE
48B-	M-4861H-1A	BLOWER ASSY,AIR /SEE FIG. 48 & 48A FOR NHA/	1	
- 1	5833B	. COVER,TERMINAL BOARD	1	
		/ATTACHING PARTS/		
- 2	MS20364-832C	. NUT	2	
	AN960-8L	. WASHER	2	
		----*----		
- 3	593D6	. PROPELLER,FIRST STAGE	1	
		/ATTACHING PARTS/		
- 4	MS24665-134	. PIN,COTTER	1	
		----*----		
- 5	AN340-8	. NUT	2	
- 6	AN935-8	. WASHER	2	
- 7	1580-2	. LEAD & SHIELD,ELECTRIC	1	
- 8	AN340-8	. NUT	2	
- 9	AN936-B8	. WASHER	2	
- 10	1591	. FILTER,RADIO INTERFERENCE	1	
	AN935-8	. WASHER /FURNISHED WITH FILTER/	2	
	AN960-8	. WASHER /FURNISHED WITH FILTER/	2	
	AN340-8	. NUT /FURNISHED WITH FILTER/	2	
- 11	1081-21	. SPACER,FIBER SLEEVE	2	
- 12	1081-14	. SPACER,ALUMINUM SLEEVE	3	
- 13	MS20074-03-10	. BOLT	3	
- 14	AN960-10	. WASHER	3	
	437-7	. TERMINAL BOARD ASSY	1	
		/ATTACHING PARTS/		
- 15	AN515-8-20	. SCREW	2	
	AN936-B8	. WASHER	4	
	AN935-8	. WASHER,LOCK	2	
	AN340-8	. NUT	4	
		----*----		
- 16	329B4	. . BOARD,TERMINAL	1	
- 17	K102B4-5	. . SCREW	1	
- 18	AN960-8	. . WASHER	1	
- 19	AN340-8	. . NUT	1	
- 20	A2781-172	. PLATE,HOUSING & IDENTIFICATION	1	
	1581-37	. . HOUSING,VANEAXIAL FAN	1	
	2068-265	. . PLATE,IDENTIFICATION	1	
- 21	1579	. SHIELD,ELECTRIC LEAD	1	
	M2916V	. MOTOR,DIRECT CURRENT	1	
	5801N4	. . ENDBELL ASSY,SHAFT	1	
		/ATTACHING PARTS/		
- 22	AN500-A10-32	. . SCREW	2	
	AN960-10L	. . WASHER	2	
	AN936-B8	. . WASHER	2	
	AN340-8	. . NUT	2	
		----*----		
- 23	5801N21	. . . ENDBELL,SHAFT	1	
- 24	2951-11	. . . INSERT,BEARING	1	
- 25	417H2	. . CAP,BRUSH	2	
- 26	299-6	. . BRUSH ASSY	2	
- 27	296-2	. . . SPRING	1	
- 28	297-6	. . . BRUSH	1	
- 29	K271-200SSL	. . BEARING,BALL	1	
- 30	536-2	. . SHIELD,BEARING	1	
- 31	461	. . SLINGER,FLAT	1	
- 32	K129-4	. . BEARING,BALL	1	
- 33	K271-38SSL	. . BEARING,BALL	1	
	313B38	. . ARMATURE ASSY,MOTOR	1	
- 34	306-12	. . . ARMATURE SUBASSY,MOTOR	1	
- 35	3517-2	. . . COMMUTATOR,ARMATURE	1	
- 36	462A	. . . WASHER,NONMETALLIC	1	
- 37	2940-2	. . . WASHER,NONMETALLIC	1	
- 38	2850-9	. . . WEDGE,ELECTRICAL WINDING WOOD	14	
- 39	493A1	. . . WEIGHT,BALANCE	AR	
	2240-14	. . STATOR & ENDBELL ASSY	1	
- 40	2238-14	. . . STATOR,MOTOR	1	
- 41	AN565D8H14	. . . SCREW,SET	2	
- 42	5803J13	. . . ENDBELL,COMMUTATOR	1	
- 43	K323-4-6	. . . GROMMET,ELASTIC	1	
- 44	447A39	. . . HOLDER & LEAD,BRUSH	1	

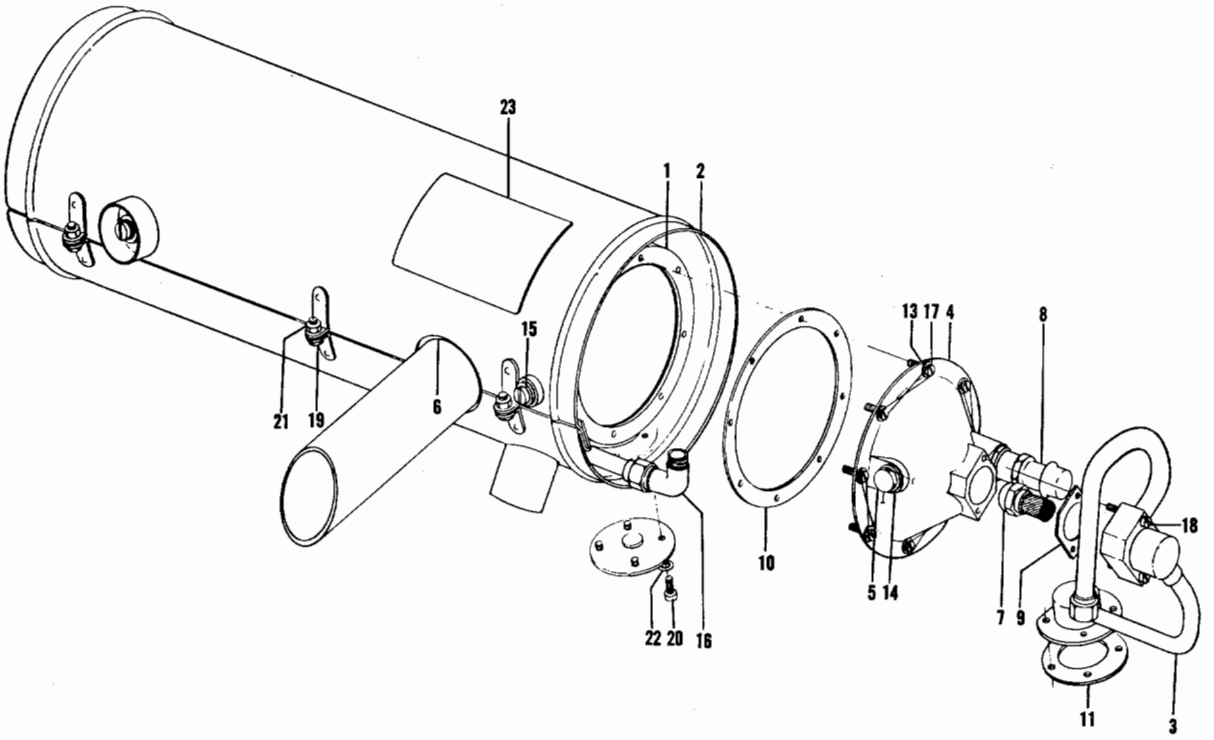

Figure 48C. Heater

FIG. & INDEX NO.	PART NO.	DESCRIPTION 1 2 3 4 5 6 7	UNITS PER ASSY	USABLE ON CODE
48C-	D-83A28	HEATER ASSY /SEE FIG. 48 & 48A FOR NHA/	1	
- 1	45C40	COMBUSTION CHAMBER & RADIATOR ASSY.	1	
- 2	C85A82	JACKET ASSY	1	
- 3	07C56	NOZZLE HOLDER & FEED ASSY,FUEL & AIR.	1	
- 4	51A45	HEAD,COMBUSTION	1	
- 5	51A05	ELECTRODE,GROUND.	1	
- 6	A-35A71	GASKET ASSY,ROPE.	1	
- 7	AA36A47	NOZZLE,SPRAY /1.75 G.P.H./.	1	
	G36A47	NOZZLE,SPRAY /2.00 G.P.H./.	1	
- 8	54A35	SPARK PLUG.	1	
- 9	51A-66	GASKET,NOZZLE HOLDER.	1	
- 10	52A-02	GASKET,COPPER ASBESTOS.	1	
- 11	87A37	GASKET,FUEL FITTING	2	
- 13	45A28	WASHER,COPPER	9	
- 14	56A14	WASHER.	1	
- 15	AN913-2S	PLUG.	2	
- 16	AN821-6	ELBOW	1	
- 17	AN500-A8-8	SCREW	9	
- 18	V-40A76	SCREW	2	
- 19	AN500-A8-10	SCREW	3	
- 20	AN501-A10-8	SCREW	4	
- 21	AN365-832C	NUT	3	
- 22	AN935-10	WASHER.	4	
	ED99A30	PLATE,RATING.	1	

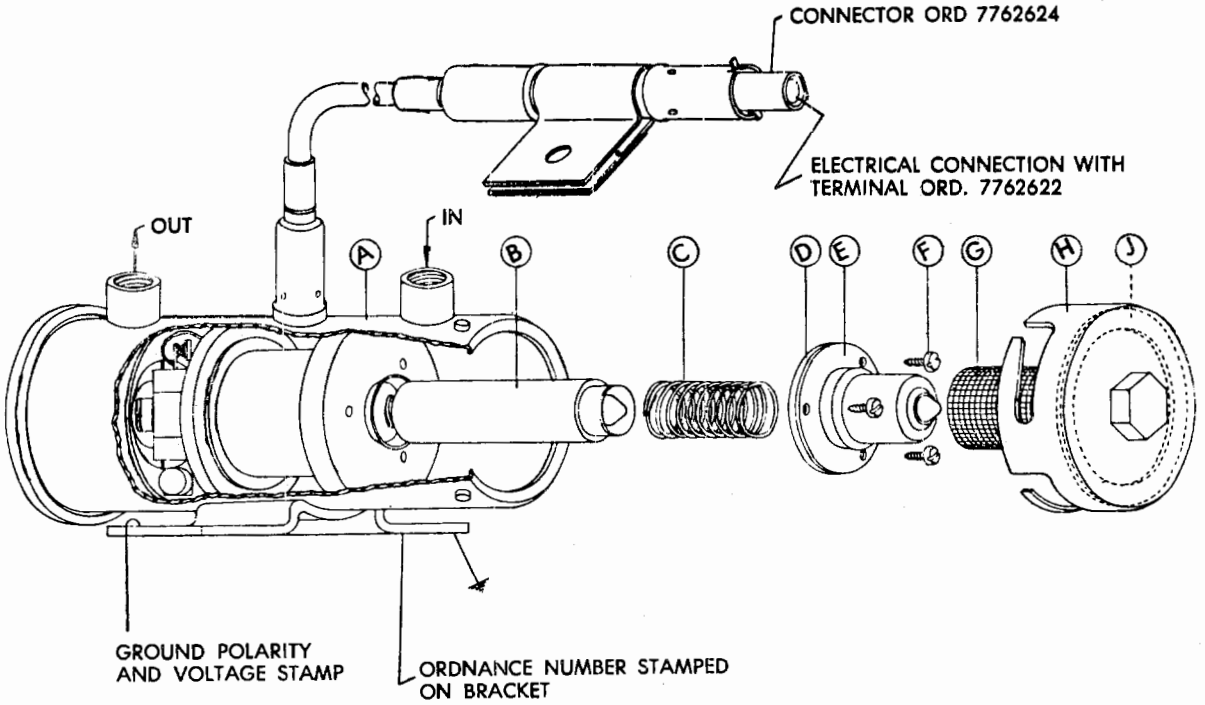

Figure 48D. Heater Fuel Pump & Anti-Icer Pump

FIG. & INDEX NO.	PART NO.	DESCRIPTION 1 2 3 4 5 6 7	UNITS PER ASSY	USABLE ON CODE
48D-	476439	PUMP ASSY /SEE FIG. 48 & 48A FOR NHA/	2	
- A		PUMP SUBASSY		
- B	476474	PLUNGER ASSY	1	
- C	476285	SPRING,PLUNGER	1	
- D	475126	GASKET,PLUNGER SPRING CUP	1	
- E	476364	CUP SUBASSY,PLUNGER SPRING	1	
- F	490028	SCREW	3	
- G	475634	SCREEN,FILTER	1	
- H	476563	COVER & GASKET ASSY	1	
- J	475594	GASKET,COVER	1	
	477987	ANODE	1	

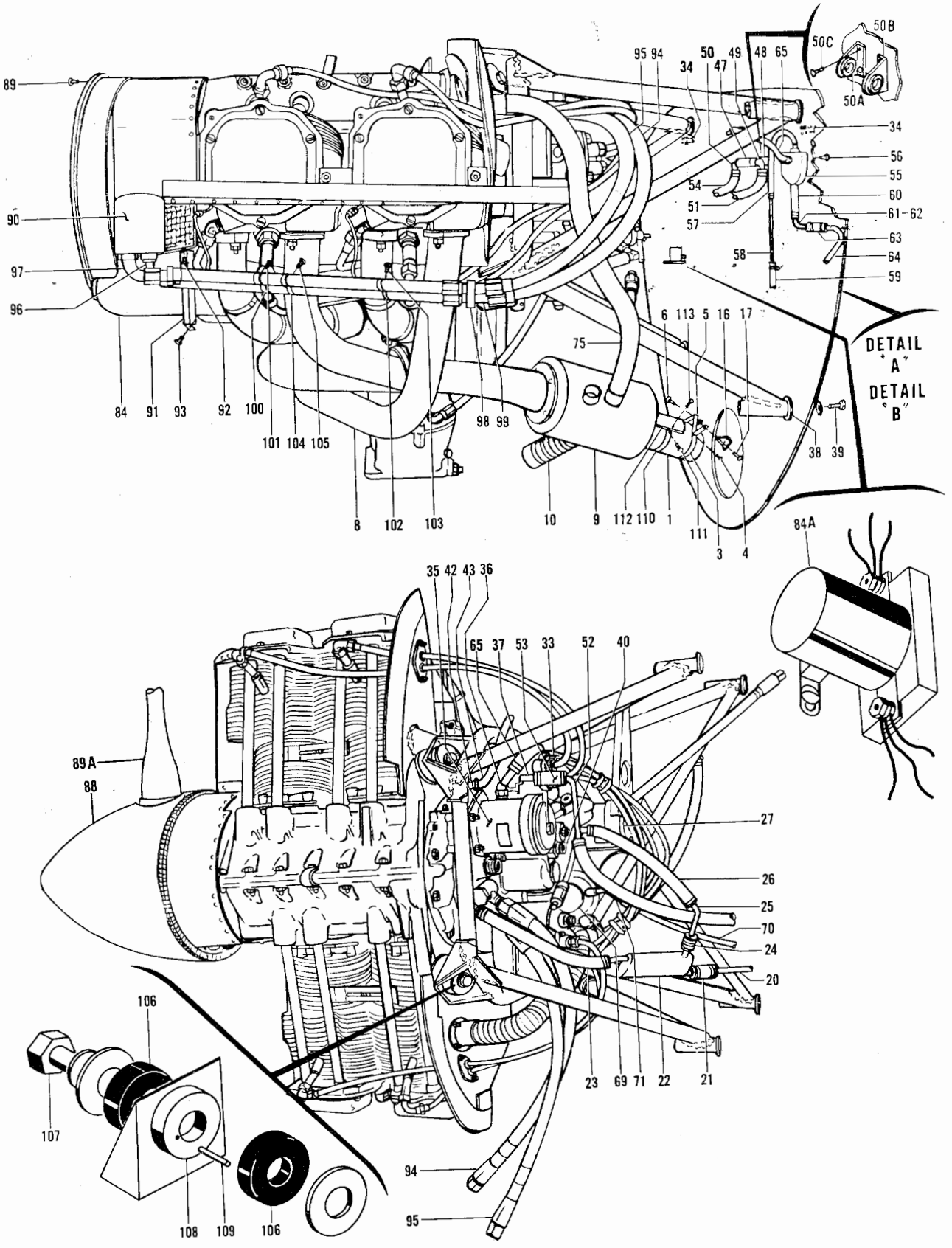

Figure 49. Power Plant (TD-1 thru TD-533) (Sht. 1 of 3 Shts.)

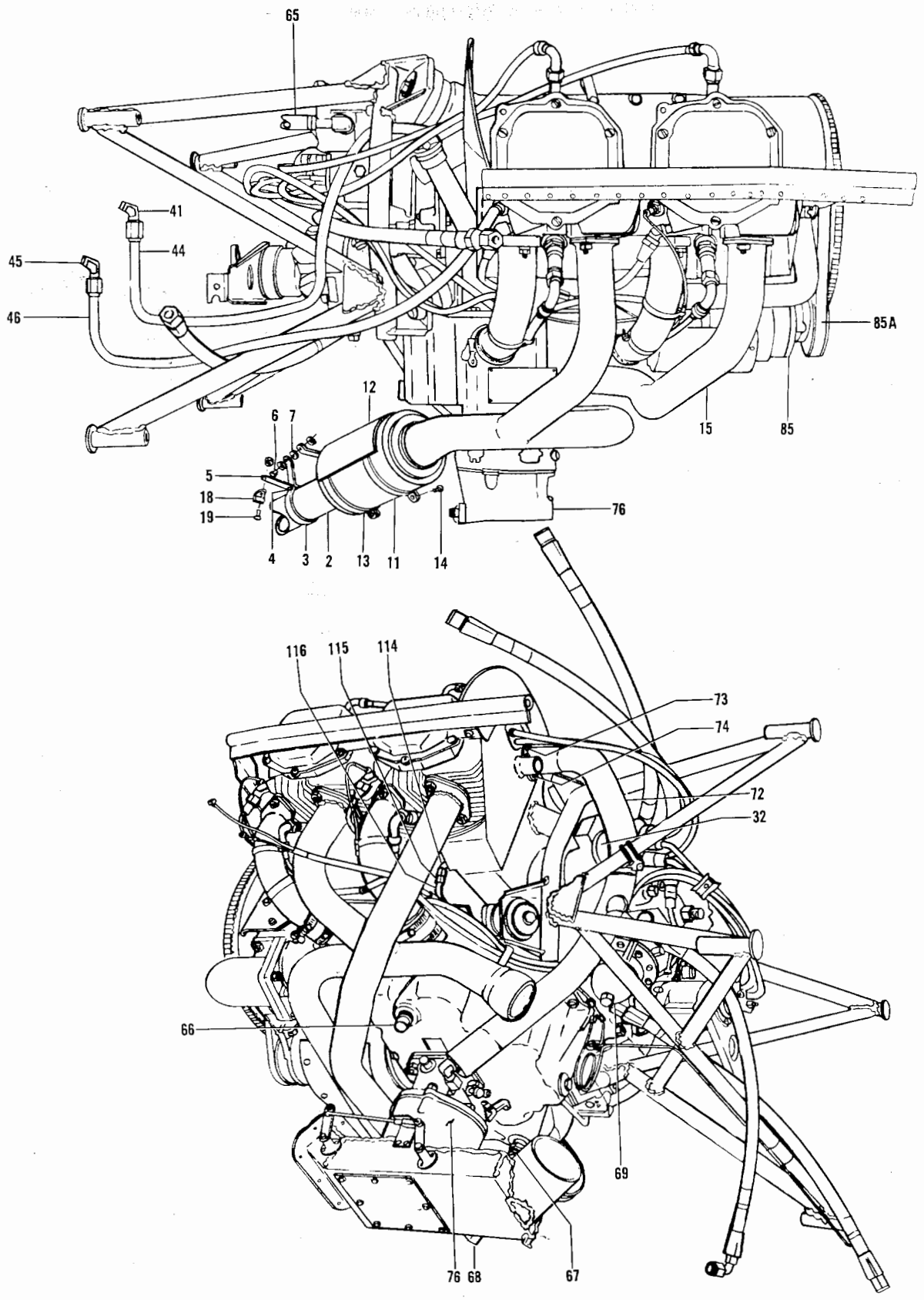

Figure 49. Power Plant (TD-1 thru TD-533) (Sht. 2 of 3 Shts.)

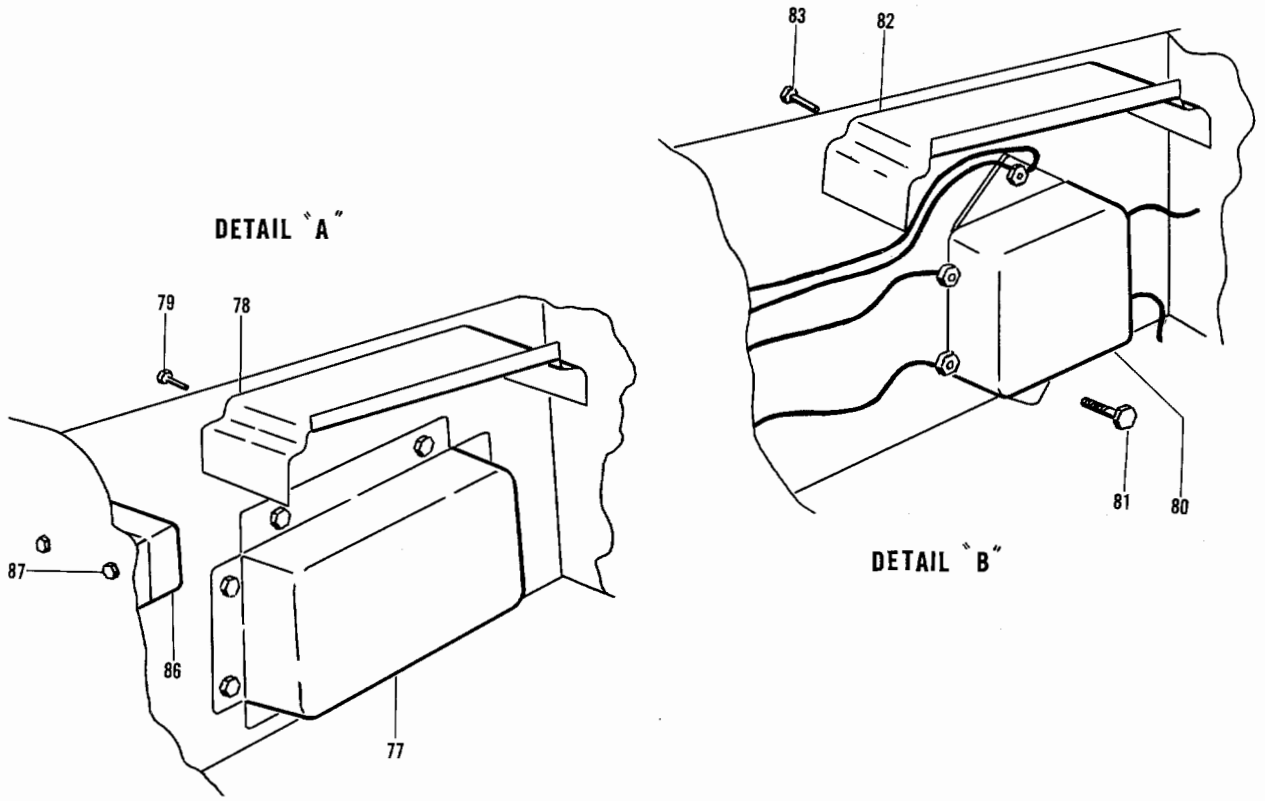

Figure 49. Power Plant (TD-1 Thru TD-533) (Sht. 3 of 3 Shts.)

FIG. & INDEX NO.	PART NO.	DESCRIPTION 1 2 3 4 5 6 7	UNITS PER ASSY	USABLE ON CODE
49	95-910001-77	POWER PLANT INSTL,LH.	NP	1
	95-910001-80	POWER PLANT INSTL,RH.	NP	1
	95-910001-197	POWER PLANT INSTL,LH /SEE FIG. 49A/	NP	2
	95-910001-200	POWER PLANT INSTL,RH /STANDARD/	NP	2
		/USED WITHOUT VACUUM PUMP/ /SEE FIG. 49A/		
	95-910001-198	POWER PLANT INSTL,RH /OPTIONAL/	NP	2
		/USED WITH VACUUM PUMP/ /SEE FIG. 49A/		
-	360A1A	. ENGINE.	2	1
- 1	¤95-910001-5	. TUBE,LH ENGINE OUTBD EXHAUST.	1	1
	¤95-910001-109	. TUBE,RH ENGINE INBD EXHAUST	1	1
- 2	¤95-910001-15	. TUBE,LH ENGINE INBD EXHAUST	1	1
	¤95-910001-139	. TUBE,RH ENGINE OUTBD EXHAUST.	1	3
- 3	¤35-950126	. CLAMP	2	1
		/ATTACHING PARTS/		
- 4	¤AN3-4/M/	. BOLT.	1	
	¤AN960-10	. WASHER.	1	
	¤AN310-3	. NUT	1	
	¤MS24665-132	. PIN,COTTER /SUPERSEDES AN380-2-2/	1	
		----*----		
- 5	¤35-910003-43	. LINK,ENGINE EXHAUST	2	3
		/ATTACHING PARTS/		
- 6	¤AN3-4/M/	. BOLT.	3	
- 7	¤95-910001-159	. BUSHING	3	4
	¤AN970-3	. WASHER.	6	4
	¤AN960-10	. WASHER.	3	
	¤AN310-3	. NUT	3	
	¤MS24665-132	. PIN,COTTER /SUPERSEDES AN380-2-2/	3	
		----*----		

FIG. & INDEX NO.	PART NO.	DESCRIPTION 1 2 3 4 5 6 7	UNITS PER ASSY	USABLE ON CODE
49 - 8	¤95-910001-35	. STACK ASSY,LH ENGINE EXHAUST.	1	3
	¤95-910001-59	. STACK ASSY,RH ENGINE EXHAUST.	1	3
- 9	¤538-2	. HEATER,LH ENGINE OUTBD.	1	1
- 10	¤111716-6XX10	. DUCT,LH	1	1
	¤105798-12	. CLAMP,HIGH PRESSURE HOSE.	2	1
	¤538-1	. HEATER,RH ENGINE OUTBD.	1	1
	¤50-910258	. DUCT,RH /SUPERSEDES 111716-6XX6/.	1	1
	¤105798-12	. CLAMP,HIGH PRESSURE HOSE.	1	1
- 11	¤189	. MUFFLER,INBD ENGINE	2	1
	95-910019-25	. SHROUD ASSY,LH ENGINE EXHAUST INBD.	1	1
	95-910019-27	. SHROUD ASSY,RH ENGINE EXHAUST INBD.	1	1
- 12	¤95-910019-1	. . SHROUD,LH ENGINE.	1	1
	¤95-910019-9	. . SHROUD,RH ENGINE.	1	1
	95-910019-23	. . STRAP,SHROUD.	2	1
- 13	¤95-910019-15	. . CLAMP ASSY,LH ENGINE.	2	1
	¤95-910019-3	. . CLAMP ASSY,RH ENGINE.	2	1
		/ATTACHING PARTS/		
- 14	AN3	. . BOLT.	2	
	AN520-10R	. . BOLT.	4	
	¤AN960-10L	. . WASHER.	4	
	¤AN970-3	. . WASHER.	4	
	¤MS20364-1032	. . NUT /SUPERSEDES AN364-1032/	2	
	¤MS20365-1032	. . NUT /SUPERSEDES AN363-1032/	4	
		----*----		
	¤95-910001-169	. STACK ASSY,LH ENGINE EXHAUST.	1	3
	¤95-910001-165	. . TUBE,LH ENGINE EXHAUST.	NP	3
	¤95-910001-171	. STACK ASSY,RH ENGINE EXHAUST.	1	3
	¤95-910001-167	. . TUBE,RH ENGINE EXHAUST.	NP	3
- 16	¤95-910001-155	. BRACKET,LH EXHAUST STACK SUPPORT.	1	7
	¤95-910001-156	. BRACKET,RH EXHAUST STACK SUPPORT.	1	7
		/ATTACHING PARTS/		
- 17	¤NAS220-8	. SCREW	3	
	¤AN960-8	. WASHER.	3	
	¤MS20364-832	. NUT	3	
		----*----		
- 18	¤95-910001-157	. BRACKET,LH EXHAUST STACK SUPPORT.	2	7
	¤95-910001-158	. BRACKET,RH EXHAUST STACK SUPPORT.	2	7
		/ATTACHING PARTS/		
- 19	¤NAS220-8	. SCREW	2	
	¤AN960-8	. WASHER.	2	
	¤MS20364-832	. NUT	2	
		----*----		
- 20	¤95-910001-187	. TUBE ASSY,LH ENGINE CRANKCASE BREATHER. . . .	1	1
	AN742	. CLAMP,SUPPORT	1	1
	¤95-910001-189	. TUBE ASSY,RH ENGINE CRANKCASE BREATHER. . . .	1	1
	AN742	. CLAMP,SUPPORT	1	1
	¤AN931-12-20	. GROMMET,ELASTIC	1	1
- 21	106200FR12-17	. HOSE,ENGINE BREATHER OIL SEPARATOR.	1	9
		/ORDER 3/4 ID MIL7938 X 4 1/4 IN./		
	¤AN737RM38	. CLAMP,HOSE.	2	9
- 22	¤35-939180-1	. SEPARATOR ASSY,ENGINE BREATHER OIL.	1	9
	106200H12-32	. HOSE,OIL SEPARATOR.	1	8
		/ORDER 3/4 ID MIL6000 X 8 IN./		
- 23	106200FR12-32	. HOSE,LH ENGINE BREATHER OIL SEPARATOR	1	9
		/ORDER 3/4 ID MIL7938 X 8 IN./		
	106200FR12-64	. HOSE,RH ENGINE BREATHER OIL SEPARATOR	1	9
		/ORDER 3/4 ID MIL7938 X 16 IN./		
	¤AN737RM46	. CLAMP,HOSE.	1	8
	¤AN737RM38	. CLAMP,HOSE.	2	9
- 24	106200FR4-11	. HOSE,OIL SEPARATOR.	1	9
		/ORDER 1/4 ID MIL7938 X 2 3/4 IN./		
	¤AN737RM22	. CLAMP,HOSE.	2	9

FIG. & INDEX NO.	PART NO.	DESCRIPTION 1 2 3 4 5 6 7	UNITS PER ASSY	USABLE ON CODE
49 - 25	¤95-910001-177	. TUBE,LH ENGINE BREATHER OIL SEPARATOR	1	9
	95-910001-179	. TUBE,RH ENGINE BREATHER OIL SEPARATOR	1	9
- 26	106200FR4-58	. HOSE,LH ENGINE BREATHER OIL SEPARATOR . . . . /ORDER 1/4 ID MIL7938 X 14 1/2 IN./	1	9
	106200FR4-36	. HOSE,RH ENGINE BREATHER OIL SEPARATOR . . . . /ORDER 1/4 ID MIL7938 X 9 IN./	1	9
	¤AN737RM22	. CLAMP,HOSE.	1	9
- 27	¤210360	. GOVERNOR ASSY,PROPELLER . . . . . /SUPERSEDES 210195 & 210300/	2	3
		INDEXES 28 THRU 31 ARE DELETED.		
- 32	¤S4LN21	. MAGNETO,LH /10-51360-30/.	2	1
- 33	¤S4LN20	. MAGNETO,RH /10-51360-29/.	2	1
	¤11-8150-1	. TIMING KIT,MAGNETO /S200 SERIES MAGNETOS/ . . /SUPERSEDES 11-8150/	1	1
- 34	¤95-910020	. PLACARD,MAGNETO DISCONNECT INSTRUCTIONS . . .	4	3
- 35	¤G455PM	. PUMP,VACUUM /SUPERSEDES G450L,G455L,. . . . . G455 & 3P194F/ /SEE FIG. 49F/	2	1
- 36	¤AN844-8	. ELBOW	2	1
- 37	¤AN842-8	. ELBOW	2	1
- 38	¤95-910005	. MOUNTING ASSY,ENGINE. . . . . /ATTACHING PARTS/	2	3
- 39	¤AN6-35A/M/	. BOLT.	4	
	¤MS20365-624	. NUT /SUPERSEDES AN365-624/.	4	
	¤AN960-616	. WASHER.	4	
		----*----		
- 40	¤MS28034-1	. BULB,OIL TEMPERATURE.	2	3
	¤AN837-4	. ELBOW,OIL PRESSURE LH	1	3
	¤AN833-4	. ELBOW,OIL PRESSURE RH	1	3
	¤AN924-4	. NUT,OIL PRESSURE.	2	3
- 41	¤189717	. RESTRICTOR,OIL PRESSURE	2	3
- 42	¤AN914-1	. ELBOW	1	3
- 43	¤MS28741-4-0194	. HOSE ASSY,OIL PRESSURE LH	1	12
	¤MS28741-4-0184	. HOSE ASSY,OIL PRESSURE LH	1	13
	¤MS28741-4-0150	. HOSE ASSY,OIL PRESSURE RH	1	12
	¤MS28741-4-0140	. HOSE ASSY,OIL PRESSURE RH	1	13
- 44	¤MS28741-4-0102	. HOSE ASSY,OIL PRESSURE.	2	3
- 45	¤45-939120	. RESTRICTOR,MANIFOLD PRESSURE.	2	3
- 46	¤MS28741-4-0190	. HOSE ASSY,MANIFOLD PRESSURE LH.	1	3
	¤MS28741-4-0200	. HOSE ASSY,MANIFOLD PRESSURE RH.	1	3
- 47	¤32-436	. VALVE,VACUUM RELIEF /SEE FIG. 49G/.	2	1
	¤9520	. VALVE,VACUUM RELIEF /ALTERNATE FOR 32-436/. .	2	1
- 48	AN913-1S	. PLUG,PIPE	2	1
- 49	¤AN844-8D	. ELBOW,LH ENGINE	1	1
	¤AN840-8D	. ELBOW,RH ENGINE	1	1
- 50	¤AN822-8D	. ELBOW	1	1
- 50A	¤MS35489-17	. GROMMET,VACUUM RELIEF VALVE BRACKET . . . . . /SUPERSEDES AN931-10-14/	2	1
- 50B	95-910001-195	. BRACKET,VACUUM RELIEF VALVE MOUNTING. . . . . /ATTACHING PARTS/	4	1
- 50C	AN515-832	. SCREW	2	
		----*----		
	106200FR8-80	. HOSE,LH ENGINE VACUUM RELIEF VALVE. . . . . /ORDER 1/2 ID MIL7938 X 20 IN./	1	8
- 51	106200FR8-60	. HOSE,LH ENGINE VACUUM RELIEF VALVE. . . . . /ORDER 1/2 ID MIL7938 X 15 IN./	1	9
	106200FR8-60	. HOSE,RH ENGINE VACUUM RELIEF VALVE. . . . . /ORDER 1/2 ID MIL7938 X 15 IN./	1	8
	106200FR8-45	. HOSE,RH ENGINE VACUUM RELIEF VALVE. . . . . /ORDER 1/2 ID MIL7938 X 11 1/4 IN./	1	9
- 52	¤35-939178-7	. DRAIN ASSY,LH ENGINE OIL SEPARATOR.	1	9
	¤35-939178-1	. DRAIN ASSY,RH ENGINE OIL SEPARATOR.	1	9
- 53	106200FR8-14	. HOSE,ENGINE OIL SEPARATOR DRAIN . . . . . /ORDER 1/2 ID MIL7938 X 3 1/2 IN./	1	9
	¤AN737RM30	. CLAMP,HOSE.	2	9

FIG. & INDEX NO.	PART NO.	DESCRIPTION 1 2 3 4 5 6 7	UNITS PER ASSY	USABLE ON CODE
49 - 54	95-910001-153	. TUBE ASSY,LH ENGINE VACUUM VALVE.	1	1
	95-910001-154	. TUBE ASSY,RH ENGINE VACUUM VALVE.	1	1
- 55	¤G4025	. SEPARATOR,OIL	2	14
	G4026	. SEPARATOR,OIL	2	15
		/ATTACHING PARTS/		
- 56	AN520-10-8	. SCREW	2	
	¤MS20365-1032	. NUT /SUPERSEDES AN365-1032/	2	
	¤AN960-10	. WASHER.	2	
		----*----		
- 57	106200FR8-15	. HOSE /ORDER 1/2 ID MIL7938 X 3 3/4 IN./ . . .	2	1
	¤AN737RM30	. CLAMP	2	1
	¤95-910001-45	. TUBE,LH ENGINE OIL SEPARATOR BREATHER	1	8
- 58	95-910001-173	. TUBE,LH ENGINE OIL SEPARATOR BREATHER	1	9
	95-910001-103	. TUBE,RH ENGINE OIL SEPARATOR BREATHER	1	8
	95-910001-175	. TUBE,RH ENGINE OIL SEPARATOR BREATHER	1	9
- 59	106200FR8-14	. HOSE,OIL SEPARATOR BREATHER	2	9
		/ORDER 1/2 ID MIL7938 X 3 1/2 IN./		
	¤AN737RM30	. CLAMP,HOSE.	4	9
- 60	106200FR4-8	. HOSE /ORDER 1/4 ID MIL7938 X 2 IN./	2	14
	¤AN737RM22	. CLAMP	4	14
- 61	¤95-910001-41	. TUBE,OIL SEPARATOR.	2	14
- 62	¤AN842-4D	. ELBOW,OIL SEPARATOR	5	15
- 63	106200FR4-58	. HOSE /ORDER 1/4 ID MIL7938 X 14 1/2 IN./. . .	2	1
	¤AN737RM22	. CLAMP	2	1
- 64	95-910001-69	. TUBE ASSY	2	1
- 65	106200FR8-50	. HOSE /ORDER 1/2 ID MIL7938 X 12 1/2 IN./. . .	2	1
	¤AN737RM30	. CLAMP	4	1
- 66	NO NUMBER	. PLUG,OIL DRAIN /FURNISHED WITH ENGINE/. . . .	2	3
- 67	¤BJ1000AH4T	. VALVE,OIL DRAIN	2	3
- 68	95-910001-163	. TUBE,OIL DRAIN.	2	3
- 69	¤75148	. PUMP,FUEL /TYPE AH/ /FURNISHED WITH ENGINE/ .	2	1
		/SUPERSEDES 62628 & 74082/		
- 70	¤95-910001-67	. TUBE,FUEL PUMP OVERFLOW	2	1
- 71	95-910001-99	. HOSE,FUEL PUMP OVERFLOW	2	1
- 72	¤115167CXZ060585	. DUCT,FRESH AIR FUEL PUMP.	2	16
	¤115167CXZ061005	. DUCT,FRESH AIR FUEL PUMP.	2	17
		/ATTACHING PARTS/		
- 73	¤AN515-8R7	. SCREW	3	
- 74	¤AN525-832R7	. SCREW	1	
	¤AN960-8	. WASHER.	4	
	¤35-910004-7	. WASHER.	1	
	¤MS20365-832	. NUT /SUPERSEDES AN365-832/.	4	
		----*----		
	¤111716AX2XX18	. DUCT,PUMP TO CARBURETOR FUEL LINE	2	17
- 75	¤111716-2XX42	. DUCT,BLAST TUBE LH.	1	18
	¤111716-2XX38	. DUCT,BLAST TUBE LH.	1	19
	¤111716-2XX30	. DUCT,BLAST TUBE RH.	1	18
	¤AN737TW38	. CLAMP,BLAST TUBE DUCT	4	1
- 76	¤MA4-5	. CARBURETOR.	2	1
	95-919100	. SYSTEM INSTL,AIR INDUCTION /SEE FIG. 53/. . .	NP	1
- 77	1119144	. REGULATOR,15 AMP VOLTAGE /STANDARD/	2	5
		/SEE FIG. 49H/		
	¤1118976	. REGULATOR,25 AMP VOLTAGE /OPTIONAL/	2	6
		/SEE FIG. 49H/		
	¤1119237C	. REGULATOR,40 AMP VOLTAGE /OPTIONAL/	2	6
- 78	95-369012	. SHIELD,VOLTAGE REGULATOR.	2	3
		/ATTACHING PARTS/		
- 79	AN520-6	. SCREW	3	
	¤AN960-6	. WASHER.	3	
		----*----		
- 80	¤1116902	. RELAY,PARALLELING /RH ENGINE ONLY/.	1	3
		/SUPERSEDES 71349/		
		/ATTACHING PARTS/		
- 81	AN4	. BOLT.	2	
		----*----		

FIG. & INDEX NO.	PART NO.	DESCRIPTION 1 2 3 4 5 6 7	UNITS PER ASSY	USABLE ON CODE
49 - 82	95-369012	. SHEILD,RH PARALLELING RELAY . . . . . /ATTACHING PARTS/	1	3
- 83	AN520-6	. SCREW	3	
	¤AN960-6	. WASHER.	3	
		----*----		
- 84	¤1109687	. STARTER,/SUPERSEDES 72337/ /SEE FIG. 49I/ . .	2	3
- 84A	¤6041H190	. SOLENOID,STARTER /SUPERSEDES 61941 & G34810A/ /ATTACHING PARTS/	2	
	¤NAS222-9	. SCREW	2	
	¤NAS222-19	. SCREW	2	
	NAS43DD4-40	. SPACER.	2	
	AN935-416L	. WASHER.	2	
	AN360-4	. NUT	2	
		----*----		
- 85	1101901	. GENERATOR,15 AMP /STANDARD/ . . . . . /SEE FIG. 49J/	2	5
	1101905	. GENERATOR,25 AMP /OPTIONAL/ . . . . . /SEE FIG. 49J/	2	6
	¤1105052	. GENERATOR,40 AMP /OPTIONAL/ . . . . . /SEE FIG. 49J/	2	6
- 85A	¤71579	. BELT,GENERATOR /USE WITH 40 AMP GENERATOR/. .	2	3
	¤72000	. BELT,GENERATOR /USE WITH 25 AMP GENERATOR/. .	2	3
	¤72871	. BELT,GENERATOR /USE WITH 25 AMP GENERATOR . . WITH ANTI-ICER SLINGER RING/	2	3
	4190	. BLOCK,CIRCUIT LIMITER MOUNTING.	2	5
- 86	AC/-20	. LIMITER,CIRCUIT . . . . . /USED WITH STANDARD GENERATOR INSTL/	2	5
	¤AC/-30	. LIMITER,CIRCUIT . . . . . /USED WITH OPTIONAL GENERATOR INSTL/ /ATTACHING PARTS/	2	5
- 87	AN507-10	. SCREW	2	
	¤AN960-10L	. WASHER.	2	
	¤MS20364-1032	. NUT /SUPERSEDES AN364-1032/	2	
		----*----		
- 88	¤835-6P	. SPINNER ASSY,POLISHED /SUPERSEDES 835-6/. . .	2	3
	835-16	. SPINNER ASSY,UNPOLISHED . . . . . /ATTACHING PARTS/	2	3
- 89	AN525-10R	. SCREW	14	
		----*----		
- 89A	¤HC92WK2B/ W8447-12A	. PROPELLER ASSY /SEE FIG. 49K/ . . . . . /SUPERSEDES HC92ZK2B/8447-12A/	2	3
	95-960006-603	. PROPELLER ASSY /WITH ANTI-ICER SHOES/	2	3
	95-910015	. BAFFLE INSTL /SEE FIG. 50/.	NP	3
- 90	¤8523517	. COOLER,OIL.	2	20
	¤8526250	. COOLER,OIL.	2	21
- 91	¤95-910001-191	. ANGLE,OIL COOLER. . . . . /ATTACHING PARTS/	2	
- 92	AN520-8R	. SCREW	1	
- 93	AN507-8R	. SCREW	1	
	¤AN960-8	. WASHER.	1	
	¤MS20365-832	. NUT /SUPERSEDES AN365-832/.	1	
		----*----		
- 94	¤MS28741-8-0200	. HOSE ASSY,REAR OIL COOLER INLET	2	12
	MS28741-8-0184	. HOSE ASSY,REAR OIL COOLER INLET	2	13
	95-803S	. KIT,FLEXIBLE OIL COOLER LINE. . . . . /SUPERSEDES 95-910001-145/	2	22
	¤601000-8D24	. HOSE ASSY,FWD OIL COOLER INLET.	2	23
- 95	¤MS28741-8-0220	. HOSE ASSY,REAR OIL COOLER RETURN.	2	12
	MS28741-8-0244	. HOSE ASSY,REAR OIL COOLER RETURN.	2	13
	95-803S	. KIT,FLEXIBLE OIL COOLER LINE. . . . . /SUPERSEDES 95-910001-143/	2	22
	¤601000-8D18-5/8	. HOSE ASSY,FWD OIL COOLER RETURN	2	23
- 96	¤AN822-8	. ELBOW,FWD OIL COOLER INLET.	2	3
- 97	95-910001-107	. ELBOW,FWD OIL COOLER RETURN	2	3
- 98	95-910001-141	. BRACKET,OIL COOLER HOSE	2	3

FIG. & INDEX NO.	PART NO.	DESCRIPTION 1 2 3 4 5 6 7	UNITS PER ASSY	USABLE ON CODE
49 - 99	¤AN833-8D	. ELBOW	4	3
	¤AN924-8D	. NUT	4	3
	AN960B1216	. WASHER.	4	3
-100	¤AN742D8	. CLAMP,OIL COOLER HOSE	4	3
		/ATTACHING PARTS/		
-101	AN507-832	. SCREW	1	
	NAS43DD3-22	. SPACER.	1	
	¤AN960D8	. WASHER.	1	
	¤MS20365-832	. NUT /SUPERSEDES AN365-832/.	1	
		----*----		
-102	¤MS21919DG10	. CLAMP,OIL COOLER HOSE	2	3
		/ATTACHING PARTS/		
-103	AN507-832	. SCREW	1	
	NAS43DD3-22	. SPACER.	1	
	¤AN960-8	. WASHER.	1	
	¤MS20365-832	. NUT /SUPERSEDES AN365-832/.	1	
		----*----		
-104	¤MS21919DG10	. CLAMP,OIL COOLER HOSE	2	3
		/ATTACHING PARTS/		
-105	AN507-832	. SCREW	1	
	NAS43DD3-16	. SPACER.	1	
	¤AN960-8	. WASHER.	1	
	¤MS20365-832	. NUT /SUPERSEDES AN365-832/.	1	
		----*----		
-106	¤J7402-1	. MOUNT ASSY.	8	3
		/ATTACHING PARTS/		
-107	¤AN7-34A/M/	. BOLT.	1	
	¤MS20365-720/M/	. NUT /SUPERSEDES AN365-720/.	1	
	¤AN960-716	. WASHER.	1	
		----*----		
	95-910001-95	. SPACER ASSY	NP	3
-108	¤95-910001-25	. . SPACER.	1	3
-109	¤79-028-125-1250	. PIN,ROLL.	8	3
-110	¤95-910017-1	. CLAMP /SUPERSEDES 95-910017/.	4	3
		/ATTACHING PARTS/		
-111	AN3	. BOLT.	4	
	¤AN310-3	. NUT	4	
	¤AN960-10	. WASHER.	4	
		----*----		
-112	¤95-910018-3	. SHROUD,LH ENGINE EXHAUST OUTBD.	1	3
		/SUPERSEDES 95-910018/		
	¤95-910018-1	. SHROUD,RH ENGINE EXHAUST OUTBD.	1	3
		/ATTACHING PARTS/		
-113	AN520-10R	. SCREW	4	
	¤AN960-10	. WASHER.	4	
	¤AN970-3	. WASHER.	4	
	¤MS20365-1032	. NUT /SUPERSEDES AN363-1032/	4	
		----*----		
	¤35-410247	. BRACKET,STANDOFF WIRE	1	24
	¤95-910001-161	. BRACKET,STANDOFF WIRE	1	24
-114	¤AN5541-1	. THERMOCOUPLE,ENGINE CYLINDER BAYONET TYPE	1	3
-115	¤AN4076-1	. FITTING,THERMOCOUPLE.	1	3

FIG. & INDEX NO.	PART NO.	DESCRIPTION 1 2 3 4 5 6 7	UNITS PER ASSY	USABLE ON CODE
49 -116	¤TE108-15	. LEAD ASSY,CALIBRATED 8 OHM.	1	3
	¤SR88	. SPARK PLUG /AC/	8	3
	¤REM40E	. SPARK PLUG /CHAMPION/	8	3

CODE	EFFECTIVITY	CODE	EFFECTIVITY
1	TD-1 THRU TD-452	2	TD-453 THRU TD-533
3	TD-1 THRU TD-533	4	TD-148 THRU TD-452
5	TD-1 THRU TD-202	6	TD-203 THRU TD-533
7	TD-148 THRU TD-533	8	TD-1 THRU TD-192
9	TD-193 THRU TD-452	10	DELETED
11	DELETED	12	TD-1 THRU TD-48
13	TD-490 THRU TD-533	14	TD-1 THRU TD-243
15	TD-244 THRU TD-452	16	TD-186 THRU TD-300
17	TD-301 THRU TD-452	18	TD-1 THRU TD-185
19	TD-186 THRU TD-452	20	TD-1 THRU TD-306
21	TD-307 THRU TD-533	22	TD-1 THRU TD-155 EXCEPT TD-48, TD-88, TD-118, TD-131, TD-134, TD-138, TD-143, TD-144, TD-149, TD-152 AND TD-153
23	TD-48, TD-88, TD-118, TD-131, TD-134, TD-138, TD-143, TD-144, TD-149, TD-152, TD-153, TD-156 THRU TD-452	24	TD-120 THRU TD-533

B1

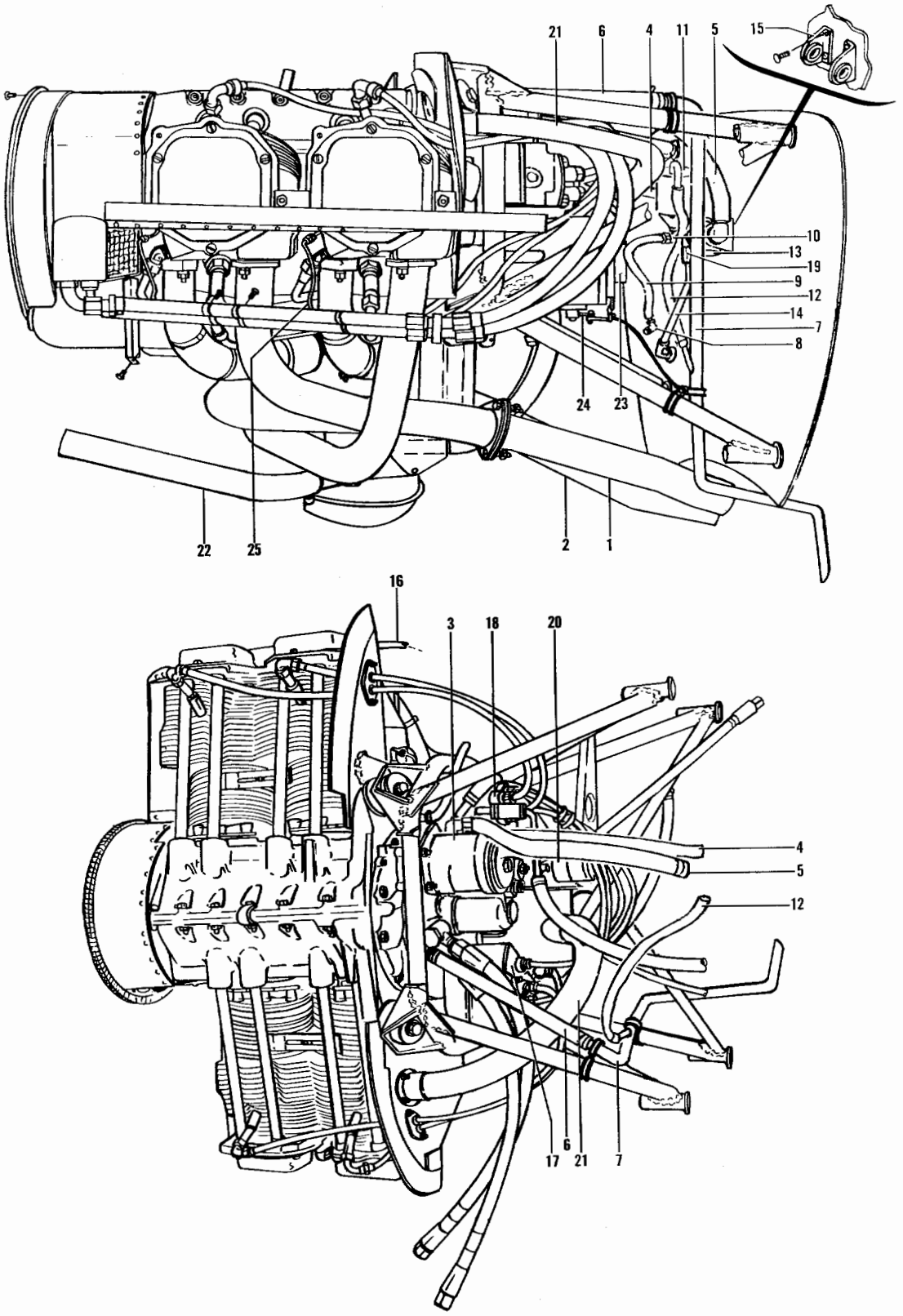

Figure 49A. Power Plant Differences (TD-453 thru TD-533)

FIG. & INDEX NO.	PART NO.	DESCRIPTION 1 2 3 4 5 6 7	UNITS PER ASSY	USABLE ON CODE
49A-	95-910001-197	POWER PLANT INSTL,LH /SEE FIG. 49 FOR NHA/. . .	NP	1
	95-910001-200	POWER PLANT INSTL,RH /STANDARD/ . . . . . /USED WITHOUT VACUUM PUMP/	NP	1
	95-910001-198	POWER PLANT INSTL,RH /OPTIONAL/ . . . . . /USED WITH VACUUM PUMP/	NP	1
	IO-360B1A	. ENGINE,FUEL INJECTION	1	1
	¤95-910001-209	. STACK,LH ENGINE OUTBD EXHAUST	1	1
	¤95-910001-211	. STACK,RH ENGINE INBD EXHAUST.	1	1
	¤95-910001-213	. STACK,LH ENGINE INBD EXHAUST.	1	1
	¤95-910001-215	. STACK,RH ENGINE OUTBD EXHAUST	1	1
- 1	¤95-910001-201	. . TUBE,LH ENGINE OUTBD EXHAUST.	1	1
	¤95-910001-203	. . TUBE,RH ENGINE INBD EXHAUST	1	1
- 2	¤95-910001-205	. . TUBE,LH ENGINE INBD EXHAUST	1	1
	¤95-910001-207	. . TUBE,RH ENGINE OUTBD EXHAUST.	1	1
- 3	¤G455PM	. PUMP,VACUUM /SUPERSEDES G455/ . . . . . /SEE FIG. 49F/	1	1
- 4	106200FR8-35	. HOSE,LH /ORDER 1/2 ID MIL7938 X 8 3/4 IN./. .	1	1
	106200FR8-36	. HOSE,RH /ORDER 1/2 ID MIL7938 X 9 IN./. . . .	1	1
	¤AN737RM30	. CLAMP	2	1
- 5	106200FR8-72	. HOSE,LH /ORDER 1/2 ID MIL7938 X 18 IN./ . . .	1	2
	106200FR8-69	. HOSE,LH /ORDER 1/2 ID MIL7938 X 17 1/4 IN./ .	1	3
	106200FR8-60	. HOSE,RH /ORDER 1/2 ID MIL7938 X 15 IN./ . . .	1	1
	¤AN737RM30	. CLAMP	2	1
- 6	106200FR12-24	. HOSE,LH /ORDER 3/4 ID MIL7938 X 6 IN./. . . .	1	1
	106200FR12-56	. HOSE,RH /ORDER 3/4 ID MIL7938 X 14 IN./ . . .	1	1
	¤AN737RM38	. CLAMP	2	1
- 7	¤95-910001-233	. TUBE ASSY,LH.	1	1
	¤95-910001-235	. TUBE ASSY,RH.	1	1
- 8	95-910001-69	. TUBE ASSY	1	1
- 9	106200FR4-55	. HOSE,LH /ORDER 1/4 ID MIL7938 X 13 3/4 IN./ .	1	2
	106200FR8-54	. HOSE,LH /ORDER 1/2 ID MIL7938 X 13 1/2 IN./ .	1	3
	106200FR4-52	. HOSE,RH /ORDER 1/4 ID MIL7938 X 13 IN./ . . .	1	1
	¤AN737RM30	. CLAMP	2	1
- 10	¤AN842-4D	. ELBOW	1	1
- 11	¤95-380009	. SEPARATOR,OIL . . . . . /ATTACHING PARTS/	1	1
	NAS221-6	. SCREW	2	
	¤NAS697A3	. NUTPLATE.	2	
		----*----		
- 12	106200FR8-70	. HOSE,LH /ORDER 1/2 ID MIL7938 X 17 1/2 IN./ .	1	1
	106200FR8-56	. HOSE,RH /ORDER 1/2 ID MIL7938 X 14 IN./ . . .	1	1
	¤AN737RM30	. CLAMP	2	1
- 13	9520	. VALVE,RELIEF.	1	1
- 14	95-910001-153	. TUBE ASSY,LH.	1	1
	95-910001-154	. TUBE ASSY,RH.	1	1
- 15	95-910001-195	. BRACKET . . . . . /ATTACHING PARTS/	2	1
	AN515-832	. SCREW	2	
		----*----		
- 16	¤MS28741-4-0190	. HOSE ASSY,MANIFOLD PRESSURE LH /SUPERSEDES. . 95-910001-241 & MS28741-4-0252/	1	1
	¤MS28741-4-0200	. HOSE ASSY,MANIFOLD PRESSURE RH /SUPERSEDES. . 95-910001-241 & MS28741-4-0202/	1	1
- 17	¤S4LN200	. MAGNETO,LH /10-163005-2/.	1	1
- 18	¤S4LN204	. MAGNETO,RH /10-163045-3/.	1	1
	¤11-8150-1	. KIT,MAGNETO TIMING /SUPERSEDES 11-8150/ . . .	1	1
- 19	¤AN822-8D	. ELBOW	1	1
- 20	¤210360	. GOVERNOR ASSY,PROPELLER	1	1
- 21	¤115167CXZ061005	. DUCT,FUEL PUMP FRESH AIR.	1	1
	¤NAS397-28	. CLAMP,DUCT.	1	1
- 22	¤111716AX3XX32	. DUCT,THROTTLE BODY RAM AIR.	1	1
	¤NAS397-28	. CLAMP,DUCT.	2	1
- 23	NO NUMBER	. CONTROL,MIXTURE /FURNISHED WITH ENGINE/ . . .	1	1
- 24	NO NUMBER	. CUTOFF,IDLE /FURNISHED WITH ENGINE/	1	1
- 25	NO NUMBER	. INJECTION SYSTEM,COMPONENTS /SEE FIG. 49B/. .	1	1

MODEL 95 PARTS CATALOG

FIG. & INDEX NO.	PART NO.	DESCRIPTION 1 2 3 4 5 6 7	UNITS PER ASSY	USABLE ON CODE
49A	95-919100-33	. SYSTEM INSTL,LH ENGINE AIR INDUCTION. . . . . /SEE FIG. 53A/	NP	4
	95-919100-39	. SYSTEM INSTL,LH ENGINE AIR INDUCTION. . . . . /SEE FIG. 53A/	NP	5
	95-919100-34	. SYSTEM INSTL,RH ENGINE AIR INDUCTION. . . . . /SEE FIG. 53A/	NP	4
-	95-919100-40	. SYSTEM INSTL,RH ENGINE AIR INDUCTION. . . . . /SEE FIG. 53A/	NP	5
- 26	¤95-910018	. SHROUD. . . . . /ATTACHING PARTS/	1	1
	AN520-10R	. SCREW	2	
	¤AN970-3	. WASHER.	2	
	¤MS20365-1032	. NUT /SUPERSEDES AN363-1032/ . . . . . ----*----	2	
- 27	¤95-910017-1	. CLAMP /SUPERSEDES 95-910017/. . . . . /ATTACHING PARTS/	1	1
	AN3	. BOLT.	1	
	¤AN310-3	. NUT . . . . . ----*----	1	

CODE	EFFECTIVITY	CODE	EFFECTIVITY
1	TD-453 THRU TD-533	2	TD-453 THRU TD-489
3	TD-490 THRU TD-533	4	TD-453 THRU TD-497
5	TD-498 THRU TD-533		

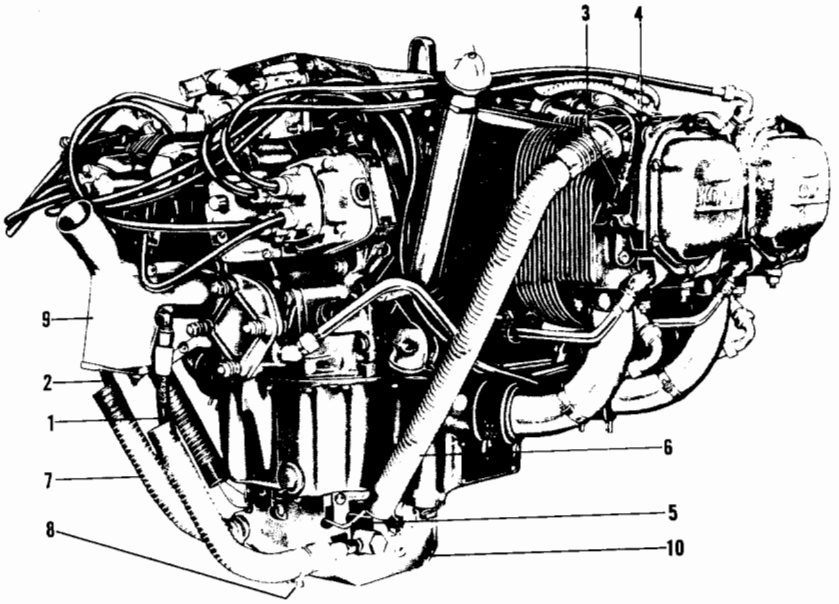

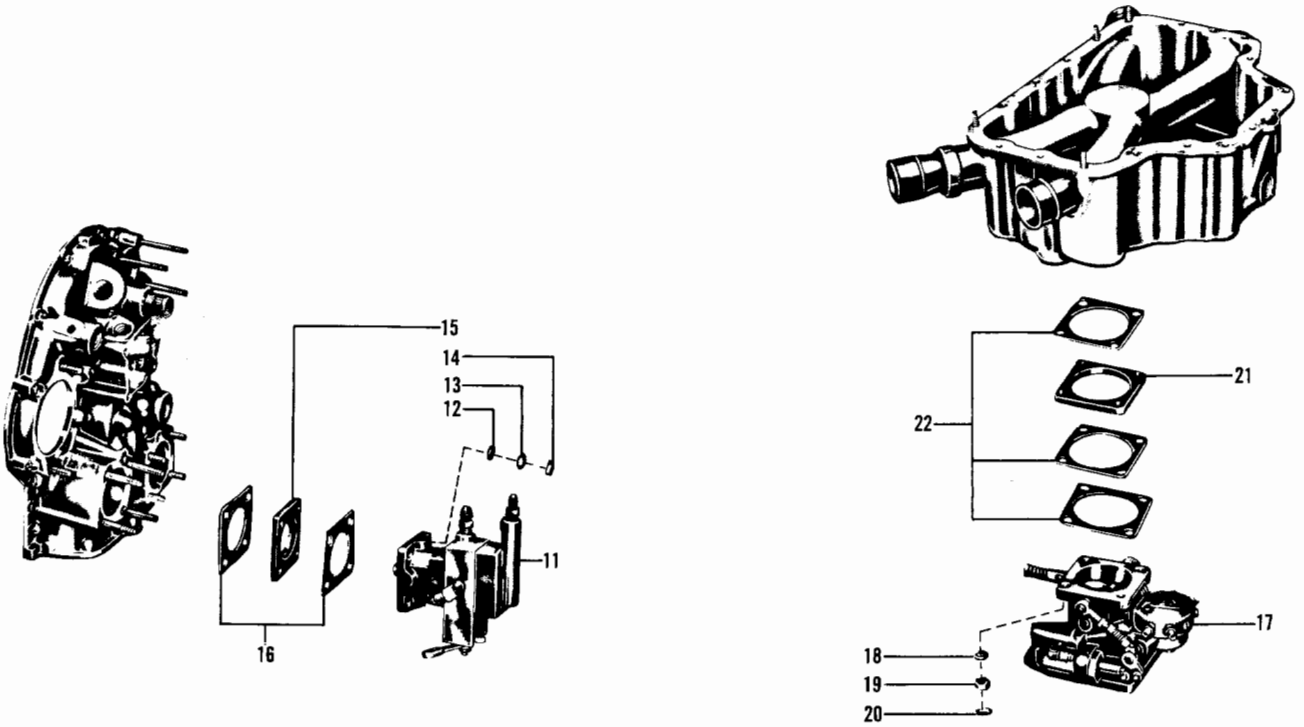

Figure 49B. Fuel Injection Components (TD-453 thru TD-533)

FIG. & INDEX NO.	PART NO.	DESCRIPTION 1 2 3 4 5 6 7	UNITS PER ASSY	USABLE ON CODE
49B-		FUEL INJECTION COMPONENTS		1
- 1	73258	HOSE ASSY,PUMP TO THROTTLE BODY	1	1
- 2	73169	HOSE ASSY,PUMP TO THROTTLE BODY	1	1
- 3	72841	NOZZLE,INJECTION	4	1
- 4	62255	CLAMP	2	1
- 5	73842	TUBE ASSY,FUEL INJECTION LINE	4	1
		/ATTACHING PARTS/		
	73843	CLAMP	3	
	STD692	SCREW,#10-32X1/2	2	
	STD670	NUT,#10-32	2	
		----*----		
	71811	SLEEVE	5	1
- 6	73868	HOSE,COOLING	2	1
- 7	73187	HOSE	2	1
		/ATTACHING PARTS/		
- 8	STD788	CLAMP	2	
		----*----		
	72036	CLIP	1	1
		/ATTACHING PARTS/		
	STD860	SCREW,FILLESTER HEAD #10-32X5/8	1	
	STD28	WASHER,PLAIN #10	1	
	STD670	NUT,SELF-LOCKING #10-32	1	
		----*----		
	73650	CLIP	6	1
		/ATTACHING PARTS/		
	STD8	WASHER,PLAIN 1/4 INCH	3	
	STD1826	SCREW,FILLESTER HEAD 1/4-20X5/8	3	
		----*----		
- 9	73194	SHROUD,FUEL INJECTOR PUMP	1	1
- 10	73195	SHROUD,FUEL INJECTOR THROTTLE BODY	1	1
	73189	GASKET,CARBURETOR SHROUD	1	1
	73839	PUMP & THROTTLE BODY ASSY	1	1
- 11	73163	PUMP ASSY,FUEL INJECTOR	1	1
		/ATTACHING PARTS/		
- 12	STD35	WASHER,PLAIN 5/16 INCH	4	
- 13	STD475	WASHER,INTERNAL TEETH,5/16 INCH LOCK	4	
- 14	STD1410	NUT,PLAIN,5/16-18	4	
		----*----		
- 15	73160	SPACER,FUEL INJECTOR PUMP	1	1
- 16	1691C	GASKET,FUEL PUMP	2	1
- 17	73164	THROTTLE BODY ASSY	1	1
		/ATTACHING PARTS/		
- 18	STD35	WASHER,PLAIN,5/16 INCH	4	
- 19	STD1410	NUT,PLAIN,5/16-18	4	
- 20	STD1763	LOCKNUT,5/16 INCH	4	
		----*----		
- 21	73161	SPACER,THROTTLE BODY	1	1
- 22	66224	GASKET,CARBURETOR	3	1

CODE EFFECTIVITY

1 TD-453 THRU TD-533

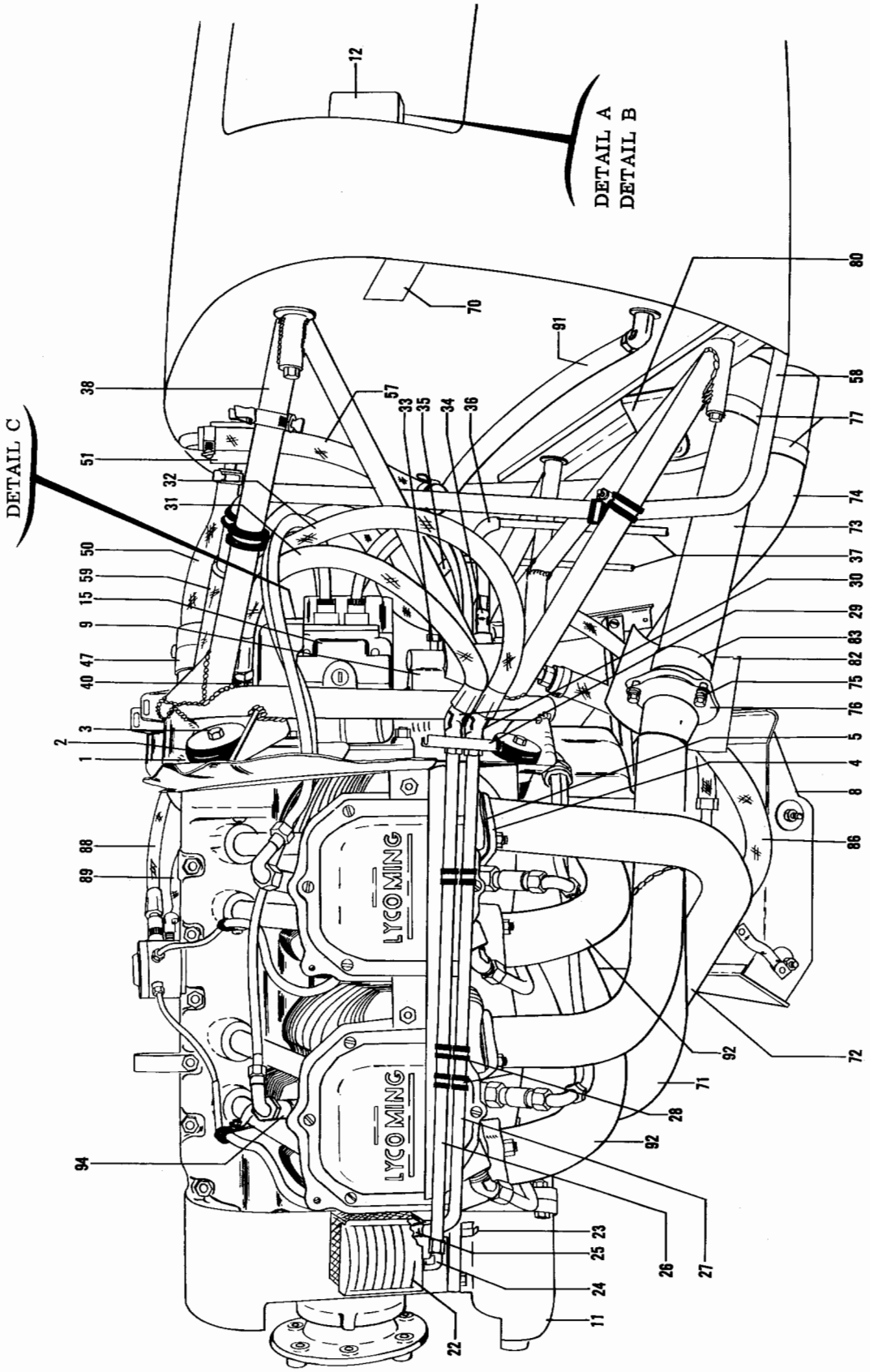

Figure 49C. Power Plant (TD-534 And After) (Sheet 1 of 3 Sheets)

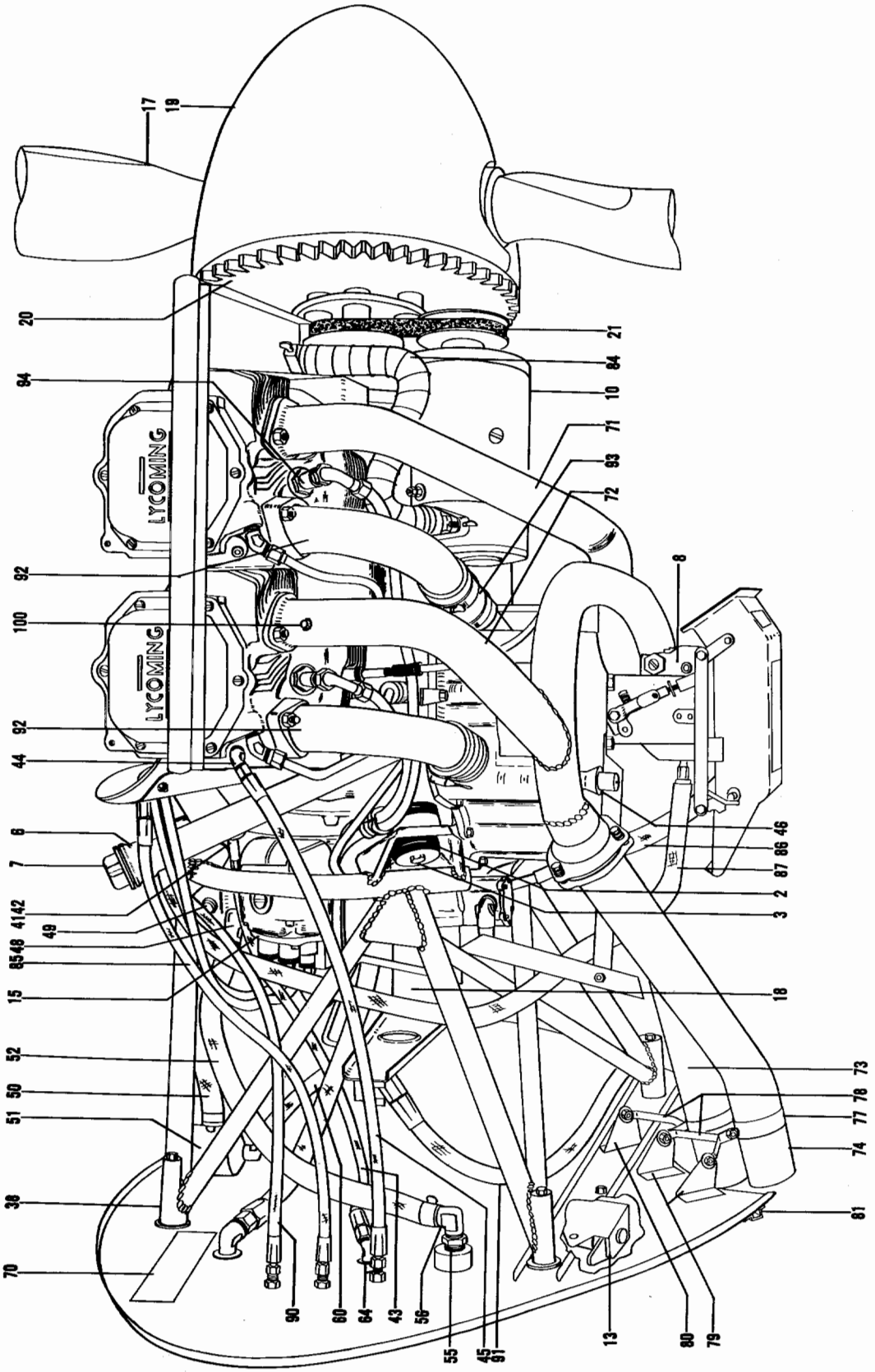

Figure 49C. Power Plant (TD-534 And After) (Sheet 2 of 3 Sheets)

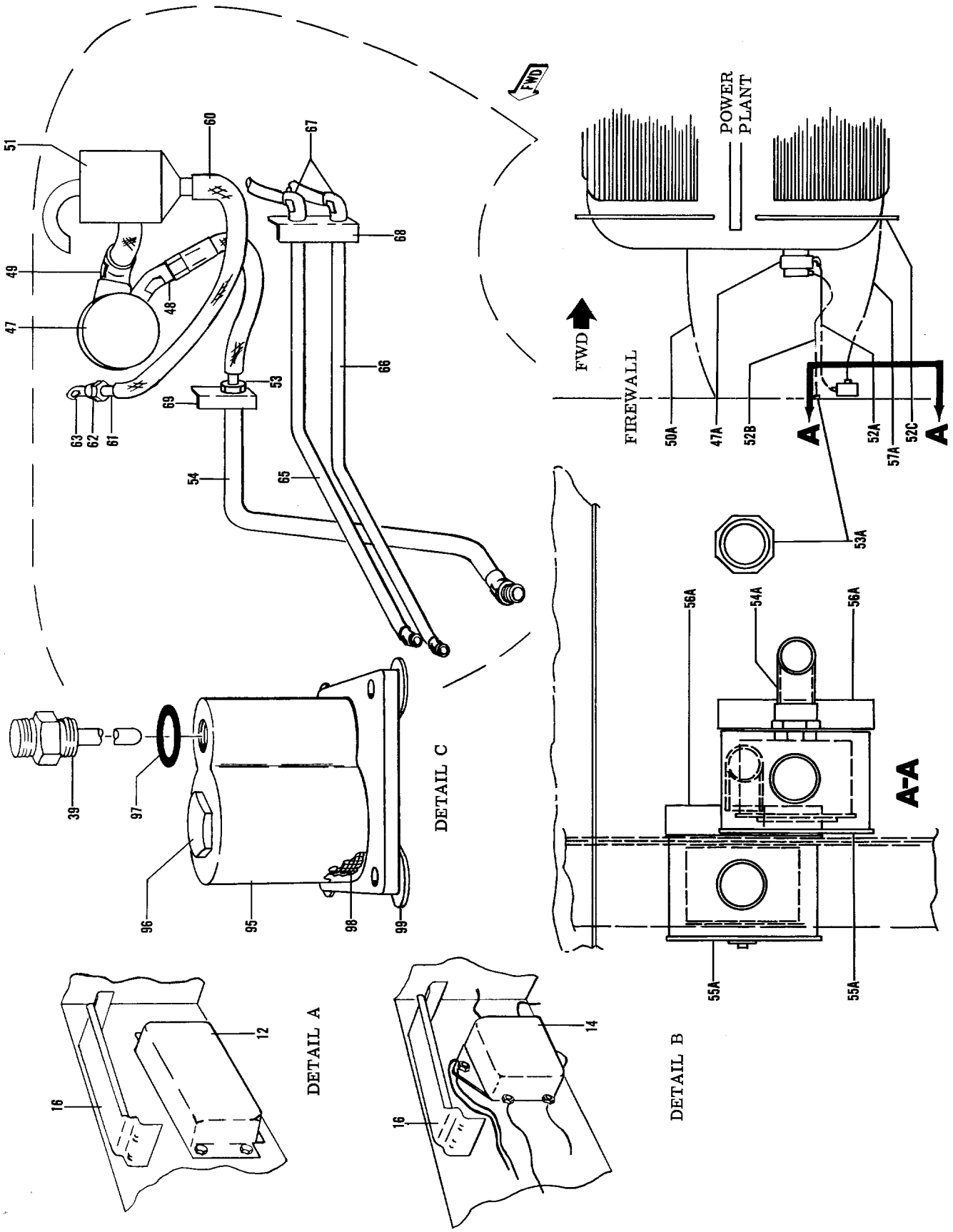

Figure 49C. Power Plant (TD-534 And After) (Sheet 3 of 3 Sheets)

FIG. & INDEX NO.	PART NO.	DESCRIPTION 1 2 3 4 5 6 7	UNITS PER ASSY	USABLE ON CODE
49C-	95-910002-1	POWER PLANT INSTL,LH.	NP	4
	95-910002-2	POWER PLANT INSTL,RH /WITH VACUUM PUMP/	NP	4
	95-910002-4	POWER PLANT INSTL,RH /WITHOUT VACUUM PUMP/. . .	NP	4
	95-910002-5	POWER PLANT INSTL,LH /WITH ALTERNATOR/.	NP	4
	95-910002-6	POWER PLANT INSTL,RH. . . . . /WITH ALTERNATOR & VACUUM PUMP/	NP	4
	95-910002-8	POWER PLANT INSTL,RH. . . . . /WITH ALTERNATOR & WITHOUT VACUUM PUMP/	NP	4
	95-910002-101	POWER PLANT INSTL,LH /WITH AIR PUMP/.	NP	5
	95-910002-102	POWER PLANT INSTL,RH /WITH AIR PUMP/.	NP	5
	95-910002-103	POWER PLANT INSTL,LH. . . . . /WITH ALTERNATOR AND AIR PUMP/	NP	5
	95-910002-104	POWER PLANT INSTL,RH. . . . . /WITH ALTERNATOR AND AIR PUMP/	NP	5
- 1	¤J7402-1	. MOUNT ASSY.	4	1
- 2	95-910002-95	. SPACER ASSY,MOUNT . . . . . /ATTACHING PARTS/	4	1
	AN426AD5	. RIVET	4	
		----*----		
	IO-360-B1B	. ENGINE. . . . . /ATTACHING PARTS/	1	1
- 3	¤AN7-34A/M/	. BOLT.	4	
	¤AN960-716	. WASHER.	4	
	¤MS20365-720/M/	. NUT /SUPERSEDES AN365-720/.	4	
		----*----		
- 4	¤61260	. . FLANGE,EXHAUST STACK.	4	1
- 5	¤65321	. . GASKET,EXHAUST STACK /SUPERSEDES 67196/ . .	4	1
- 6	72373	. . TUBE,OIL FILLER	1	1
- 7	72418	. . DIPSTICK,OIL.	1	1
- 8	RSA5AD1	. . FUEL INJECTION SYSTEM,BENDIX /SEE FIG. 49D/	1	1
- 9	¤75506	. . FUEL PUMP /SUPERSEDES 75131/.	1	1
- 10	1101905	. . GENERATOR,25 AMP /SEE FIG. 49J/	1	1
	¤1105052	. . GENERATOR,40 AMP /OPTIONAL/ /SEE FIG. 49J/.	1	1
	¤75220	. . ALTERNATOR,24V-50 AMP /SUPERSEDES 74879/. .	1	1
	72464	. . STARTER /SUPERSEDES 72337/.	1	2
- 11	¤76212	. . STARTER /SEE FIG. 49I/.	1	3
	¤72462	. . STARTER /ALTERNATE FOR 76212/	1	3
- 12	¤1118976	. . VOLTAGE REGULATOR,25 AMP /SEE FIG. 49H/ . .	1	4
	¤1119237C	. . VOLTAGE REGULATOR,40 AMP. . . . . /ATTACHING PARTS/	1	4
	¤AN4-7A/M/	. . BOLT.	3	
		----*----		
- 13	¤6041H190	. . RELAY,STARTER . . . . . /ATTACHING PARTS/	1	1
	¤NAS222-9	. . SCREW,RH SIDE ONLY.	2	
	¤NAS222-19	. . SCREW,LH SIDE ONLY.	2	
	AN935-416L	. . WASHER.	2	
	NAS43DD4-40	. . SPACER.	2	
	AN360-4	. . NUT	2	
		----*----		
- 14	¤1116902	. . RELAY,PARALLELING RH ENGINE ONLY. . . . . /SUPERSEDES 71349/ /ATTACHING PARTS/	1	1
	AN4	. . BOLT.	2	
	AN366DF428	. . NUTPLATE.	2	
		----*----		
- 15	¤S4LN21	. . MAGNETO,LH /10-51360-30/.	1	1
	¤S4LN20	. . MAGNETO,RH /10-51360-29/.	1	1
- 16	95-369012	. SHIELD,VOLTAGE REGULATOR & PARALLELING RELAY/ /ATTACHING PARTS/	3	4
	AN520-6	. SCREW	6	
	¤AN960-6	. WASHER.	6	
	¤MS20365-632	. NUT	6	
		----*----		

FIG. & INDEX NO.	PART NO.	DESCRIPTION 1 2 3 4 5 6 7	UNITS PER ASSY	USABLE ON CODE
49C- 17	¤HC92WK2B/	. PROPELLER ASSY /SEE FIG. 49K/	1	1
	W8447-12A	/SUPERSEDES HC92ZK2B/8447-12A/		
	95-960006-603	. PROPELLER ASSY /WITH ANTI-ICER SHOES/	1	1
		/ATTACHING PARTS/		
	¤AN4H7A/M/	. BOLT.	6	
		----*----		
- 18	¤210360	. GOVERNOR,PROPELLER.	1	1
- 19	835-16	. SPINNER ASSY,UNPOLISHED	1	1
	¤835-6P	. SPINNER ASSY,POLISHED /SUPERSEDES 835-6/. . .	1	1
		/ATTACHING PARTS/		
	AN525-10R	. SCREW	14	
		----*----		
- 20	¤72287	. RING GEAR /USE WITH ANTI-ICE/	1	1
	60882	. RING GEAR /USE WITHOUT ANTI-ICE/.	1	1
		/ATTACHING PARTS/		
	¤AN4-10A/M/	. BOLT.	12	
	¤AN960-416	. WASHER.	12	
	¤MS20365-428	. NUT /SUPERSEDES AN365-428/.	12	
		----*----		
- 21	¤72270	. BELT,GENERATOR /25 AMP/	1	1
	¤72871	. BELT,GENERATOR /40 AMP/	1	1
	¤72000	. BELT,ALTERNATOR /50 AMP/.	1	1
- 22	¤8526250	. COOLER,OIL.	1	1
		/ATTACHING PARTS/		
	AN520-8R	. SCREW	1	
	¤AN960-8	. WASHER.	1	
	¤MS20365-832	. NUT /SUPERSEDES AN365-832/.	1	
		----*----		
- 23	¤95-910001-191	. ANGLE,OIL COOLER SUPPORT.	1	1
		/ATTACHING PARTS/		
	AN507-8R	. SCREW	1	
		----*----		
- 24	95-910001-107	. ELBOW	1	1
- 25	¤AN822-8	. ELBOW	1	1
- 26	¤601000-8D18-5/8	. HOSE ASSY,OIL OUT	1	1
- 27	¤601000-8D24	. HOSE ASSY,OIL IN.	1	1
- 28	¤MS21919DG10	. CLAMP	6	1
		/ATTACHING PARTS/		
	AN507-832	. SCREW	3	
	¤AN960D8	. WASHER.	3	
	NAS43DD3-22	. SPACER,FWD & AFT.	2	
	NAS43DD3-16	. SPACER,CENTER	1	
	¤MS20365-832	. NUT /SUPERSEDES AN365-832/.	3	
		----*----		
- 29	95-910001-141	. BRACKET	1	1
- 30	AN837-8D	. ELBOW	2	1
	¤AN960-1216	. WASHER.	2	1
	¤AN924-8D	. NUT	2	1
- 31	¤MS28741-8-0184	. HOSE ASSY,OIL IN.	1	1
- 32	MS28741-8-0244	. HOSE ASSY,OIL OUT	1	1
- 33	¤AN844-4	. ELBOW	1	1
- 34	¤45-939120	. RESTRICTOR ASSY	1	1
- 35	95-910002-13	. HOSE,DRAIN.	1	1
- 36	95-910002-9	. HOSE,DRAIN.	1	1
- 37	95-910002-11	. TUBE,DRAIN.	2	1
	¤MS35489-6	. GROMMET /SUPERSEDES AN931-4-7/.	2	1
- 38	¤95-910005	. MOUNTING ASSY,ENGINE.	1	1
		/ATTACHING PARTS/		
	¤AN6-35A/M/	. BOLT.	4	
	¤AN960-616	. WASHER.	4	
	¤MS20365-624	. NUT /SUPERSEDES AN365-624/.	4	
		----*----		
- 39	¤MS28034-1	. BULB,OIL TEMPERATURE.	1	1

FIG. & INDEX NO.	PART NO.	DESCRIPTION 1 2 3 4 5 6 7	UNITS PER ASSY	USABLE ON CODE
49C- 40	¤AN823-8	ELBOW	1	1
- 41	¤189717	RESTRICTOR,OIL PRESSURE	1	1
- 42	AN941-1	ELBOW	1	1
- 43	¤MS28741-4-0184	HOSE ASSY,OIL PRESSURE LH	1	1
	¤MS28741-4-0140	HOSE ASSY,OIL PRESSURE RH	1	1
- 44	¤45-939120	RESTRICTOR,MANIFOLD PRESSURE.	1	1
- 45	¤MS28741-4-0190	HOSE ASSY,MANIFOLD PRESSURE LH.	1	1
	¤MS28741-4-0200	HOSE ASSY,MANIFOLD PRESSURE RH.	1	1
- 46	¤BJ1000AH4T	OIL SUMP DRAIN.	1	1
- 47	¤G455PM	PUMP,VACUUM /SUPERSEDES G455/ /SEE FIG. 49F/	1	4
- 47A	200CC	PUMP,PRESSURE	1	5
- 48	¤AN844-8	ELBOW,LOWER	1	4
- 49	¤AN842-8	ELBOW,UPPER	1	4
- 50	106200FR8-35	HOSE,LH /ORDER 1/2 ID MIL7938 X 8 3/4 IN./.	1	4
- 50A	95-910001-239	TUBE,LH ENGINE BREATHER	1	5
	106200FR8-36	HOSE,RH /ORDER 1/2 ID MIL7938 X 9 IN./.	1	4
	95-910001-237	TUBE,RH ENGINE BREATHER	1	5
	¤AN737RM30	CLAMP	2	4
- 51	¤95-380009	OIL SEPARATOR /ATTACHING PARTS/	1	4
	NAS221-6	SCREW	2	
	¤NAS697A3	NUT PLATE	2	
		----*----		
- 52	106200H8-35	HOSE,VACUUM LH. /ORDER 1/2 ID MIL7938,SPECIFY LENGTH/	1	4
- 52A	95-910002-109	HOSE,VACUUM LH.	1	5
	106200H8-60	HOSE,VACUUM RH. /ORDER 1/2 ID MIL7938 X 15 IN./	1	4
- 52B	95-910002-107	HOSE,VACUUM RH.	1	5
- 52C	NAS557-20A	GROMMET	1	5
	¤AN737RM30	CLAMP	2	1
- 53	AN807-8D	ADAPTER,RH.	1	4
- 53A	1K43-12-12	FITTING	1	5
	¤AN924-8D	NUT	1	4
- 54	95-910001-244	TUBE,RH	1	4
- 54A	1J1-4	FILTER.	1	5
- 55	¤AN912-4D	REDUCER	1	4
- 55A	95-910033-7	COVER ASSY.	1	5
- 56	¤AN842-8D	ELBOW,LH.	1	4
- 56A	95-910002-105	BRACKET	1	5
	¤AN822-8D	ELBOW,RH.	1	4
- 57	106200FR8-70	HOSE,LH /ORDER 1/2 ID MIL7938 X 17 1/2 IN./	1	4
- 57A	115167CXZ060444	HOSE,RH	1	5
	115167CXZ070644	HOSE,LH	1	5
	1K1-6-12	FITTING	2	5
	106200FR8-54	HOSE,RH /ORDER 1/2 ID MIL7938 X 14 IN./	1	4
	¤AN737RM30	CLAMP	2	4
- 58	¤95-910001-233	TUBE ASSY,LH.	1	4
	¤95-910001-235	TUBE ASSY,RH.	1	4
- 59	106200FR12-24	HOSE,LH /ORDER 3/4 ID MIL7938 X 6 IN./.	1	4
	106200FR12-56	HOSE,RH /ORDER 3/4 ID MIL7938 X 14 IN./	1	4
	¤AN737RM38	CLAMP	2	4
- 60	106200FR4-54	HOSE,LH /ORDER 1/4 ID MIL7938 X 13 1/2 IN./	1	4
	106200FR4-52	HOSE,RH /ORDER 1/4 ID MIL7938 X 13 IN./	1	4
	¤AN737RM22	CLAMP	2	4
- 61	95-910001-69	TUBE ASSY	1	4
- 62	¤AN912-3	REDUCER	1	4
- 63	¤AN822-4D	ELBOW	1	4
- 64	¤AN837-4	ELBOW,LH.	2	1
	¤AN833-4	ELBOW,RH.	2	1
	¤AN924-4	NUT	2	1
- 65	95-910001-147	TUBE ASSY,RH.	1	1
- 66	95-910001-149	TUBE ASSY,RH.	1	1

FIG. & INDEX NO.	PART NO.	DESCRIPTION 1 2 3 4 5 6 7	UNITS PER ASSY	USABLE ON CODE
49C- 67	¤AN833-4D	. ELBOW /RH ONLY/	2	1
	¤AN960D416	. WASHER /RH ONLY/.	2	1
	¤AN924-4D	. NUT	2	1
- 68	95-910001-151	. ANGLE,RH.	1	1
- 69	95-910001-195	. ANGLE,RH.	1	1
		/ATTACHING PARTS/		
	AN515-832	. SCREW	2	
	¤AN366F832	. NUT PLATE	2	
		----*----		
- 70	95-910020	. PLACARD,MAGNETO DISCONNECT INSTRUCTIONS . . .	2	1
- 71	¤95-910001-169	. EXHAUST ASSY,LH ENGINE #1 & #2 CYLINDER . . .	1	1
	¤95-910001-171	. EXHAUST ASSY,RH ENGINE #1 & #2 CYLINDER . . .	1	1
- 72	¤95-910001-35	. EXHAUST ASSY,LH ENGINE #3 & #4 CYLINDER . . .	1	1
	96-324101-3	. EXHAUST ASSY,LH ENGINE #3 & #4 CYLINDER . . .	1	1
		/WITH ALCOR BOSS WELDED IN/		
	¤95-910001-59	. EXHAUST ASSY,RH ENGINE #3 & #4 CYLINDER . . .	1	1
	96-324101-4	. EXHAUST ASSY,RH ENGINE #3 & #4 CYLINDER . . .	1	1
		/WITH ALCOR BOSS WELDED IN/		
		/ATTACHING PARTS/		
	¤AN340C516	. NUT	4	
	AN340D516	. NUT /ALTERNATE FOR AN340C516/	4	
		----*----		
- 73	¤95-910001-209	. EXHAUST TAIL PIPE,LH ENGINE OUTBD	1	1
	¤95-910001-211	. EXHAUST TAIL PIPE,RH ENGINE INBD.	1	1
- 74	¤95-910001-213	. EXHAUST TAIL PIPE,LH ENGINE INBD.	1	1
	¤95-910001-215	. EXHAUST TAIL PIPE,RH ENGINE OUTBD	1	1
		/ATTACHING PARTS/		
	¤AN3-12/M/	. BOLT.	3	
	¤AN960-10L	. WASHER.	3	
- 75	¤100943CR-ZX020F	. SPRING.	3	
	¤AN310-3	. NUT	3	
	¤MS24665-132	. COTTER PIN /SUPERSEDES AN380-2-2/	3	
		----*----		
- 76	186-4	. BALL JOINT.	2	1
- 77	¤35-950126	. CLAMP,EXHAUST	2	1
- 78	¤35-910003-43	. LINK.	4	1
		/ATTACHING PARTS/		
	¤AN3-4/M/	. BOLT.	1	
	¤AN960-10	. WASHER.	1	
	¤AN970-3	. WASHER /INSTALL ONE EACH SIDE OF.	6	
		95-910001-157 & 95-910001-155 BRACKETS/		
	¤AN310-3	. NUT	1	
	¤MS24665-132	. COTTER PIN /SUPERSEDES AN380-2-2/	1	
		----*----		
- 79	¤95-910001-157	. BRACKET,LH.	2	1
	¤95-910001-158	. BRACKET,RH.	2	1
- 80	¤95-910001-155	. BRACKET,LH.	1	1
	¤95-910001-156	. BRACKET,RH.	1	1
		/ATTACHING PARTS/		
	AN220	. SCREW	7	
	¤AN960-8	. WASHER.	7	
	¤MS20364-832	. NUT	7	
		----*----		
- 81	95-910001-117	. HAT SECTION,LH EXHAUST BRACKET SUPPORT. . . .	1	1
	95-910001-118	. HAT SECTION,RH EXHAUST BRACKET SUPPORT. . . .	1	1
	95-910015-329	. BAFFLE INSTL /SEE FIG. 50/.	NP	1
	95-919100-41	. AIR INDUCTION SYSTEM LH /SEE FIG. 53/	NP	1
	95-919100-42	. AIR INDUCTION SYSTEM RH /SEE FIG. 53/	NP	1
- 82	¤95-910018-3	. SHROUD,FUEL PUMP HEAT	1	
		/ATTACHING PARTS/		
	AN520-10R	. SCREW	2	
	¤AN970-3	. WASHER.	2	
	¤AN960-10	. WASHER.	4	
	¤MS20365-1032	. NUT /SUPERSEDES AN363-1032/	2	
		----*----		

FIG. & INDEX NO.	PART NO.	DESCRIPTION 1 2 3 4 5 6 7	UNITS PER ASSY	USABLE ON CODE
49C- 83	¤95-910017-1	. CLAMP,SHROUD.	1	
		/ATTACHING PARTS/		
	AN3	. BOLT.	1	
	¤AN310-3	. WASHER.	1	
		----*----		
- 84	¤111716AX2XX30	DUCT,GENERATOR BLAST.	1	1
- 85	¤MS28741-4-0190	HOSE,PROP ANTI-ICER LH.	1	1
	¤MS28741-4-0400	HOSE,PROP ANTI-ICER RH.	1	1
- 86	74590	HOSE,FUEL SUPPLY FROM FUEL PUMP TO INJECTOR . .	1	1
- 87	74587	HOSE,FUEL SUPPLY FROM FUEL INJECTOR TO BAFFLE .	1	1
- 88	74586	HOSE,FUEL SUPPLY FROM BAFFLE TO DIVIDER VALVE .	1	1
- 89	MS28741-3-0122	HOSE ASSY,FUEL PRESSURE LH.	1	1
	95-920020-1	HOSE ASSY,FUEL PRESSURE RH.	1	1
- 90	MS28741-3-0180	HOSE ASSY,FUEL PRESSURE LH & RH	2	1
- 91	¤MS28741-6-0250	HOSE ASSY,PROP ACCUMULATOR.	1	1
- 92	70485	PIPE,INTAKE	4	1
- 93	¤69603	HOSE,1 3/4IDX2 3/16ODX1 3/4 IN LONG	4	1
- 94	¤SR88	SPARK PLUG /AC/	8	1
	¤REM40E	SPARK PLUG /CHAMPION/	8	1
- 95	¤69510	HOUSING,THERMOSTATIC VALVE & OIL PRESS. SCREEN.	1	1
- 96	69451	VALVE ASSY,TEMP CONTROL OIL COOLER BY PASS. . .	1	1
- 97	¤STD294	GASKET,ANNULAR.	1	1
- 98	¤62817	SCREEN ASSY,OIL PRESSURE.	1	1
- 99	¤61173	GASKET,OIL PRESSURE HOUSING	1	1
-100	¤MODEL 106B	PROBE,EXHAUST TEMPERATURE	1	1

CODE	EFFECTIVITY	CODE	EFFECTIVITY
1	TD-534 AND AFTER	2	TD-534 THRU TD-592
3	TD-593 AND AFTER	4	TD-534 THRU TD-707
5	TD-708 AND AFTER		

BLANK PAGE

"As of publication date,
no illustration available"

Figure 49D. Fuel Injection Components (TD-534 & after)

FIG. & INDEX NO.	PART NO.	DESCRIPTION 1 2 3 4 5 6 7	UNITS PER ASSY	USABLE ON CODE
49D-	2524147	CONTROL ASSY,SERVO VALVE REGULATOR	1	1
	2522267	. CONTROL ASSY,SERVO VALVE REGULATOR	1	1
	2520886	. . BODY ASSY,MAIN	1	1
	2520884	. . . BODY,MAIN	1	1
	384583	. . . INSERT,HELI-COIL	4	1
	2520875	. . . PIN,SHOULDER HEADLESS	2	1
	909196-K1	. . . PIN	1	1
	367725	. . . BEARING	2	1
	367970	. . VENTURI ASSY	1	1
	367949	. . . VENTURI,TUBE	1	1
	P-70249	. . . TUBE,IMPACT	4	1
	379-S-138	. . PACKING,PREFORMED	3	1
	P-21819	. . SCREW,#10-24	1	1
	AN960-10L	. . WASHER	1	1
	367631	. . SHAFT ASSY,THROTTLE	1	1
	367653	. . . SHAFT,THROTTLE	1	1
	AN960-C516L	. . . WASHER	1	1
	2520920	. . STOP,THROTTLE	1	1
	904269-K1	. . SCREW,IDLE ADJUSTMENT	1	1
	P-60219	. . SPRING	1	1
	2521196	. . LEVER	1	1
	AN310-5	. . NUT,CASTLE	1	1
	AN380-2-2	. . COTTER PIN	1	1
	367639	. . VALVE,THROTTLE	1	1
	MS35337-4	. . WASHER,LOCK	2	1
	P-4235	. . SCREW,FILLISTER HEAD #8-32NC	2	1
	P-15782	. . PIN,SPLIT TAPER	1	1

FIG. & INDEX NO.	PART NO.	DESCRIPTION 1 2 3 4 5 6 7	UNITS PER ASSY	USABLE ON CODE
49D-	2522273	STRAINER ASSY	1	1
	2521566	PLUG	1	1
	2521738	SCREEN	1	1
	2522271	ELBOW	1	1
	2522272	TUBE	1	1
	133176	PLUG	1	1
	557-S-6	PACKING,PREFORMED	2	1
	2521145	SEAT,REGULATOR VALVE	1	1
	2521144	INSERT,REGULATOR VALVE SEAT	1	1
	2520887	DIAPHRAGM ASSY,FUEL CENTER REGULATOR	1	1
	2520888	DIAPHRAGM,FUEL CENTER REGULATOR	1	1
	2520631	WASHER,DIAPHRAGM	2	1
	2520635	STEM,REGULATOR	1	1
	2520646	VALVE ASSY,SERVO	1	1
	2520647	RETAINER,VALVE	1	1
	193902	BALL	1	1
	2520882	BODY,REGULATOR	1	1
	2520895	BUSHING ASSY,REGULATOR	1	1
	2520873	BUSHING,REGULATOR CENTER BODY	1	1
	2520874	BUSHING,REGULATOR STEM	1	1
	2520872	SEAL,REGULATOR STEM	1	1
	2520652	SPRING,CONSTANT EFFORT	1	1
	2520890	DIAPHRAGM ASSY,AIR REAR REGULATOR	1	1
	2520891	DIAPHRAGM,AIR REAR REGULATOR	1	1
	2520632	WASHER,CUP	2	1
	2520650	RETAINER,DIAPHRAGM	1	1
	2520625	SPRING,CONSTANT HEAD	1	1
	2520636	RETAINER,SPRING	1	1
	2522158	COVER,REGULATOR	1	1
	AN960-10L	WASHER	8	1
	P-61195	PLUG,TAPER SEAT	3	1
	2520879	PLATE,MIXTURE CONTROL	1	1
	362842	SCREW,COVER ATTACHING	6	1
	383493	PLUG	1	1
	365533	GASKET	1	1
	2520892	LEVER ASSY,MIXTURE CONTROL	1	1
	367695	LEVER	1	1
	2520692	SHAFT,MIXTURE CONTROL	1	1
	P-19086	PIN,TAPER	1	1
	909091-K35	PIN,SPRING	1	1
	2520878	BUSHING	1	1
	367694	HOLDER,SPRING	1	1
	342617	SPRING	1	1
	315-S-5	PACKING,PREFORMED	1	1
	338491	WASHER,C	1	1
	2520893	LEVER ASSY,IDLE VALVE	1	1
	2520894	BUSHING	1	1
	367421	LEVER	1	1
	P-14577	PIN	1	1
	2520881	STEM	1	1
	367757	WASHER	1	1
	315-S-5	PACKING,PREFORMED	1	1
	2521287	LEVER,MIXTURE CONTROL	1	1
	2520626	VALVE,IDLE	1	1
	2520880	VALVE,MIXTURE CONTROL	1	1
	367386	PACKING,PREFORMED	1	1
	559-S-20	PACKING,PREFORMED	2	1
	367962	SPACER	1	1
	399847	SCREW,FILLISTER HEAD #10-24X.750	1	1
	187313	NUT,ELASTIC STOP /.3125-24/	1	1
	AN503-10-6	SCREW	1	1
	901138-K1	WASHER	2	1
	379-S-21	PACKING,PREFORMED	1	1
	367547	SCREW ASSY,IDLE	1	1
	367546	SCREW,ADJUSTMENT	1	1
	367545	PLATE	1	1
	367418	CLEVIS,ADJUSTMENT	1	1

FIG. & INDEX NO.	PART NO.	DESCRIPTION 1 2 3 4 5 6 7	UNITS PER ASSY	USABLE ON CODE
49D-	2522022	PIN,CLEVIS	1	1
	2520387	SPRING	1	1
	2520876	CLEVIS,IDLE	1	1
	177718	WASHER,SPRING	1	1
	2522021	PIN,CLEVIS	1	1
	119246	WASHER,SPRING	1	1
	AN503-10-8	SCREW	2	1
	AN960-10L	WASHER	1	1
	AN960-416L	WASHER	1	1
	901200	COTTER PIN	1	1
	557-S-4	PACKING	2	1
	P-8508	PLUG,1/8 PIPE	1	1
	118869	FITTING,.4375/20 THREAD	1	1
	132906	PLUG,7/16-20	1	1

CODE EFFECTIVITY

1 TD-534 AND AFTER

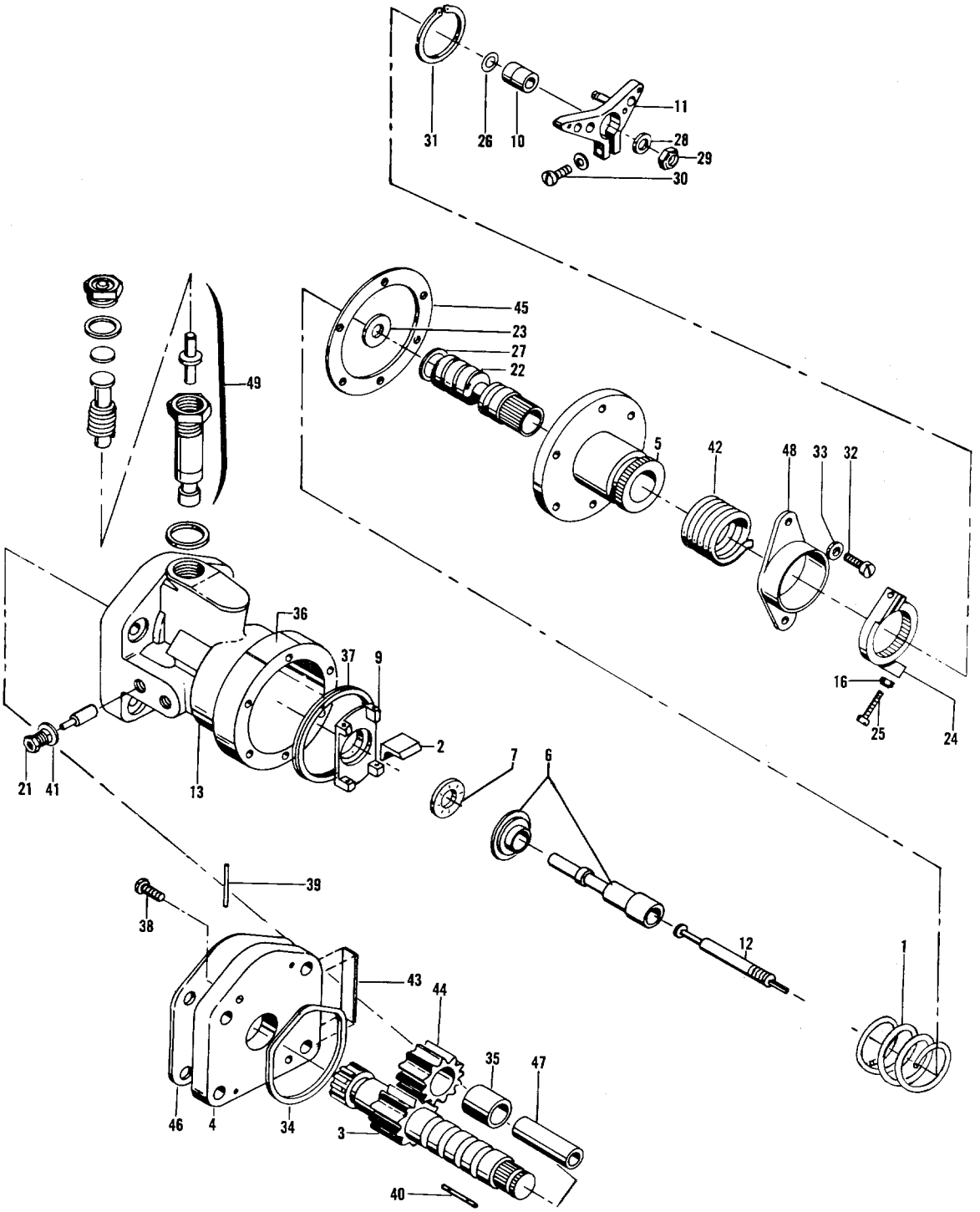

Figure 49E. Propeller Governor (TD-1 thru TD-452)

FIG. & INDEX NO.	PART NO.	DESCRIPTION 1 2 3 4 5 6 7	UNITS PER ASSY	USABLE ON CODE
49E-	210195	GOVERNOR ASSY,PROPELLER /SEE FIG. 49 FOR NHA/	2	1
	210300	GOVERNOR ASSY,PROPELLER /SEE FIG. 49 FOR NHA/	2	2
	192316	SPRING,SPEEDER	1	1
- 1	192315	SPRING,SPEEDER	1	2
	196000	FLYWEIGHT	2	1
- 2	210284	FLYWEIGHT	8	2
- 3	210123	GEAR,PUMP DRIVE	1	3
- 4	210022	BASE,GOVERNOR	1	3
- 5	210023	COVER,GOVERNOR	1	3
- 6	210124	PILOT VALVE & PLUNGER	1	3
- 7	180004	BEARING,PILOT VALVE	1	3
- 9	210111	HEAD,FLYWEIGHT	1	3
- 10	210034	BUSHING,LIFT ROD	1	1
- 11	210146	LEVER ASSY,SPEED ADJUSTING	1	3
- 12	210044	LIFT ROD,PILOT VALVE	1	3
- 13	210109	BODY,GOVERNOR	1	3
	188036	NUT	1	1
- 16	188302	NUT	1	2
- 21	190734	PLUG,PIPE	6	3
- 22	210100	SHAFT & WORM ASSY,SPEED ADJUSTING	1	3
- 23	210101	SEAT,UPPER SPRING	1	3
- 24	400433	STOP RING	1	3
	190576	SCREW,STOP	1	1
- 25	218537	SCREW,STOP	1	2
- 26	182194	O RING	1	3
	182309	O RING	1	1
- 27	182684	O RING	1	2
- 28	186283	WASHER	1	3
- 29	189522	STOP NUT,ELASTIC	1	3
- 30	188434	SCREW	1	3
- 31	189880	RING,RETAINING	1	3
- 32	189482	SCREW	6	3
- 33	189739	WASHER,LOCK	7	3
- 34	206336	RING,OIL SEAL	1	3
- 35	210036	BEARING,IDLER GEAR	1	3
- 36	223003	DECAL	1	3
- 37	192103	RING,SPIROLOX RETAINING	1	3
- 38	218036	SCREW,FILLISTER HEAD	2	3
- 39	210112	PIN,FLYWEIGHT	2	3
- 40	184793	PIN,DOWEL	2	3
- 41	190733	WASHER	3	3
- 42	191869	SPRING,CONTROL LEVER	1	3
- 43	193385	NAMEPLATE	1	3
- 44	204864	GEAR,PUMP IDLER	1	3
- 45	206337	GASKET,COVER	1	3
- 46	MS100009	GASKET,MOUNTING	1	3
- 47	210031	STUD,IDLER GEAR	1	3
- 48	210035	RETAINER,SPRING	1	3
- 49	210067	VALVE ASSY,RELIEF	1	3

CODE	EFFECTIVITY	CODE	EFFECTIVITY
1	TD-1 THRU TD-434 EXCEPT TD-390, TD-415, TD-424, TD-428, TD-430 AND TD-432	2	TD-390, TD-415, TD-424, TD-428, TD-430, TD-432, TD-435 THRU TD-452
3	TD-1 THRU TD-452		

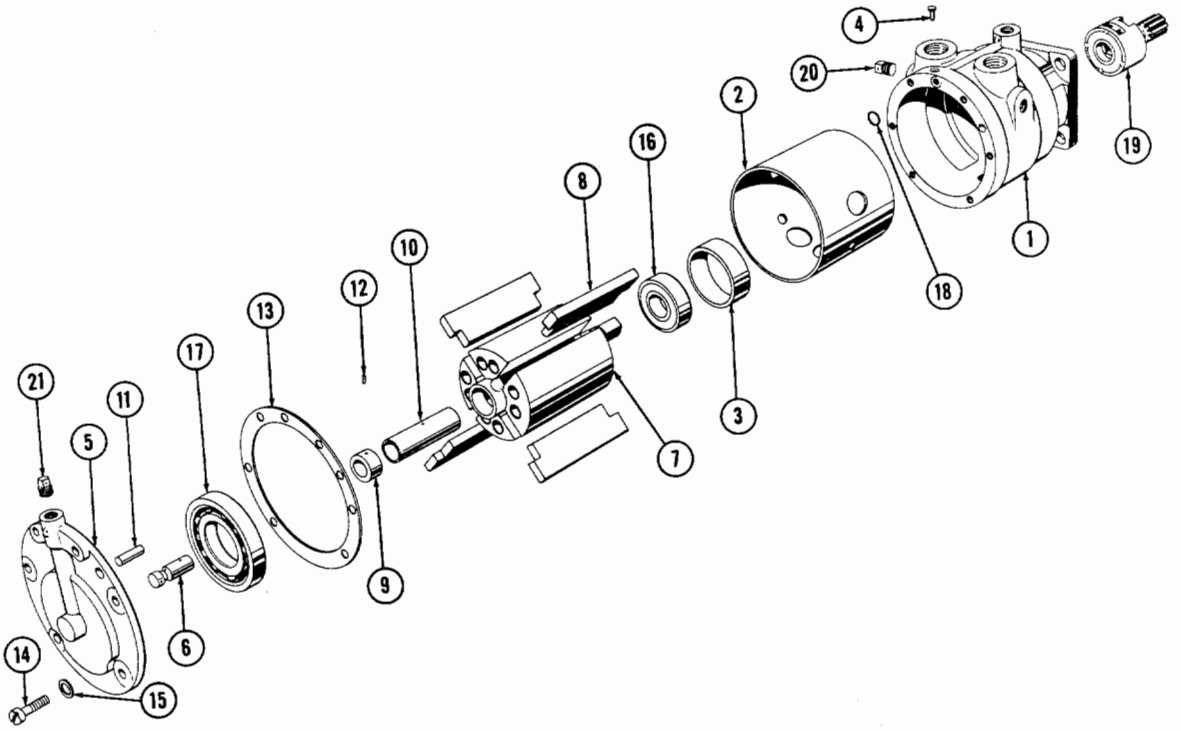

Figure 49F. Vacuum Pump

FIG. & INDEX NO.	PART NO.	DESCRIPTION 1 2 3 4 5 6 7	UNITS PER ASSY	USABLE ON CODE
49F-	G-455	PUMP,VACUUM /SEE FIG. 49,49A & 49C FOR NHA/	2	
	G-455L	PUMP,VACUUM /SEE FIG. 49 FOR NHA/	2	
	G-450-21-1	BODY ASSY /WITH WINTERIZATION PORTS/	1	
- 1	G-450-1	BODY	1	
- 2	G-450-4	SLEEVE	1	
- 3	G-450-9	SLEEVE,OIL SEAL	1	
- 4	G-450-10	PIN,ANCHOR	1	
	G-450-22	COVER ASSY	1	
- 5	G-450-2	COVER	1	
- 6	G-450-6	PIN,OIL METERING	1	
- 7	G-450-3	ROTOR	1	
- 8	G-450-5	BLADE	4	
- 9	G-450-7	COLLAR,OIL METERING	1	
- 10	G-450-8	PIN,CENTER	1	
- 11	G-450-11	PIN,DOWEL	1	
- 12	G-450-12	PIN,METERING COLLAR	1	
- 13	G-450-13	GASKET,.001	1	
	G-450-14	GASKET,.003	1	
- 14	G-450-17	SCREW	4	
	G-450-21	SCREW	2	
- 15	G-450-18	WASHER	6	
- 16	G-450-19	BEARING,DRIVE END	1	
- 17	G-450-20	BEARING,COVER	1	
- 18	G-450-23	O RING	1	
- 19	207-16C	COUPLING	1	
	G-450-16	COUPLING	1	
- 20	G-450-24	PLUG,1/8 PIPE	1	
- 21	AN913-1	PLUG,1/8 PIPE	4	

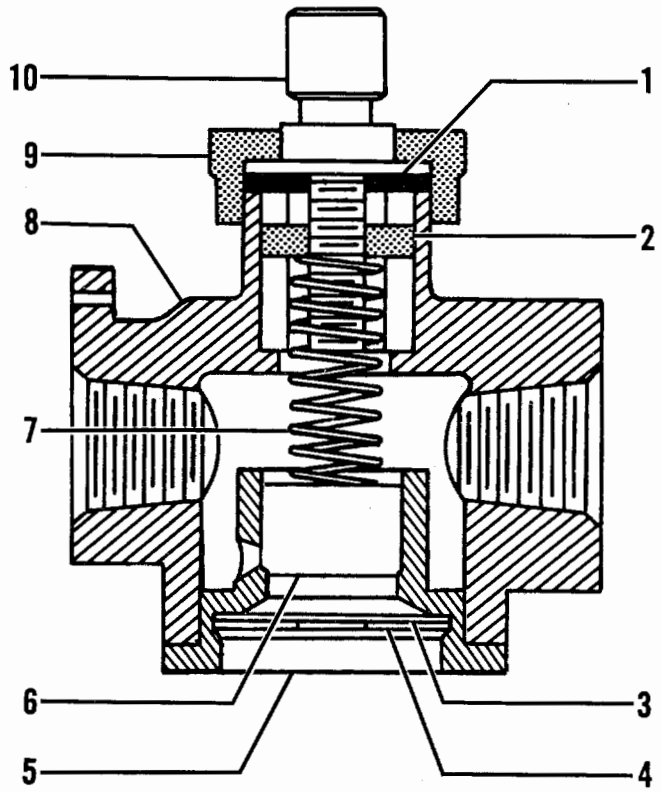

Figure 49G. Vacuum Relief Valve (TD-1 thru TD-452)

FIG. & INDEX NO.	PART NO.	DESCRIPTION 1 2 3 4 5 6 7	UNITS PER ASSY	USABLE ON CODE
49G-	32-436	VALVE,VACUUM RELIEF /SEE FIG. 49 FOR NHA/	2	1
- 1	32-425-7	GASKET	1	1
- 2	32-425-4	NUT,ADJUSTING	1	1
- 3	32-425-10	SCREEN	1	1
- 4	32-425-8	RETAINER,SCREEN	1	1
- 5	32-436-2	SEAT,VALVE	1	1
- 6	32-436-3	PISTON	1	1
- 7	32-436-9	SPRING	1	1
- 8	32-436-1	BODY	1	1
- 9	32-425-5	NUT,LOCK	1	1
- 10	32-425-6	SCREW,ADJUSTMENT	1	1

CODE EFFECTIVITY

1 TD-1 THRU TD-452

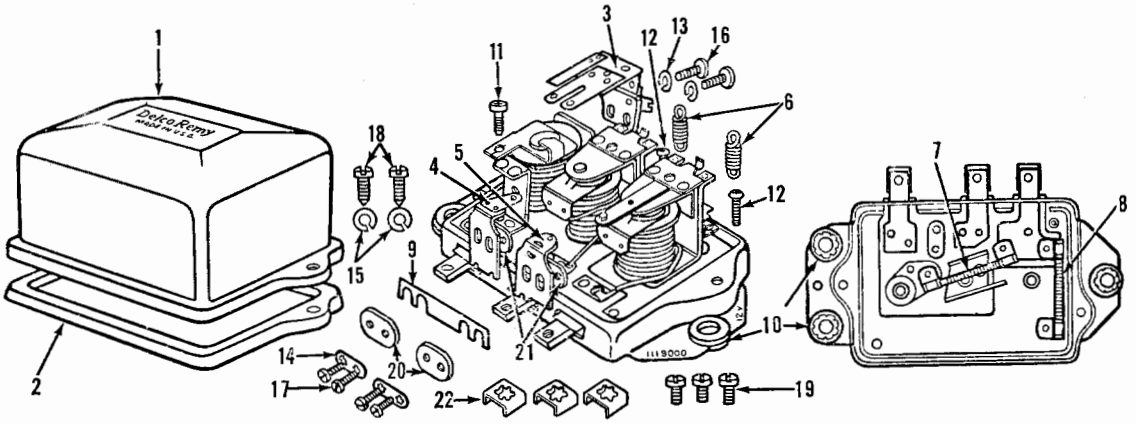

Figure 49H. Voltage Regulator

FIG. & INDEX NO.	PART NO.	DESCRIPTION 1 2 3 4 5 6 7	UNITS PER ASSY	USABLE ON CODE
49H-	1119144	VOLTAGE REGULATOR,15 AMP /SEE FIG. 49 FOR NHA/.	2	1
	1118976	VOLTAGE REGULATOR,25 AMP /SEE FIG. 49 & 49C . . FOR NHA/	2	2
- 1	1931886	. COVER	1	1
	1933101	. COVER	1	2
- 2	1931887	. GASKET,COVER.	1	1
	1933104	. GASKET,COVER.	1	2
- 3	1878467	. ARMATURE,RELAY.	1	
- 4	1878517	. CONTACT,CURRENT REGULATOR	1	1
	1878493	. CONTACT,CURRENT REGULATOR	1	2
- 5	1933239	. CONTACT,VOLTAGE REGULATOR	1	1
	1878493	. CONTACT,VOLTAGE REGULATOR	1	2
- 6	1912176	. SPRING.	2	
- 7	1910180	. RESISTOR,375 OHMS	1	2
- 8	1910179	. RESISTOR,300 OHMS	1	
- 9	1878504	. CONNECTOR	1	2
- 10	1879663	. GROMMET	3	
- 11	1912159	. SCREW,ADJUSTMENT.	1	
- 12	1922408	. SCREW,ADJUSTMENT.	1	
- 13	1904377	. LOCK WASHER,RELAY ARMATURE SCREW.	2	
- 14	1878505	. LOCK WASHER,CONTACT ATTACHING SCREW	2	
- 15	1938522	. LOCK WASHER,COVER SCREW	3	2
- 16	1924764	. SCREW,RELAY ARMATURE ATTACHING.	2	
- 17	1878516	. SCREW,CONTACT ATTACHING	4	
- 18	1943385	. SCREW,COVER	3	1
	1878499	. SCREW,COVER	3	2
- 19	1878502	. SCREW,TERMINAL.	3	

FIG. & INDEX NO.	PART NO.	1 2 3 4 5 6 7 DESCRIPTION	UNITS PER ASSY	USABLE ON CODE
49H- 20	1922599	• WASHER,INSULATING • • • • • • • • • • • • • • • •	2	
- 21	1878507	• WASHER,INSULATING • • • • • • • • • • • • • • • •	2	
- 22	1878503	• CLAMP,TERMINAL• • • • • • • • • • • • • • • • • •	3	

CODE	EFFECTIVITY	CODE	EFFECTIVITY
1	TD-1 THRU TD-202	2	TD-203 AND AFTER

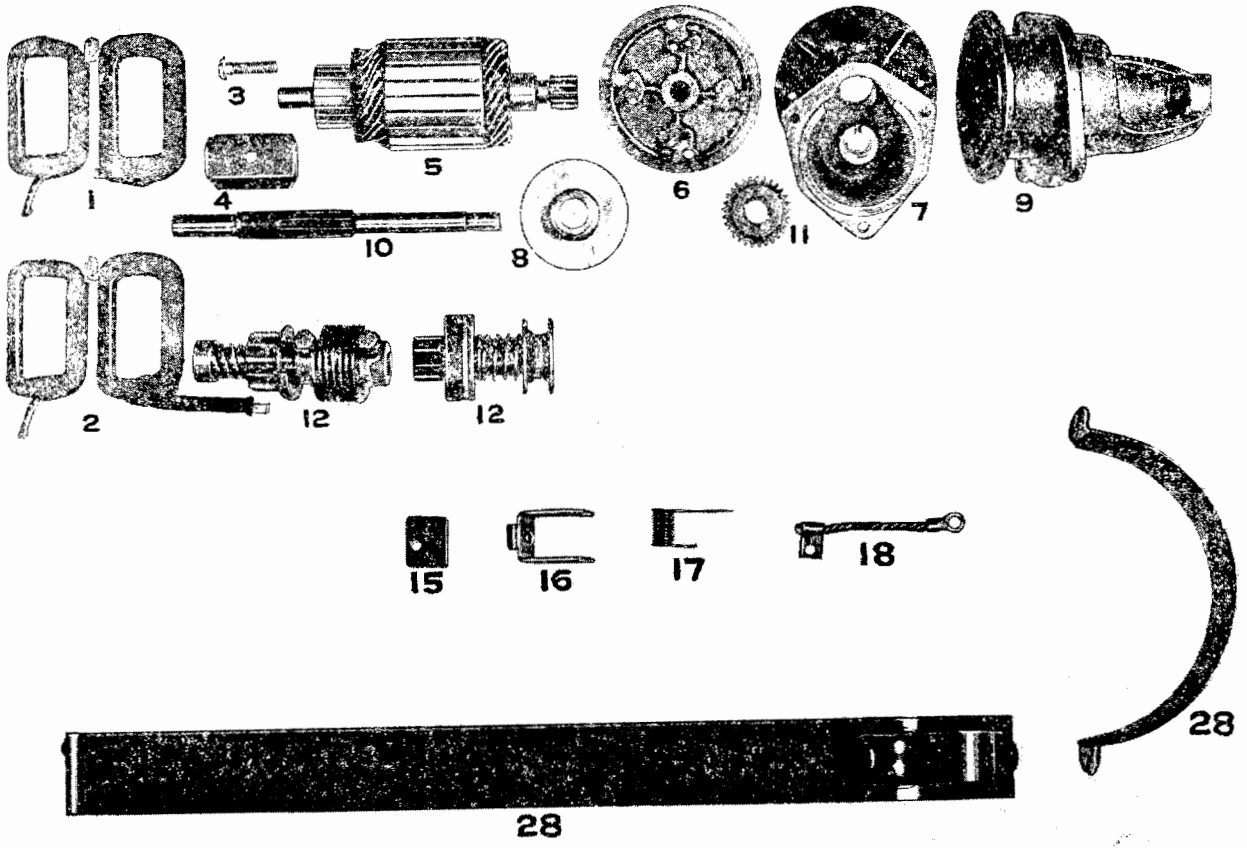

Figure 49L Starter

FIG. & INDEX NO.	PART NO.	DESCRIPTION 1 2 3 4 5 6 7	UNITS PER ASSY	USABLE ON CODE
49I-	1109687	STARTER /SEE FIG. 49 & 49C FOR NHA/	2	
-1,2	1910862	FIELD COIL ASSY,COMPLETE /4 COILS/	1	
- 3	1881865	STUD,FIELD TERMINAL	1	
- 4	1881870	SHOE,POLE	1	
- 5	1939405	ARMATURE	1	
- 6	1938736	END FRAME,COMMUTATOR	1	
- 7	1938732	HOUSING,GEAR	1	
- 8	1938737	PLATE,CENTER BEARING OR COVER	1	
- 9	1948704	HOUSING,MOTOR DRIVE	1	
- 10	1938731	SUB SHAFT	1	
- 11	1938741	GEAR,REDUCTION	1	
- 12	1938637	DRIVE,MOTOR	1	
- 15	1885058	BRUSH	2	
- 16	1810226	HOLDER,BRUSH	2	
- 17	1881835	SPRING,BRUSH	2	
- 18	1930694	LEAD,BRUSH GROUND	2	
- 28	1881843	BAND,COMMUTATOR COVER	1	

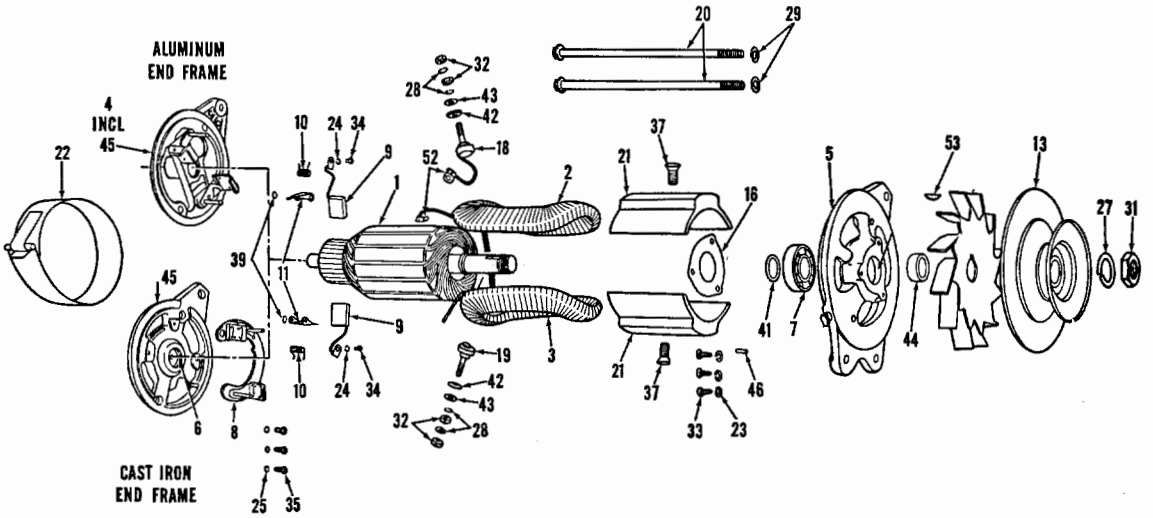

Figure 49J. Generator

FIG. & INDEX NO.	PART NO.	DESCRIPTION 1 2 3 4 5 6 7	UNITS PER ASSY	USABLE ON CODE
49J-	1101901	GENERATOR,15 AMP /SEE FIG. 49 FOR NHA/.	2	1
	1101905	GENERATOR,25 AMP /SEE FIG. 49 & 49C FOR NHA/. .	2	2
	1105052	GENERATOR,40 AMP /SEE FIG. 49 & 49C FOR NHA/. .	2	2
- 1	1928648	. ARMATURE,15 AMP	1	1
	1930314	. ARMATURE,25 AMP	1	2
	1945105	. ARMATURE,40 AMP	1	2
- 2	1917288	. FIELD COIL SET,15 AMP RH & LH	1	1
	1929703	. FIELD COIL SET,25 AMP RH & LH	1	2
	1945098	. FIELD COIL,40 AMP RH.	1	2
- 3	1945099	. FIELD COIL,40 AMP LH.	1	2
- 4	1908839	. FRAME,COMMUTATOR END /15 & 25 AMP/.	1	
	1945109	. FRAME,COMMUTATOR END /40 AMP/	1	2
- 5	1925832	. FRAME,DRIVE END /15 & 25 AMP/	1	
	1945101	. FRAME,DRIVE END /40 AMP/.	1	2
- 6	954162	. BALL BEARING,COMMUTATOR END /15 & 25 AMP/ . .	1	
	900529	. BALL BEARING,COMMUTATOR END /40 AMP/.	1	2
- 7	954143	. BALL BEARING,DRIVE END /15 & 25 AMP/.	1	
	900529	. BALL BEARING,DRIVE END /40 AMP/	1	2
- 8	1908999	. PLATE,BRUSH /15 & 25 AMP/	1	
- 9	1906984	. BRUSH /15 & 25 AMP/	2	
	1906974	. BRUSH /40 AMP/.	2	2
- 10	1903720	. SPRING,BRUSH.	2	
- 11	1850759	. ARM,BRUSH /15 & 25 AMP/	2	
	1878183	. ARM,BRUSH /40 AMP/.	2	2
- 13	1908843	. PULLEY.	1	
- 16	1927844	. PLATE,BEARING RETAINER.	1	
- 18	1909159	. STUD & LEAD,TERMINAL /15 AMP/	1	1
	1914186	. STUD & LEAD,TERMINAL /25 & 40 AMP/.	1	2

FIG. & INDEX NO.	PART NO.	DESCRIPTION 1 2 3 4 5 6 7	UNITS PER ASSY	USABLE ON CODE
49J- 19	1858751	STUD,TERMINAL /15 & 25 AMP/	1	
	1910359	STUD,TERMINAL /40 AMP/	1	2
- 20	1908680	BOLT,THRU /15 AMP/	2	1
	1886685	BOLT,THRU /25 & 40 AMP/	2	2
- 21	1914618	SHOE,POLE /15 AMP/	2	1
	1911961	SHOE,POLE /25 AMP/	2	2
	1918004	SHOE,POLE /40 AMP/	2	2
- 22	1910131	BAND,COVER /15 & 25 AMP/	1	
	1945106	BAND,COVER /40 AMP/	1	2
- 23	1880781	LOCK WASHER,BALL BEARING PLATE SCREW	3	
- 24	1904377	LOCK WASHER,BRUSH LEAD SCREW	2	
- 25	121841	LOCK WASHER,BRUSH PLATE SCREW /15 & 25 AMP/	3	
- 27	1888439	LOCK WASHER,SHAFT NUT /40 AMP/	1	2
- 28	1904661	LOCK WASHER,TERMINAL STUD	4	
- 29	120638	LOCK WASHER,THRU BOLT	2	
- 31	1935548	NUT,SHAFT	1	
- 32	121743	NUT,TERMINAL	4	
- 33	5017850	SCREW,BALL BEARING RETAINER PLATE	3	
- 34	132688	SCREW,BRUSH LEAD ATTACHING	2	
- 35	1886496	SCREW,BRUSH PLATE ATTACHING /15 & 25 AMP/	3	
- 37	1843646	SCREW,POLE SHOE /15 & 25 AMP/	2	
	1883864	SCREW,POLE SHOE /40 AMP/	2	2
- 39	1857412	WASHER,BRUSH ARM SPACE	2	
- 41	809945	WASHER,INSIDE SPACE	1	
- 42	1902746	WASHER,TERMINAL STUD INSULATION /15 AMP/	2	1
	1858753	WASHER,TERMINAL STUD INSULATION /25 & 40 AMP/	2	2
- 43	1881409	WASHER,TERMINAL STUD PLAIN	2	
- 44	1861591	COLLAR,OUTSIDE SPACE /15 & 25 AMP/	1	
	1914198	COLLAR,OUTSIDE SPACE /40 AMP/	1	2
- 45	1886684	PIN,DOWEL /15 & 25 AMP/	1	
- 46	1886684	PIN,DOWEL /15 & 25 AMP/	1	
- 52	200242	TERMINAL CLIP,TO BRUSH LH /15 & 25 AMP/	2	
	455613	TERMINAL CLIP,TO BRUSH RH /15 & 25 AMP/	2	
	200362	TERMINAL CLIP,TO BRUSH /40 AMP/	4	
- 53	124545	KEY,WOODRUFF	1	

CODE	EFFECTIVITY	CODE	EFFECTIVITY
1	TD-1 THRU TD-202	2	TD-203 AND AFTER

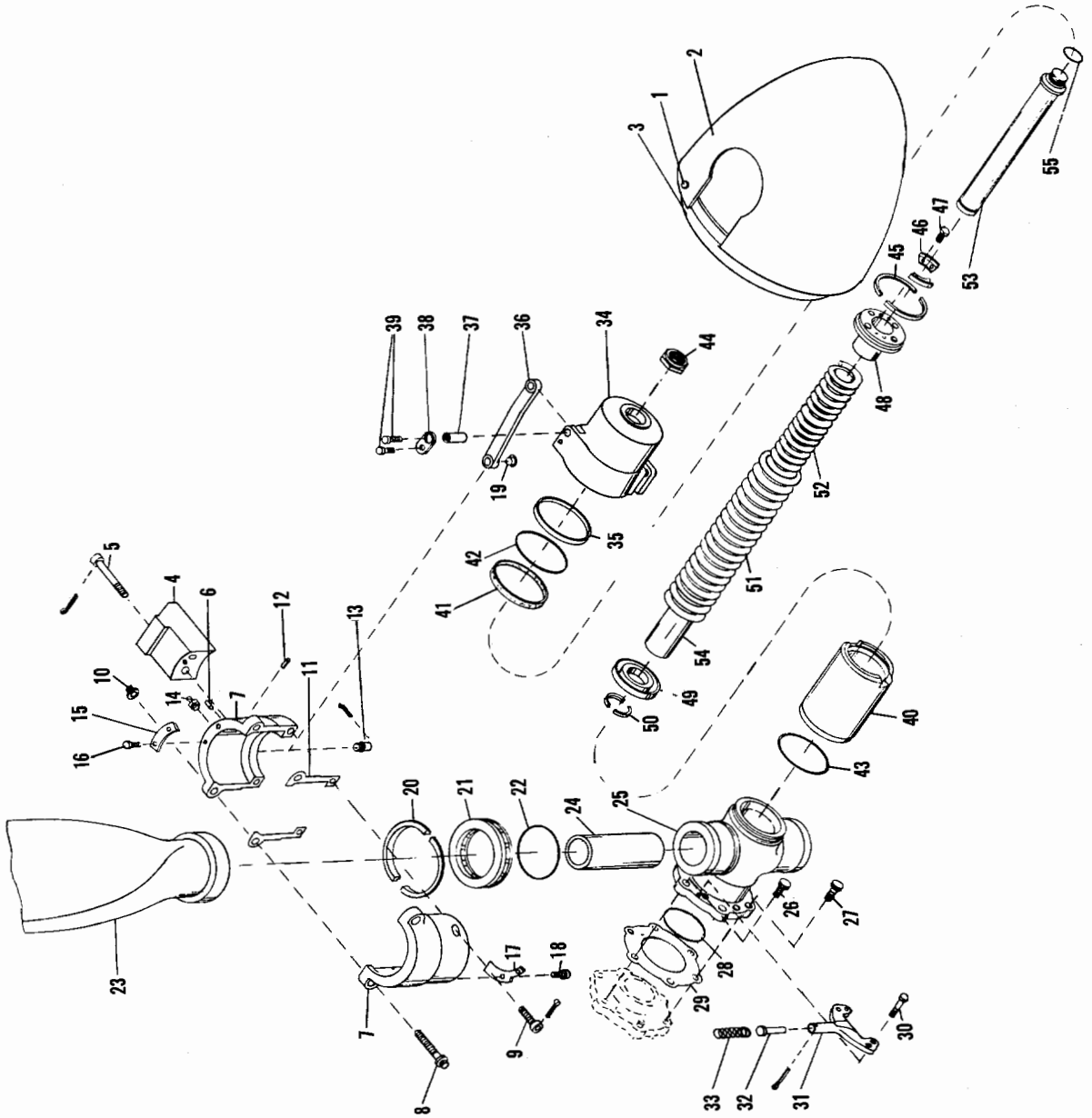

Figure 49K. Propeller

FIG. & INDEX NO.	PART NO.	DESCRIPTION 1 2 3 4 5 6 7	UNITS PER ASSY	USABLE ON CODE
49K-	HC-92ZK-2B/ 8447-12A	PROPELLER ASSY /SEE FIG. 49 & 49C FOR NHA/	2	
	95-960006-603	PROPELLER ASSY /WITH ANTI-ICER SHOES/	2	
	835-16	SPINNER ASSY,UNPOLISHED	1	
	835-6	SPINNER ASSY,POLISHED	1	
		/ATTACHING PARTS/		
- 1	AN526-C1032-R8	SCREW	14	
		----*----		
- 2	C-888-4	DOME	1	
- 3	C-885	ADAPTER RING	1	
	838-30	CLAMP & COUNTERWEIGHT ASSY	2	
- 4	833-7	COUNTERWEIGHT	1	
		/ATTACHING PARTS/		
- 5	7/16-20X3	SCREW,SOCKET HEAD	2	
	AN380-3-2	COTTER PIN	2	
		----*----		
- 6	A-65	PIN,STAKING	1	
- 7	C-1301	CLAMP	2	
		/ATTACHING PARTS/		
- 8	7/16-20X2 1/8	SCREW,FERRY	2	
- 9	A-282	SCREW,SOCKET HEAD	2	
	AN380-3-2	COTTER PIN	2	
- 10	AN363-720HT	NUT	2	
		----*----		
- 11	A-1306	GASKET,CLAMP	2	
- 12	A-285	PIN,STAKING	1	
- 13	A-304	SCREW,LINK	1	
- 14	5010	FITTING,ZERK	1	
- 15	A-1305	WEIGHT,BALANCE	AR	
		/ATTACHING PARTS/		
- 16	AN501-A10-6	SCREW	2	
		----*----		
- 17	A-881	PLATE,HIGH PITCH STOP	2	
		/ATTACHING PARTS/		
- 18	AN501-A10-65	SCREW	2	
		----*----		
- 19	A-944	SLEEVE,LINK SCREW	2	
	AN380-3-3	COTTER PIN,SLEEVE	2	
- 20	A-1331	SPLIT RING	4	
- 21	A-1303A	BEARING,BLADE	2	
- 22	PRP-909-6	O RING,BLADE SEAL	2	
- 23	8447-12A	BLADE	2	
	37572	SHOE,ALCOHOL ANTI-ICER	2	
	840-46	SPIDER UNIT,HUB	1	
- 24	A-1308	TUBE,PILOT	2	
- 25	C-1314	SPIDER,HUB	1	
		/ATTACHING PARTS/		
- 26	A-1333	BOLT,HEX HEAD	2	
- 27	A-1328	SCREW	4	
		----*----		
- 28	PRP-902-32	O RING,HUB SPIDER	1	
- 29	B-1322	SHIM	1	
	830-9	STOP ASSY,AUTOMATIC HIGH PITCH	1	
		/ATTACHING PARTS/		
- 30	AN4-H-5A	BOLT	4	
		----*----		
- 31	B-984	BRACKET	1	
- 32	A-883	PIN	1	
	AN380-3-3	COTTER PIN	1	
- 33	A-884	SPRING	1	
	832-24	PISTON ASSY	1	
	C-852-6	PISTON UNIT	1	
- 34	C-852-1	PISTON	1	
- 35	A-862	BUSHING	1	
- 36	A-861-3	ARM,LINK	2	
		/ATTACHING PARTS/		
- 37	A-872	PIN	1	
		----*----		

FIG. & INDEX NO.	PART NO.	DESCRIPTION 1 2 3 4 5 6 7	UNITS PER ASSY	USABLE ON CODE
49K- 38	A-1464	. . LINK PIN.	2	
		/ATTACHING PARTS/		
- 39	AN501-A10-6	. . SCREW	2	
		----*----		
- 40	B-854	. . CYLINDER.	1	
- 41	A-863	. . DUST SEAL,FELT.	1	
- 42	PRP-902-46	. . O RING,PISTON SEAL.	1	
- 43	PRP-914-12	. . O RING,CYLINDER	1	
- 44	A-880-2	. . NUT,FLEXLOCK.	1	
- 45	A-859	. . SPLIT RING,FRONT.	2	
- 46	A-899	. . STOP,FEATHERING	2	
		/ATTACHING PARTS/		
- 47	AN501-A10-6	. . SCREW	2	
		----*----		
	831-5A	. SPRING ASSY,FEATHERING.	1	
- 48	A-856	. . MUSHROOM,OUTER.	1	
- 49	A-857	. . RETAINER,REAR SPRING.	1	
- 50	A-858	. . SPLIT RETAINER,REAR SPRING.	2	
- 51	B-853	. . FEATHERING SPRING,OUTER	1	
- 52	B-953	. . FEATHERING SPRING,INNER	1	
- 53	B-855A	. . PILOT TUBE,FEATHERING SPRING.	1	
- 54	A-860-1	. . TUBE,SPACER	1	
- 55	PRP-914-12	. . O RING,PILOT TUBE SEAL.	1	

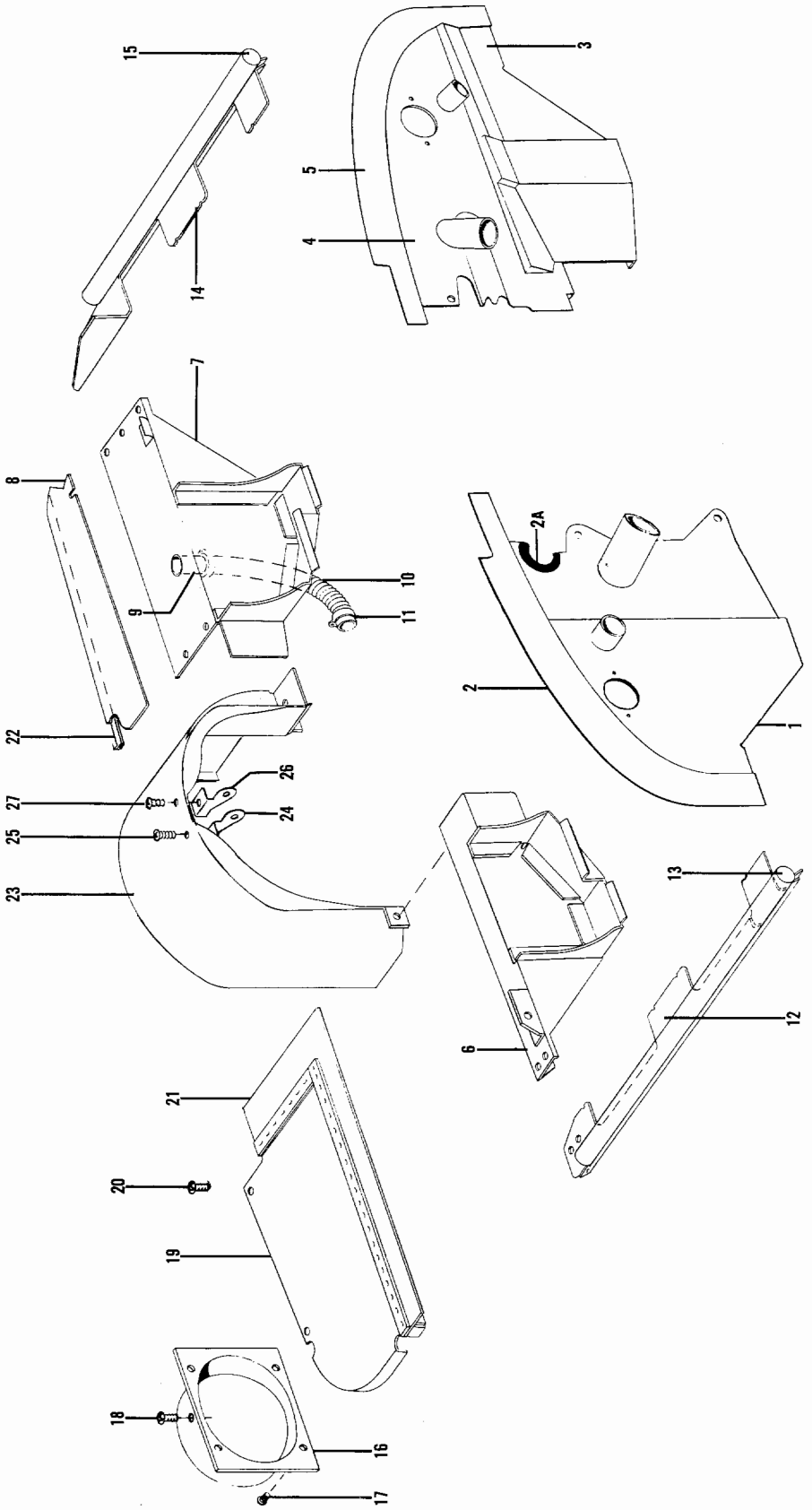

Figure 50. Engine Baffles

FIG. & INDEX NO.	PART NO.	DESCRIPTION 1 2 3 4 5 6 7	UNITS PER ASSY	USABLE ON CODE
50 -	95-910015	BAFFLE INSTL /SEE FIG. 49 FOR NHA/.	NP	1
	95-910015-329	BAFFLE INSTL /SEE FIG. 49C FOR NHA/	NP	2
- 1	¤95-910015-27	. BAFFLE ASSY,LH ENGINE	1	3
	95-910015-269	. BAFFLE ASSY,LH ENGINE	1	4
	95-910015-287	. BAFFLE ASSY,LH & RH ENGINE.	1	5
	95-910015-317	. BAFFLE ASSY,LH ENGINE	1	2
	¤95-910015-229	. BAFFLE ASSY,RH ENGINE	1	6
	95-910015-319	. BAFFLE ASSY,RH ENGINE	1	9
	95-910015-317	. BAFFLE ASSY,RH ENGINE	1	10
- 2	¤95-910015-29	. . SEAL.	1	
- 2A	¤95-910015-209	. . SEAL.	1	
- 3	95-910015-1	. BAFFLE ASSY,LOWER LH & RH ENGINE.	1	6
	95-910015-301	. BAFFLE ASSY,LOWER LH & RH ENGINE.	1	7
- 4	95-910015-7	. BAFFLE ASSY,LH ENGINE	1	3
	95-910015-275	. BAFFLE ASSY,LH ENGINE	1	4
	95-910015-295	. BAFFLE ASSY,LH ENGINE	1	5
	95-910015-305	. BAFFLE ASSY,LH ENGINE	1	2
	95-910015-237	. BAFFLE ASSY,RH ENGINE	1	3
	95-910015-263	. BAFFLE ASSY,RH ENGINE	1	4
	95-910015-295	. BAFFLE ASSY,RH ENGINE	1	5
	95-910015-307	. BAFFLE ASSY,RH ENGINE	1	11
	95-910015-305	. BAFFLE ASSY,RH ENGINE	1	12
	95-910015-335	. BAFFLE ASSY,RH /BOTH ENGINES/	1	13
- 5	¤95-910015-17	. . SEAL.	1	
- 6	¤95-910015-63	. BAFFLE ASSY,ENGINE.	1	
- 7	¤95-910015-257	. BAFFLE ASSY,ENGINE.	1	
- 8	95-910015-113	. SEAL.	1	
- 9	95-910015-61	. TUBE,GENERATOR BLAST.	1	
- 10	111716AX2XX26	. DUCT,GENERATOR BLAST /SUPERCEDES. 95-910015-51/	1	1
	111716AX2XX30	. DUCT,GENERATOR & ALTERNATOR BLAST	1	2
- 11	AN737	. CLAMP	1	
- 12	¤95-910015-173	. BAFFLE ASSY,ENGINE.	1	
- 13	¤95-910015-171	. . SEAL.	1	
- 14	¤95-910015-185	. BAFFLE ASSY,ENGINE.	1	
- 15	¤95-910015-183	. . SEAL.	1	
- 16	95-910015-203	. DUCT ASSY,ENGINE BAFFLE . . . . . /ATTACHING PARTS/	1	
- 17	¤AN515-8R	. SCREW	10	
- 18	AN525-8R	. SCREW	3	
	¤AN960-8	. WASHER.	10	
	¤MS20365-832	. NUT /SUPERSEDES AN365-832/.	10	
- 19	¤95-910015-135	. BAFFLE ASSY,ENGINE. . . . . /ATTACHING PARTS/	1	
- 20	¤AN525-8R	. SCREW	4	
		----*----		
- 21	95-910015-127	. . SEAL.	1	
- 22	95-910015-197	. STRIP	1	
	95-910015-253	. SHROUD ASSY	1	
- 23	¤95-910015-155	. . SHROUD.	1	
- 24	¤95-910015-159	. . CLIP,SHROUD . . . . . /ATTACHING PARTS/	1	
- 25	¤AN515-8R	. . SCREW	1	
	AN960D8	. . WASHER.	1	
		----*----		
- 26	¤95-910015-160	. . CLIP,SHROUD . . . . . /ATTACHING PARTS/	1	
- 27	¤AN515-8R	. . SCREW	1	
	AN960D8	. . WASHER.	1	
		----*----		

CODE	EFFECTIVITY	CODE	EFFECTIVITY
1	TD-1 THRU TD-533	2	TD-534 AND AFTER
3	TD-1 THRU TD-452	4	TD-453 THRU TD-498
5	TD-499 THRU TD-533	6	TD-1 THRU TD-498
7	TD-499 AND AFTER	8	DELETED
9	TD-499 THRU TD-577	10	TD-578 AND AFTER
11	TD-534 THRU TD-577	12	TD-578 THRU TD-707
13	TD-708 AND AFTER		

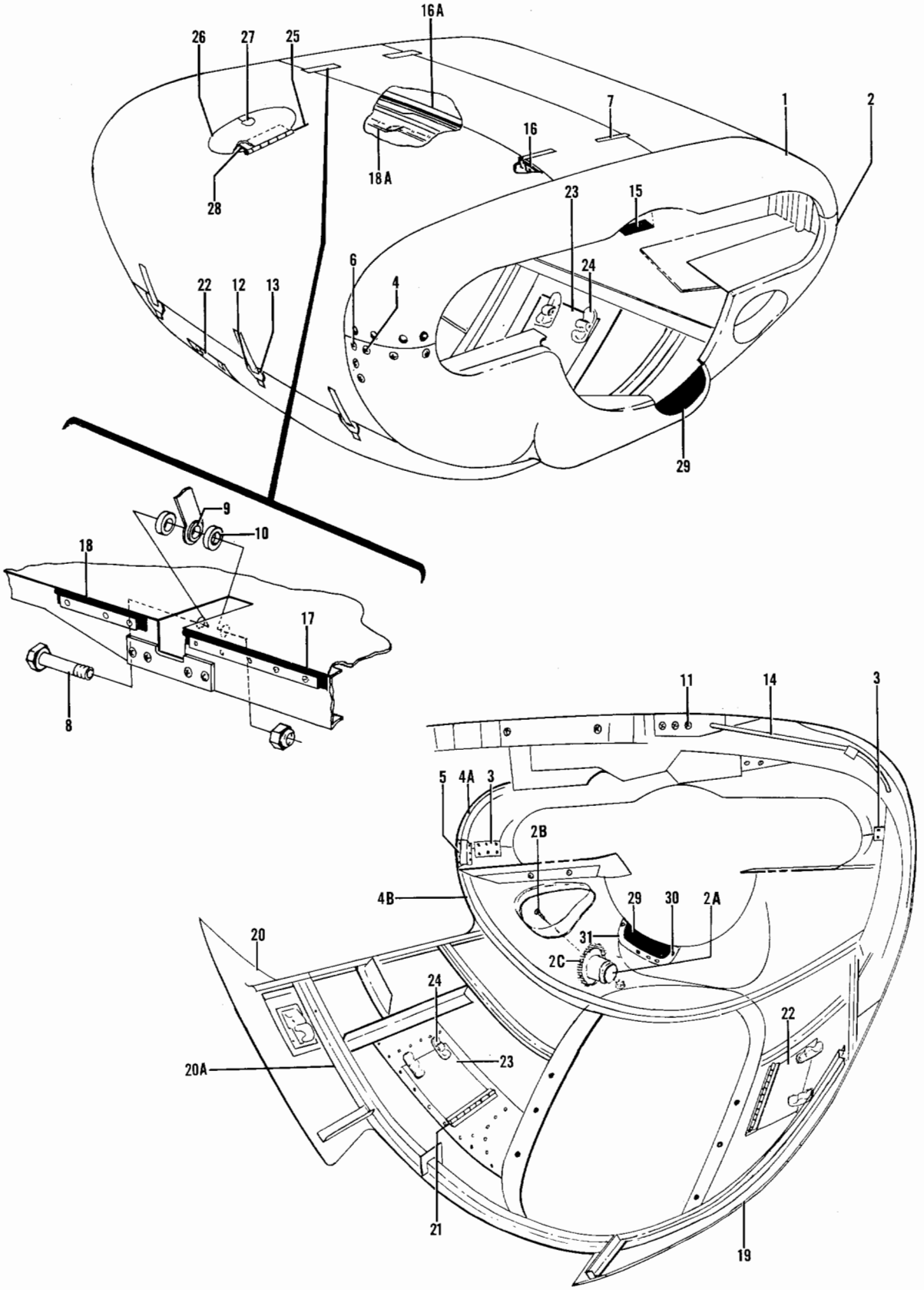

Figure 51. Engine Cowling

FIG. & INDEX NO.	PART NO.	DESCRIPTION 1 2 3 4 5 6 7	UNITS PER ASSY	USABLE ON CODE
51	95-910011-101	COWLING INSTL,ENGINE LH	NP	1
	95-910011-505	COWLING INSTL,FUEL INJECTION ENGINE LH.	NP	2
	95-910011-513	COWLING INSTL,FUEL INJECTION ENGINE LH.	NP	3
	95-910011-102	COWLING INSTL,ENGINE RH	NP	1
	95-910011-506	COWLING INSTL,FUEL INJECTION ENGINE RH.	NP	2
	95-910011-514	COWLING INSTL,FUEL INJECTION ENGINE RH.	NP	3
-	95-910011-601	. COWLING ASSY,ENGINE LH.	1	
	95-910011-602	. COWLING ASSY,ENGINE RH.	1	
		/ATTACHING PARTS/		
	AN520C10R	. SCREW	12	
		----*----		
	95-910011-608	. . NOSE ASSY,ENGINE COWLING LH	1	
	95-910011-609	. . NOSE ASSY,ENGINE COWLING RH	1	
- 1	¤95-910011-657	. . . NOSE ASSY,COWLING UPPER	1	
		/SUPERSEDES 95-910011-607/		
- 2	95-910011-515	. . . NOSE ASSY,COWLING LOWER	1	
		/SUPERSEDES 95-910011-157,-485 & -503/		
	95-910011-511	. . . . NOSE,COWLING LOWER.	1	
- 2A	¤95-910011-497	. . . . TUBE ASSY,THROTTLE BODY RAM AIR	1	
		/ATTACHING PARTS/		
- 2B	AN525-10R	. . . . SCREW	4	
	¤AN960-10	. . . . WASHER.	4	
	¤MS20365-1032	. . . . NUT	4	
		----*----		
- 2C	¤95-910011-507	. . . . SCREEN,THROTTLE BODY RAM AIR TUBE . . .	1	
- 3	¤95-910011-203	. . . SPLICE,COWLING NOSE LH.	1	
	¤95-910011-204	. . . SPLICE,COWLING NOSE RH.	1	
		/ATTACHING PARTS/		
	AN525-8	. . . SCREW	5	4
- 4	AN507-832	. . . SCREW	5	5
	¤MS20365-832	. . . NUT /SUPERSEDES AN365-832/.	5	
		----*----		
- 4A	95-910011-151	. . . RING,UPPER.	1	
- 4B	95-910011-149	. . . RING,LOWER.	1	
- 5	95-910011-153	. . . SPLICE,COWLING LH	1	
	¤95-910011-154	. . . SPLICE,COWLING RH	1	
		/ATTACHING PARTS/		
	AN525-8	. . . SCREW	5	4
- 6	AN507-832	. . . SCREW	5	5
	¤MS20365-832	. . NUT /SUPERSEDES AN365-832/.	5	
		. . NUT /SUPERSEDES AN365-832/.		
		----*----		
	¤50-910148-71	. . HINGE,COWLING UPPER DOOR.	4	7
		/ATTACHING PARTS/		
	¤AN4-11A/M/	. . BOLT.	4	
	¤MS20365-428	. . SCREW /SUPERSEDES AN365-428/.	4	
	¤100951X050ZZ	. . WASHER.	4	
	¤45-910163-3	. . SPACER.	4	
	¤45-910186-3	. . BUSHING	4	
	¤45-910162-3	. . BUSHING	4	
		----*----		
- 7	95-910011-391	. . HINGE,COWLING UPPER DOOR.	4	8
		/ATTACHING PARTS/		
- 8	¤AN4-11A/M/	. . BOLT.	1	
- 9	102933S5ZJ0625	. . SPACER.	2	
- 10	105090CR150-5E	. . SPACER.	2	
	¤AN960-516L	. . WASHER.	AR	
	¤MS20365-428	. . NUT /SUPERSEDES AN365-428/.	1	
		----*----		
	95-910011-605	. . DOOR ASSY,COWLING UPPER LH.	1	7
	¤95-910011-617	. . DOOR ASSY,COWLING UPPER LH.	1	8
	95-910011-606	. . DOOR ASSY,COWLING UPPER RH.	1	7
	¤95-910011-618	. . DOOR ASSY,COWLING UPPER RH.	1	8
		/ATTACHING PARTS/		
- 11	AN3	. . SCREW	6	
	¤MS20365-1032	. . NUT /SUPERSEDES AN365-1032/	6	
		----*----		

FIG. & INDEX NO.	PART NO.	DESCRIPTION 1 2 3 4 5 6 7	UNITS PER ASSY	USABLE ON CODE
51	414-184040-13	. . . LATCH INSTL,COWLING	3	
		/FOR COMPLETE BREAKDOWN SEE FIG. 8/		
	¤414-184040-1	. . . . LEVER ASSY,LATCH.	1	
- 12	¤414-184040-3	. . . . . LEVER,LATCH INSTL	1	
- 13	414-184040-5	. . . . . BAR,LATCH INSTL	1	
	95-910011-303	. . ROD,COWLING DOOR BRACE.	2	7
- 14	95-910011-399	. . ROD,COWLING DOOR BRACE LH	1	8
	95-910011-400	. . ROD,COWLING DOOR BRACE RH	1	8
		/ATTACHING PARTS/		
	¤MS24665-132	. . PIN,COTTER /SUPERSEDES AN380-2-2/	1	
		----*----		
- 15	95-910011-352	. . BUMPER,UPPER COWLING RUBBER	1	
- 16	111177-00216	. . SEAL,UPPER COWLING DOOR FRONT RUBBER. . . .	2	
	95-910011-133	. . CHANNEL,LH.	1	
- 16A	95-910011-134	. . CHANNEL,RH.	1	
- 17	111177-02600	. . SEAL,UPPER COWLING DOOR CENTER RUBBER . . .	2	
- 18	111177-00316	. . SEAL,UPPER COWLING DOOR REAR RUBBER	2	
	95-910011-131	. . ZEE,LH. 001002	1	
- 18A	95-910011-132	. . ZEE,RH.	1	
	¤95-910011-603	. . DOOR ASSY,COWLING LOWER LH.	1	
	¤95-910011-604	. . DOOR ASSY,COWLING LOWER RH.	1	9
	95-910011-145	. . . DOOR,COWLING LOWER LH	1	9
	95-910011-146	. . . DOOR,COWLING LOWER RH	1	9
		/ATTACHING PARTS/		
	¤98264-2-110	. . . STUD.	16	
	¤99785-2	. . . PIN	16	
	¤295846-1	. . . GROMMET	16	
		----*----		
	95-910011-371	. . SKIN,LH ENGINE COWLING LOWER INBD	1	10
	¤95-910011-372	. . SKIN,RH ENGINE COWLING LOWER INBD	1	10
	95-910011-373	. . SKIN,LH ENGINE COWLING LOWER OUTBD.	1	10
	¤95-910011-374	. . SKIN,RH ENGINE COWLING LOWER OUTBD.	1	10
- 19	¤95-910011-467	. . SKIN,LH ENGINE COWLING LOWER INBD	1	11
	95-910011-468	. . SKIN,RH ENGINE COWLING LOWER INBD	1	11
- 20	¤95-910011-465	. . SKIN,LH ENGINE COWLING LOWER OUTBD.	1	11
	95-910011-466	. . SKIN,RH ENGINE COWLING LOWER OUTBD.	1	11
	95-910011-381	. . DOOR ASSY,ENGINE LOWER COWLING LH	1	10
	95-910011-383	. . DOOR ASSY,ENGINE LOWER COWLING RH	1	10
		/ATTACHING PARTS/		
	¤105774C-ZE00212	. . PIN,HINGE	1	
		----*----		
	95-910011-457	. . . DOOR,ENGINE LOWER COWLING LH.	1	10
	95-910011-459	. . . DOOR,ENGINE LOWER COWLING RH.	1	10
	¤H5000-2-032-040	. . . LATCH ASSY,ENGINE LOWER COWLING DOOR. . .	1	10
	95-910011-483	. . DOOR ASSY,LH ENGINE LOWER COWLING INBD. . .	1	11
- 20A	¤95-910011-121	. . FORMER.	1	11
	¤95-910011-469	. . DOOR ASSY,RH ENGINE LOWER COWLING INBD. . .	1	11
	¤95-910011-469	. . DOOR ASSY,LH ENGINE LOWER COWLING OUTBD . .	1	11
		/ATTACHING PARTS/		
- 21	¤105774C-ZE00708	. . PIN,HINGE	1	
		----*----		
- 22	95-910011-479	. . . DOOR,LH ENGINE LOWER COWLING INBD	1	11
	¤95-910011-473	. . . DOOR,RH ENGINE LOWER COWLING INBD	1	11
- 23	¤95-910011-473	. . . DOOR,LH ENGINE LOWER COWLING OUTBD. . . .	1	11
- 24	H5000-040-051	. . . LATCH ASSY,ENGINE LOWER COWLING DOOR. . .	2	11
	¤95-910011-401	. . DOOR ASSY,ENGINE OIL LEVEL ACCESS	1	12
		/ATTACHING PARTS/		
- 25	¤105774C-ZE00212	. . PIN,HINGE	1	
		----*----		
- 26	95-910011-407	. . . DOOR,ENGINE OIL LEVEL ACCESS.	1	12
- 27	¤H5000-2-032-040	. . . LATCH ASSY,ENGINE OIL LEVEL ACCESS DOOR .	1	12
- 28	¤95-980019	. . PLACARD,OIL WEIGHT INSTRUCTIONS	1	12

FIG. & INDEX NO.	PART NO.	1 2 3 4 5 6 7 DESCRIPTION	UNITS PER ASSY	USABLE ON CODE
51 - 29	95-910011-345	. . SEAL,LOWER COWL NOSE CAP LIP RUBBER . . . . /ATTACHING PARTS/	1	
- 30	AN515-440	. . SCREW	5	
	¤MS20365-440	. . NUT /SUPERSEDES AN365-440/. . . . . ----*----	5	
- 31	95-910011-347	. . RETAINER,LOWER COWL NOSE CAP LIP SEAL . . .	1	

CODE	EFFECTIVITY	CODE	EFFECTIVITY
1	TD-1 THRU TD-452 EXCEPT TD-127 AND TD-444	2	TD-127,TD-444 AND TD-453 THRU TD-533
3	TD-534 AND AFTER	4	TD-1 THRU TD-86
5	TD-87 AND AFTER	6	DELETED
7	TD-1 THRU TD-116	8	TD-117 AND AFTER
9	TD-1 THRU TD-113	10	TD-114 THRU TD-173
11	TD-174 AND AFTER	12	TD-127, TD-135, TD-137 AND TD-174 AND AFTER

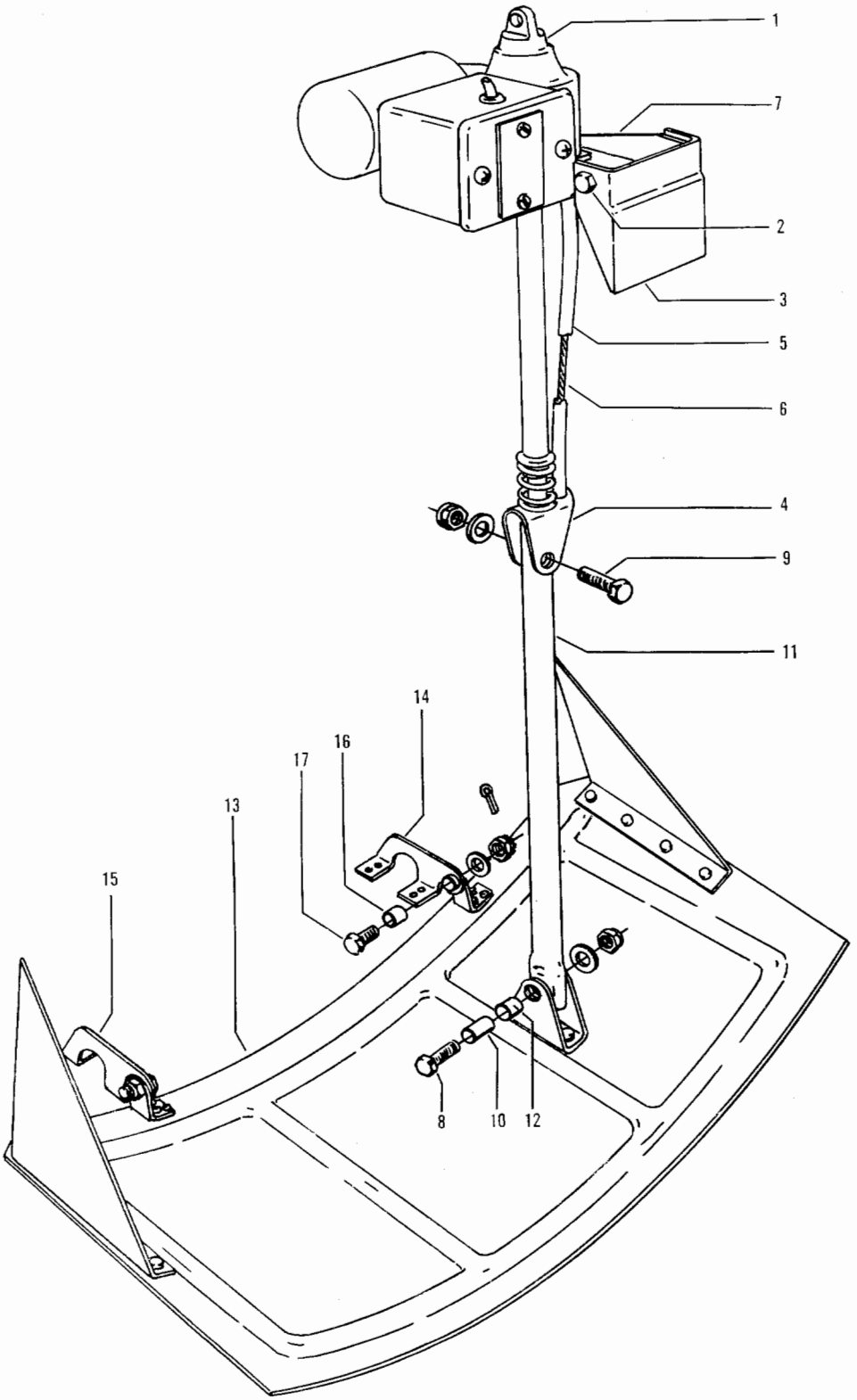

Figure 52. Electrical Cowl Flap

FIG. & INDEX NO.	PART NO.	DESCRIPTION 1 2 3 4 5 6 7	UNITS PER ASSY	USABLE ON CODE
		COWL FLAP INSTL,ELECTRICAL LH /STANDARD TD-1. . THRU TD-452 OPTIONAL TD-453 AND AFTER/		
		COWL FLAP INSTL,ELECTRICAL RH /STANDARD TD-1. . THRU TD-452 OPTIONAL TD-453 AND AFTER		
52	95-910016-601	. ACTUATOR ASSY,COWL FLAP LH. . . . . /SPARE ASSY,SEE SECTION 4 FOR COMPONENTS/	1	1
	95-910016-603	. ACTUATOR ASSY,COWL FLAP LH.	1	2
	95-910016-602	. ACTUATOR ASSY,COWL FLAP RH. . . . . /SPARE ASSY,SEE SECTION 4 FOR COMPONENTS/	1	1
	95-910016-604	. ACTUATOR ASSY,COWL FLAP RH.	1	2
- 1	95-369011-5	. ACTUATOR,COWL FLAP /SUPERCEDES 95-369011-1/ . /ATTACHING PARTS/	1	
- 2	AN3-30	. BOLT.	1	
	AN500A8-1	. SCREW	2	
	AN960-10	. WASHER.	1	
	AN365-1032	. NUT	1	
		----*----		
- 3	95-910016-63	. BRACKET,HINGE	1	
	95-910016-39	. STOP ASSY,COWL FLAP LH.	2	3
	95-910016-91	. STOP ASSY,COWL FLAP LH.	1	4
- 4	95-910016-43	. . STOP,COWL FLAP.	1	
- 5	95-910016-45	. . TUBE,COWL FLAP STOP	1	3
	95-910016-87	. . TUBE,COWL FLAP STOP	1	4
- 6	95-910016-47	. . CABLE,COWL FLAP STOP.	1	3
	95-910016-89	. . CABLE,COWL FLAP STOP.	1	4
- 7	95-910016-61	. . HINGE,HALF.	1	3
	95-910016-61	. . HINGE,HALF /LH ONLY/.	1	4
	95-910016-97	. STOP ASSY,COWL FLAP RH.	1	4
	95-910016-43	. . STOP,COWL FLAP.	1	4
	95-910016-87	. . TUBE,COWL FLAP STOP	1	4
	95-910016-89	. . CABLE,COWL FLAP STOP.	1	4
	95-910016-93	. . HINGE,COWL FLAP STOP RH	1	4
	95-910016-95	. . SPACER,COWL FLAP STOP RH.	1	4
	95-910016-53	. EXTENSION ASSY,COWL FLAP.	1	3
	95-910016-85	. EXTENSION ASSY,COWL FLAP. . . . . /ATTACHING PARTS/	1	4
- 8	AN520-10R	. SCREW	1	
- 9	AN3A	. BOLT.	1	
- 10	95-910016-59	. BUSHING	1	
	AN960-10	. WASHER.	2	
	AN365-1032	. NUT	1	
	AN365-1032	. NUT	1	
		----*----		
- 11	95-910016-55	. . EXTENSION,COWL FLAP	1	3
	95-910016-83	. . EXTENSION,COWL FLAP	1	4
- 12	95-910016-57	. . BUSHING,COWL FLAP	1	
- 13	95-910016-19	. DOOR ASSY,COWL FLAP LH /SEE FIG. 51 FOR NHA/.	1	
	95-910016-20	. DOOR ASSY,COWL FLAP RH /SEE FIG. 51 FOR NHA/.	1	
	95-910016-81	. . HINGE,COWL FLAP OUTBD LH.	1	
	95-910016-82	. . HINGE,COWL FLAP OUTBD RH.	1	
	35-910057-1	. . HINGE,COWL FLAP INBD LH	1	
	35-910057	. . HINGE,COWL FLAP INBD RH	1	
- 14	95-910016-77	. BRAZE ASSY,COWL FLAP LH	1	
	95-910016-78	. BRAZE ASSY,COWL FLAP RH	1	
- 15	95-910016-79	. BRAZE ASSY,COWL FLAP LH	1	
	95-910016-80	. BRAZE ASSY,COWL FLAP RH	1	
- 16	95-910016-75	. BUSHING,COWL FLAP	2	5
- 17	AN3	. BOLT.	2	5
	AN960-10	. WASHER.	2	5
	AN310-3	. NUT	2	
	AN380-2-2	. PIN,COTTER.	2	

CODE	EFFECTIVITY	CODE	EFFECTIVITY
1	TD-1 THRU TD-496	2	TD-497 AND AFTER
3	TD-1 THRU TD-222	4	TD-223 AND AFTER
5	TD-126 AND AFTER		

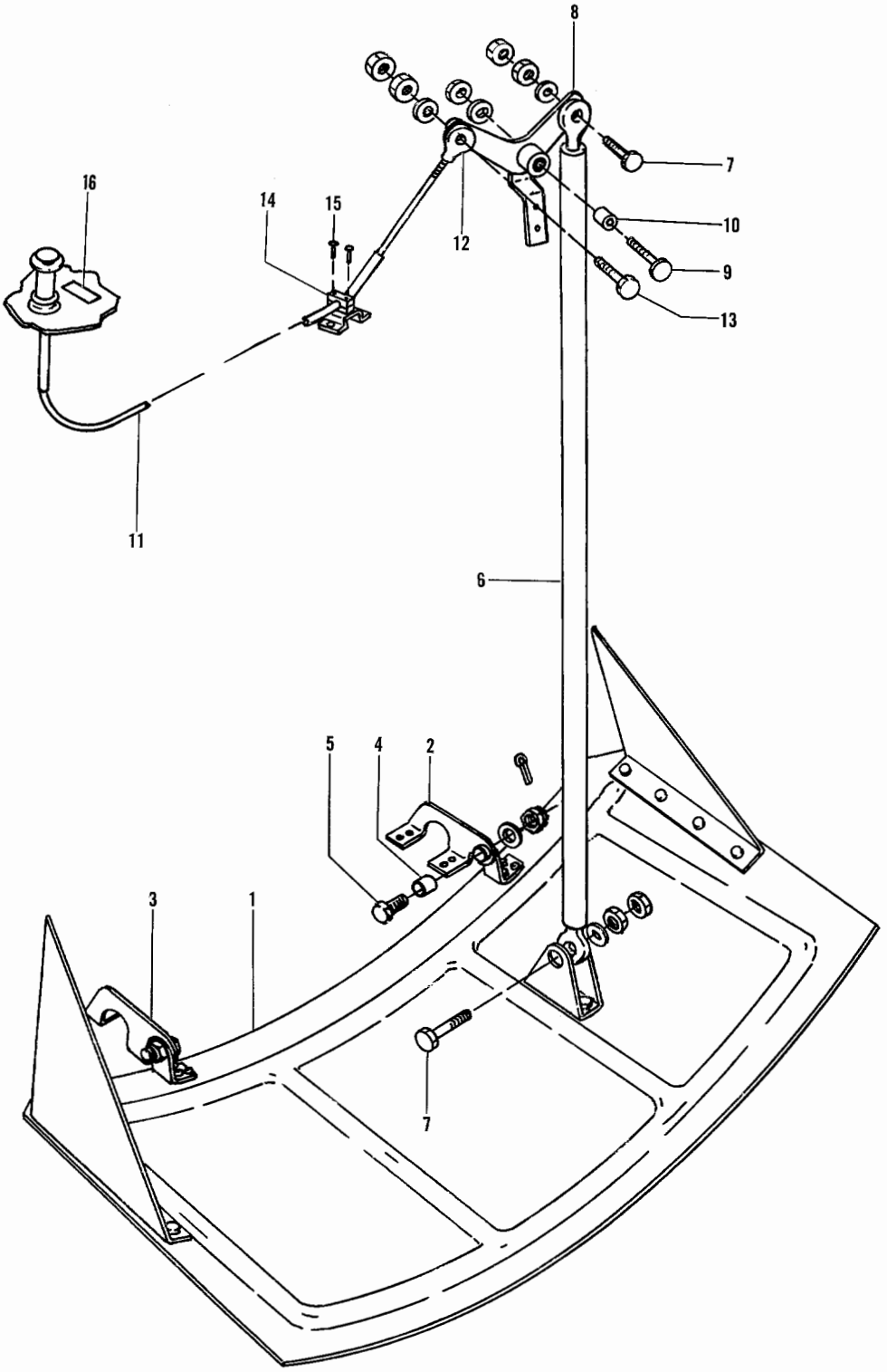

Figure 52A. Mechanical Cowl Flap

FIG. & INDEX NO.	PART NO.	DESCRIPTION 1 2 3 4 5 6 7	UNITS PER ASSY	USABLE ON CODE
52A-		COWL FLAP INSTL,MECHANICAL LH		1
		COWL FLAP INSTL,MECHANICAL RH		1
- 1	95-910016-19	DOOR ASSY,COWL FLAP LH	1	1
	95-910016-20	DOOR ASSY,COWL FLAP RH	1	1
	95-910016-81	HINGE,COWL FLAP OUTBD LH	1	1
	95-910016-82	HINGE,COWL FLAP OUTBD RH	1	1
	35-910057-1	HINGE,COWL FLAP INBD LH	1	1
	35-910057	HINGE,COWL FLAP INBD RH	1	1
- 2	95-910016-77	BRAZE ASSY,COWL FLAP LH	1	1
	95-910016-78	BRAZE ASSY,COWL FLAP RH	1	1
- 3	95-910016-79	BRAZE ASSY,COWL FLAP LH	1	1
	95-910016-80	BRAZE ASSY,COWL FLAP RH	1	1
- 4	95-910016-75	BUSHING,COWL FLAP	2	1
- 5	AN3	BOLT	2	1
	AN960-10	WASHER	2	1
	AN310-3	NUT	2	1
	AN380-2-2	PIN,COTTER	2	1
- 6	95-910025-9	EXTENSION,MECHANICAL COWL FLAP	1	1
		/ATTACHING PARTS/		
- 7	AN3	BOLT	2	
	AN960-10	WASHER	2	
	MS20365-1032	NUT	2	
	AN316-4R	NUT	2	
		----*----		
- 8	95-910025-13	BELLCRANK ASSY,MECHANICAL COWL FLAP	1	1
		/ATTACHING PARTS/		
- 9	AN3	BOLT	1	
	AN960-10	WASHER	1	
	MS20365-1032	NUT	1	
		----*----		
- 10	105739XZL0740	BUSHING,BELLCRANK BEARING	1	1
- 11	95-380005-1	CABLE ASSY,MECHANICAL COWL FLAP PUSH PULL	1	1
- 12	REB3N	END,CABLE ASSY ROD	1	1
		/ATTACHING PARTS/		
- 13	AN3	BOLT	1	
	AN960-10	WASHER	1	
	AN365-1032	NUT	1	
	AN316-4R	NUT	1	
		----*----		
- 14	35-944037	CLAMP,MECHANICAL COWL FLAP CONTROL BLOCK	2	1
		/ATTACHING PARTS/		
- 15	AN515-8R	SCREW	2	
	AN960-8	WASHER	2	
		----*----		
- 16	95-910026	PLACARD,COWL FLAP INSTRUCTION	1	1

CODE EFFECTIVITY

1 TD-453 AND AFTER

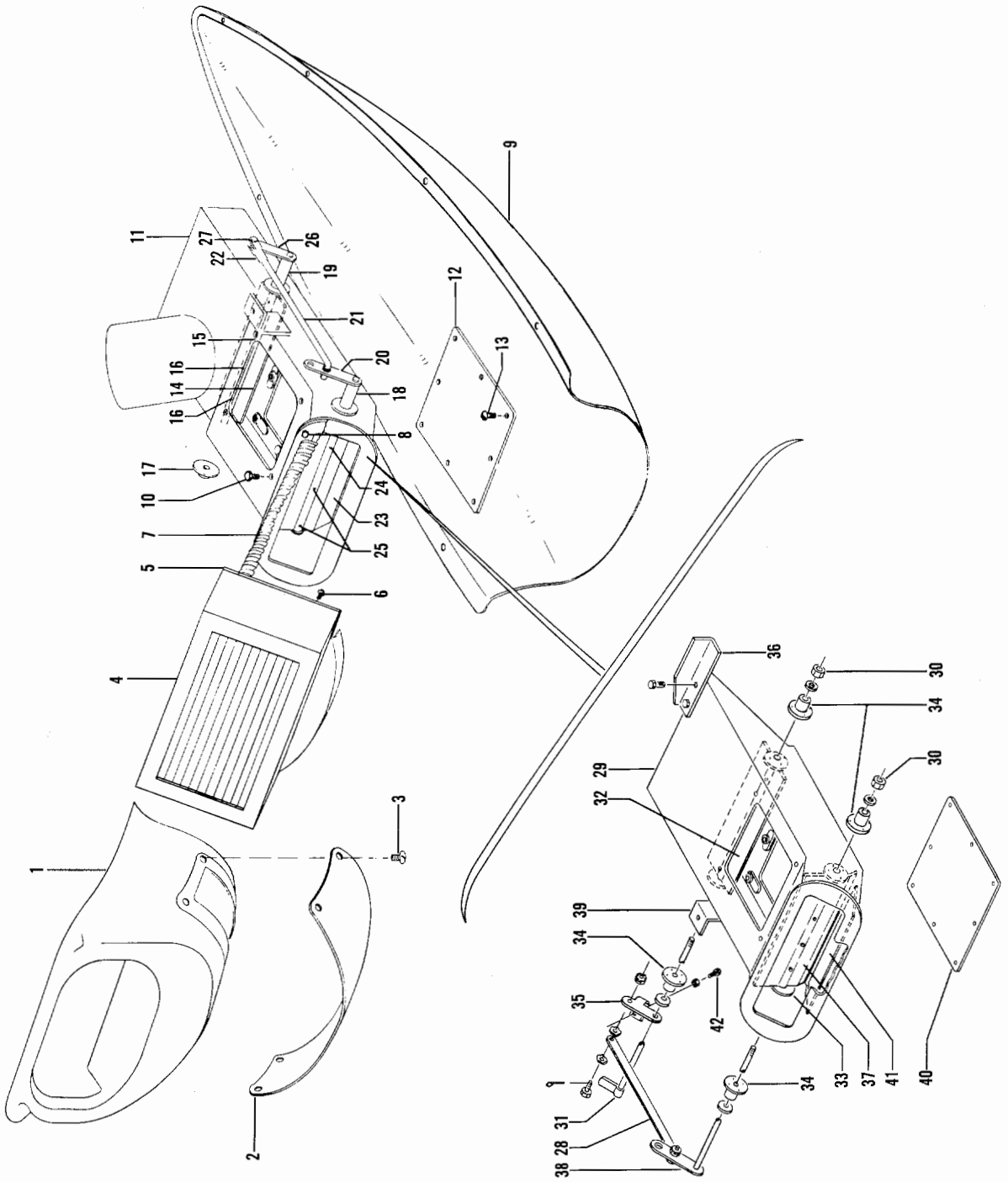

Figure 53. Induction Air (TD-1 thru TD-452, TD-534 & After)

FIG. & INDEX NO.	PART NO.	DESCRIPTION 1 2 3 4 5 6 7	UNITS PER ASSY	USABLE ON CODE
53		SYSTEM INSTL,INDUCTION /SEE FIG. 49 FOR NHA/. .		1
		SYSTEM INSTL,INDUCTION LH		2
		/SEE FIG. 49C FOR NHA/		
		SYSTEM INSTL,INDUCTION RH		2
		/SEE FIG. 49C FOR NHA/		
	95-919100-601	. SCOOP ASSY,AIR INDUCTION.	2	3
		/SPARE ASSY,SEE SECTION 4 FOR COMPONENTS/		
	95-919100-3	. HEAD ASSY,DUCT.	2	3
- 1	95-919100-5	. . DUCT,INDUCTION AIR.	1	3
- 2	95-919100-15	. . DOOR ASSY,INDUCTION AIR	1	3
		/ATTACHING PARTS/		
- 3	98265-1-.130	. . STUD.	4	
	98265-1-.150	. . STUD.	1	
	98265-2-.210	. . STUD.	1	
	99836	. . PIN,CROSS	6	
		----*----		
- 4	121128-1	. FILTER ASSY,AIR	2	3
- 5	95-919100-11	. PLATE,AIR INDUCTION	1	3
		/ATTACHING PARTS/		
- 6	AN507-832R	. SCREW	12	
	AN365-832	. NUT	12	
		----*----		
- 7	AD475	. DUCT,AIR INTAKE	2	3
		/ATTACHING PARTS/		
- 8	AN3	. BOLT.	8	
	AN365-1032	. NUT	8	
		----*----		
- 9	95-919100-23	. AFTERBODY,INDUCTION AIR LH.	1	3
	95-919100-23	. AFTERBODY,INDUCTION AIR RH.	1	3
		/SUPERCEDES 95-919100-25/		
	95-919114-1	. BOX ASSY,CARBURETOR AIR LH.	1	4
		/USED UNTIL KIT 95-805 IS INSTALLED/		
		. BOX ASSY,CARBURETOR AIR LH /BUY 95-919114-19/		5
		/USED AFTER KIT 95-805 IS INSTALLED/		
	95-919114-19	. BOX ASSY,CARBURETOR AIR LH.	1	6
		/ATTACHING PARTS/		
- 10	AN74A3	. BOLT.	4	
	AN960-416	. WASHER.	4	
		----*----		
	95-919112-1	. BOX ASSY,CARBURETOR AIR RH.	1	4
		/USED UNTIL KIT 95-805 IN INSTALLED/		
	95-919112-109	. BOX ASSY,CARBURETOR AIR RH.	1	7
		/ATTACHING PARTS/		
	AN74A3	. BOLT.	4	
	AN960-416	. WASHER.	4	
		----*----		
- 11	95-919114-11	. . WELD ASSY,BOX LH.	1	8
	95-919114-17	. . WELD ASSY,BOX LH.	1	6
	95-919112-15	. . WELD ASSY,BOX RH.	1	1
- 12	95-919112-19	. . DOOR,CARBURETOR AIR BOX	1	1
		/ATTACHING PARTS/		
- 13	AN520-8	. . SCREW	8	
	AN960-8	. . WASHER.	8	
		----*----		
- 14	95-919112-39	. . VALVE,CARBURETOR AIR.	1	4
		/USED UNTIL KIT 95-805 IS INSTALLED/		
	95-919112-81	. . VALVE,CARBURETOR AIR.	1	7
		/USED AFTER KIT 95-805 IS INSTALLED/		
		/ATTACHING PARTS/		
- 15	AN515-440	. . SCREW	2	
- 16	AN515-6	. . SCREW	2	
	AN960-4L	. . WASHER.	2	
	AN960-6	. . WASHER.	2	
	AN365-440	. . NUT	2	
	AN365-632	. . NUT	2	
		----*----		

FIG. & INDEX NO.	PART NO.	DESCRIPTION 1 2 3 4 5 6 7	UNITS PER ASSY	USABLE ON CODE
53 - 17	95-919112-27	. . WELL ASSY,BUSHING	2	4
		/USED UNTIL KIT 95-805 IS INSTALLED/		
	95-919112-93	. . WELL ASSY,BUSHING	2	5
		/USED AFTER KIT 95-805 IS INSTALLED/		
	95-919112-95	. . WELL ASSY,BUSHING	2	6
		/ATTACHING PARTS/		
	MS20365-524	. . NUT	2	
	AN960-516	. . WASHER.	2	
		----*----		
- 18	95-919112-25	. . WELL ASSY,BUSHING	1	4
		/USED UNTIL KIT 95-805 IS INSTALLED/		
	95-919112-95	. . WELL ASSY,BUSHING	1	7
		/USED AFTER KIT 95-805 IS INSTALLED/		
- 19	95-919112-23	. . WELL ASSY,BUSHING	1	4
		/USED UNTIL KIT 95-805 IS INSTALLED/		
	95-919112-97	. . WELL ASSY,BUSHING	1	5
		/USED AFTER KIT 95-805 IS INSTALLED/		
	95-919112-95	. . WELD ASSY,BUSHING	1	6
- 20	95-919112-45	. . WELD ASSY,VALVE	1	4
		/USED UNTIL KIT 95-805 IS INSTALLED/		
	95-919112-85	. . WELD ASSY,VALVE	1	5
		/USED AFTER KIT 95-805 IS INSTALLED/		
	95-919112-103	. . WELD ASSY,VALVE	1	6
	AN960-416	. . WASHER.	1	
- 21	95-919112-29	. . ROD,CARBURETOR AIR CONTROL.	1	8
	95-919112-111	. . ROD,CARBURETOR AIR CONTROL.	1	6
- 22	S197	. . CLEVIS.	1	8
	HF3	. . END,ROD	2	6
	AN380C2-2	. . PIN,COTTER.	3	8
	MS20365-1032	. . NUT	2	6
- 23	95-919112-37	. . VALVE,CARBURETOR AIR.	1	4
		/USED UNTIL KIT 95-805 IS INSTALLED/		
	95-919112-83	. . VALVE,CARBURETOR AIR.	1	7
		/USED AFTER KIT 95-805 IS INSTALLED/		
		/ATTACHING PARTS/		
- 24	AN515-440	. . SCREW	2	
- 25	AN515-6	. . SCREW	2	
	AN960-4L	. . WASHER.	2	
	AN960-6	. . WASHER.	2	
	AN365-440	. . NUT	2	
	AN365-632	. . NUT	2	
		----*----		
- 26	95-919112-51	. . WELD ASSY,VALVE	1	4
		/USED UNTIL KIT 95-805 IS INSTALLED/		
	95-919112-89	. . WELD ASSY,VALVE	1	5
		/USED AFTER KIT 95-805 IS INSTALLED/		
	95-919112-107	. . WELD ASSY,VALVE	1	6
- 27	AN3-5	. . BOLT.	1	8
	AN3	. . BOLT.	2	6
	AN960-10L	. . WASHER.	1	8
	AN960-10L	. . WASHER.	2	6
	AN315-3	. . NUT	2	6
	95-919100-27	. PLUG,CARBURETOR AIR BOX /USED WITHOUT	1	1
		CARBURETOR AIR TEMPERATURE INSTL/		
	AN960-1016	. WASHER.	1	1
	95-919117-1	. BOX ASSY,INDUCTION AIR LH	1	2
	95-919117-3	. BOX ASSY,INDUCTION AIR RH	1	2
		/ATTACHING PARTS/		
	AN74-A3	. BOLT.	4	
	AN960-416	. WASHER.	4	
	AN365-428	. NUT	4	
		----*----		
- 28	95-919117-39	. . LINK.	1	2
		/ATTACHING PARTS/		
	NAS1297-303	. . BOLT.	2	
	3515-14-05	. . WASHER.	4	
	AN320-3	. . NUT	2	
	MS24665-132	. . COTTER PIN.	2	
		----*----		

FIG. & INDEX NO.	PART NO.	DESCRIPTION 1 2 3 4 5 6 7	UNITS PER ASSY	USABLE ON CODE
53 - 29	95-919117-5	WELD ASSY,AIR BOX LH	1	2
	95-919117-7	WELD ASSY,AIR BOX RH	1	2
	95-919117-19	VALVE ASSY	1	2
		/ATTACHING PARTS/		
	AN960-516	WASHER	1	
- 30	MS20365-524C	NUT	1	
		----*----		
- 31	95-919117-37	WELD ASSY,SHAFT	1	2
- 32	95-919117-27	VANE	1	2
		/ATTACHING PARTS/		
	AN515-R832	SCREW	4	
	AN960-8	WASHER	4	
	H10-08	NUT	4	
		----*----		
- 33	95-919112-69	WASHER	4	2
- 34	95-919112-95	WELD ASSY,BUSHING	4	2
- 35	95-919100-47	LEVER ASSY	1	2
- 36	95-919117-29	SUPPORT	1	2
		/ATTACHING PARTS/		
	AN3	BOLT	2	
	AN960-10	WASHER	2	
	MS20365-1032C	NUT	2	
		----*----		
- 37	95-919117-35	VANE	1	2
		/ATTACHING PARTS/		
	AN515R832	SCREW	4	
	AN960-8	WASHER	4	
	H10-08	NUT	4	
		----*----		
- 38	95-919117-31	WELD ASSY,SHAFT	1	2
		/ATTACHING PARTS/		
	AN960-516	WASHER	2	
	MS20365-524	NUT	1	
		----*----		
- 39	95-919117-41	CLIP	1	2
- 40	95-919117-43	DOOR	1	2
		/ATTACHING PARTS/		
	AN520-R8	SCREW	7	
	AN960-8	WASHER	7	
	K1000-832	NUTPLATE	3	
		----*----		
- 41	95-919112-35	DOOR ASSY	1	2
	95-919112-31	HINGE	1	2
	95-919112-33	DOOR	1	2
	35-910288	SPRING	1	2
	AN253-2-525	PIN,HINGE	1	2
- 42	AN520-832	SCREW,STOP	1	2
	AN340-8	NUT	1	2
	AN935-8	WASHER	1	2

CODE	EFFECTIVITY	CODE	EFFECTIVITY
1	TD-1 THRU TD-452	2	TD-534 AND AFTER
3	TD-1 THRU TD-452, TD-534 AND AFTER	4	TD-1 THRU TD-173
5	TD-174 THRU TD-402	6	TD-403 THRU TD-452
7	TD-174 THRU TD-452	8	TD-1 THRU TD-402

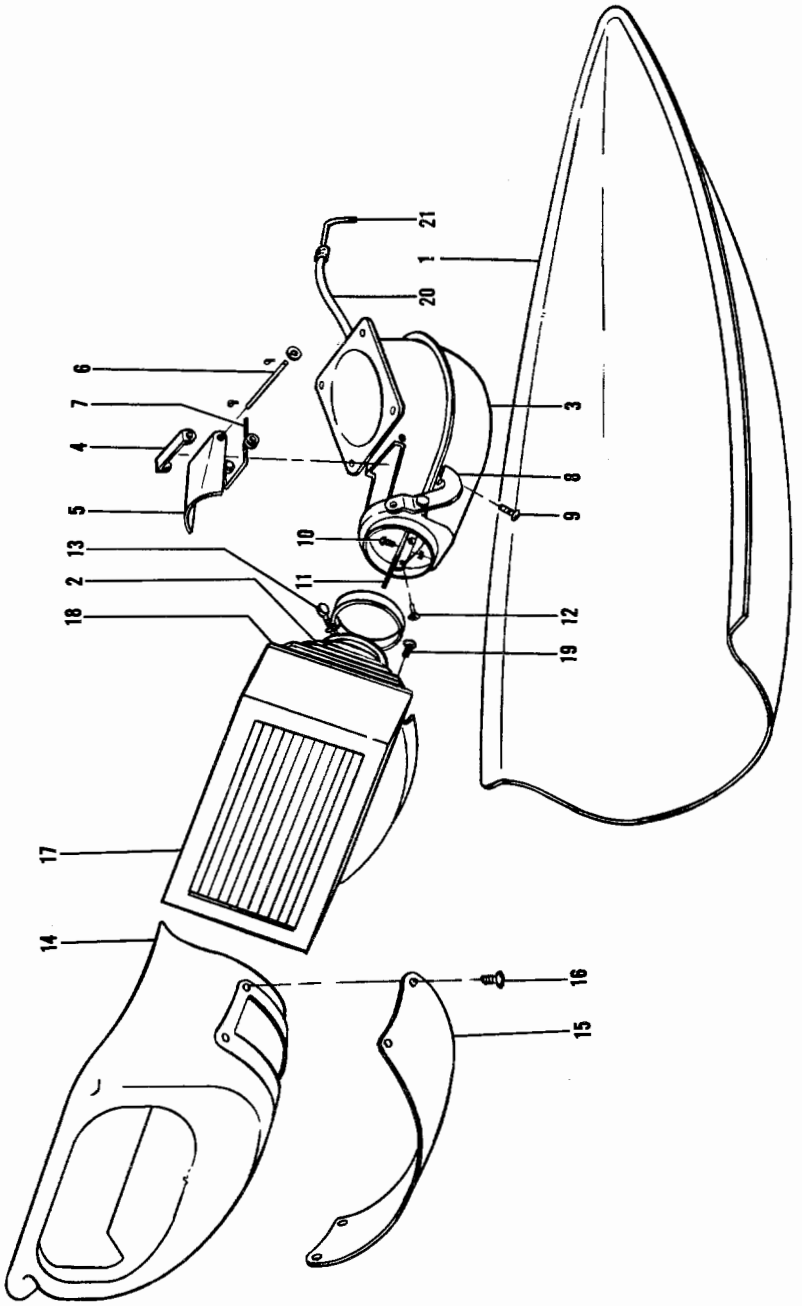

Figure 53A. Induction Air (TD-453 thru TD-533)

FIG. & INDEX NO.	PART NO.	DESCRIPTION 1 2 3 4 5 6 7	UNITS PER ASSY	USABLE ON CODE
		SYSTEM INSTL,AIR INDUCTION LH		1
		/SEE FIG. 49A FOR NHA/		
		SYSTEM INSTL,AIR INDUCTION LH		2
		/SEE FIG. 49A FOR NHA/		
		SYSTEM INSTL,AIR INDUCTION RH		1
		/SEE FIG. 49A FOR NHA/		
		SYSTEM INSTL,AIR INDUCTION RH		2
		/SEE FIG. 49A FOR NHA/		
53A- 1	95-919100-29	AFTERBODY,AIR INDUCTION LH	1	3
	95-919100-31	AFTERBODY,AIR INDUCTION RH	1	3
- 2	95-380006	DUCT,CARBURETOR AIR FLEXIBLE	1	3
	35-919149-10	VALVE ASSY,CARBURETOR AIR	1	1
	35-919149-12	VALVE ASSY,CARBURETOR AIR	1	2
- 3	35-919148-18	HOUSING ASSY,CARBURETOR AIR	1	1
	35-919148-20	HOUSING ASSY,CARBURETOR AIR	1	2
- 4	35-919148-12	DOUBLER,CARBURETOR AIR HOUSING	1	3
- 5	35-919138-1	DOOR ASSY,CARBURETOR VALVE ALTERNATE AIR	1	3
		/ATTACHING PARTS/		
- 6	35-919149-4	PIN	1	1
	35-919149-14	PIN	1	2
	AN960D6L	WASHER	2	
	AN380-1-1	PIN,COTTER	2	
		----*----		
- 7	35-919133	SPRING,CARBURETOR VALVE ALTERNATE AIR DOOR	1	3
- 8	35-919146-4	ARM ASSY,CARBURETOR VALVE	1	3
		/ATTACHING PARTS/		
- 9	AN515-8-12	SCREW	1	
- 10	AN515-4-8	SCREW	1	
	AN960-4	WASHER	1	
	AN365-440	NUT	1	
		----*----		
- 11	35-919139	VALVE,CARBURETOR AIR	1	3
		/ATTACHING PARTS/		
- 12	AN515-4-8	SCREW	2	
	AN960-4	WASHER	2	
	AN365-440	NUT	2	
		----*----		
- 13	105798-13	CLAMP,CARBURETOR AIR FLEXIBLE DUCT	1	3
	95-919100-3	HEAD ASSY,DUCT	1	3
- 14	95-919100-5	DUCT,INDUCTION AIR	1	3
- 15	95-919100-15	DOOR ASSY,INDUCTION AIR	1	3
		/ATTACHING PARTS/		
- 16	98265-1-.130	STUD	4	
	98265-1-.150	STUD	1	
	98265-2-.210	STUD	1	
	99836	PIN,CROSS	6	
		----*----		
- 17	121128-1	FILTER ASSY,AIR	1	3
- 18	95-919100-11	PLATE,AIR INDUCTION	1	3
		/ATTACHING PARTS/		
- 19	AN507-832R	SCREW	12	
	AN365-832	NUT	12	
		----*----		
- 20	106043ZC74	HOSE	1	2
		/ATTACHING PARTS/		
	AN737RM22	CLAMP	2	
		----*----		
- 21	95-919100-37	TUBE	1	2

CODE	EFFECTIVITY	CODE	EFFECTIVITY
1	TD-453 THRU TD-497	2	TD-498 THRU TD-533
3	TD-453 THRU TD-533		

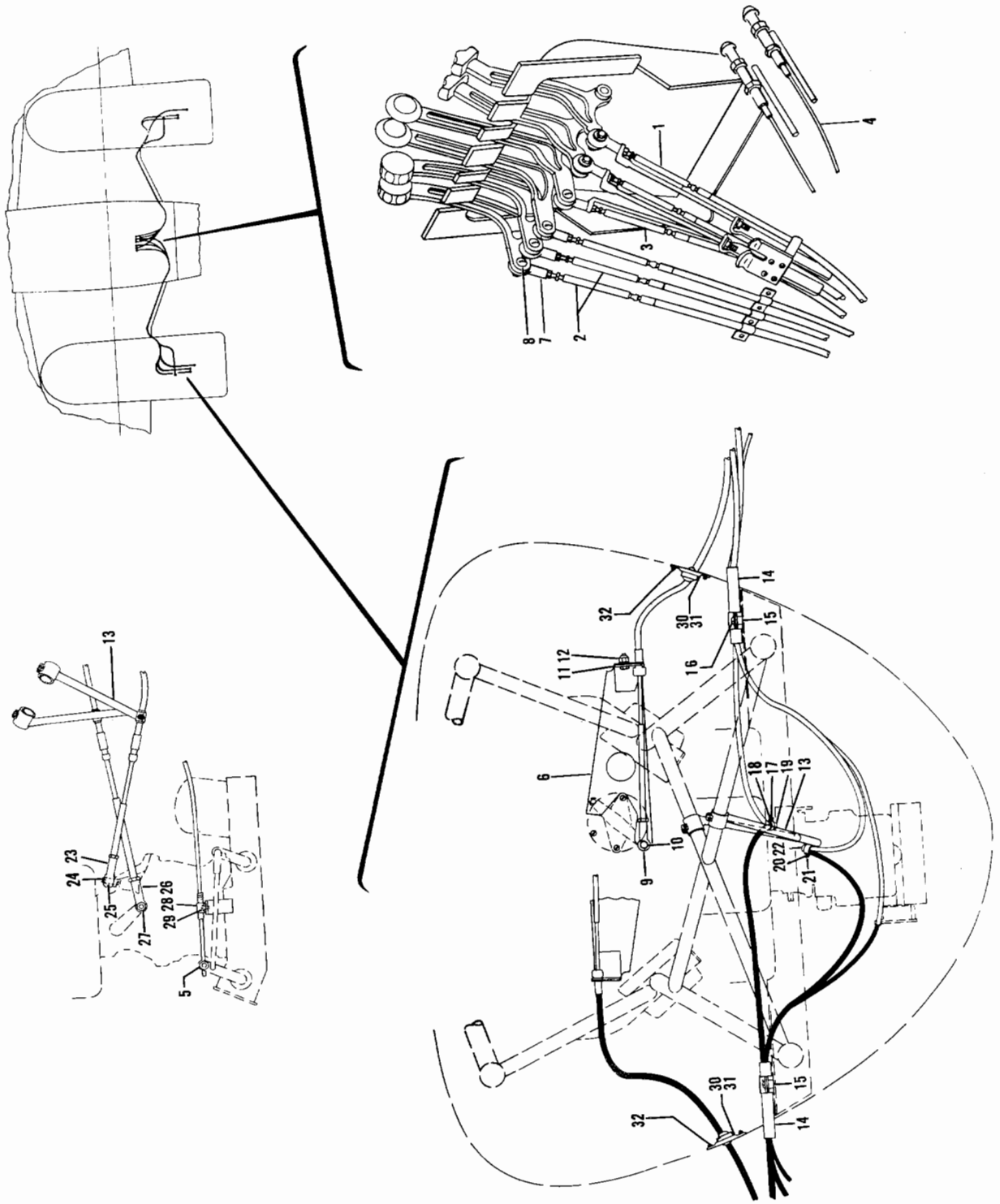

Figure 54. Engine Controls (Sht. 1 of 2 Shts.)

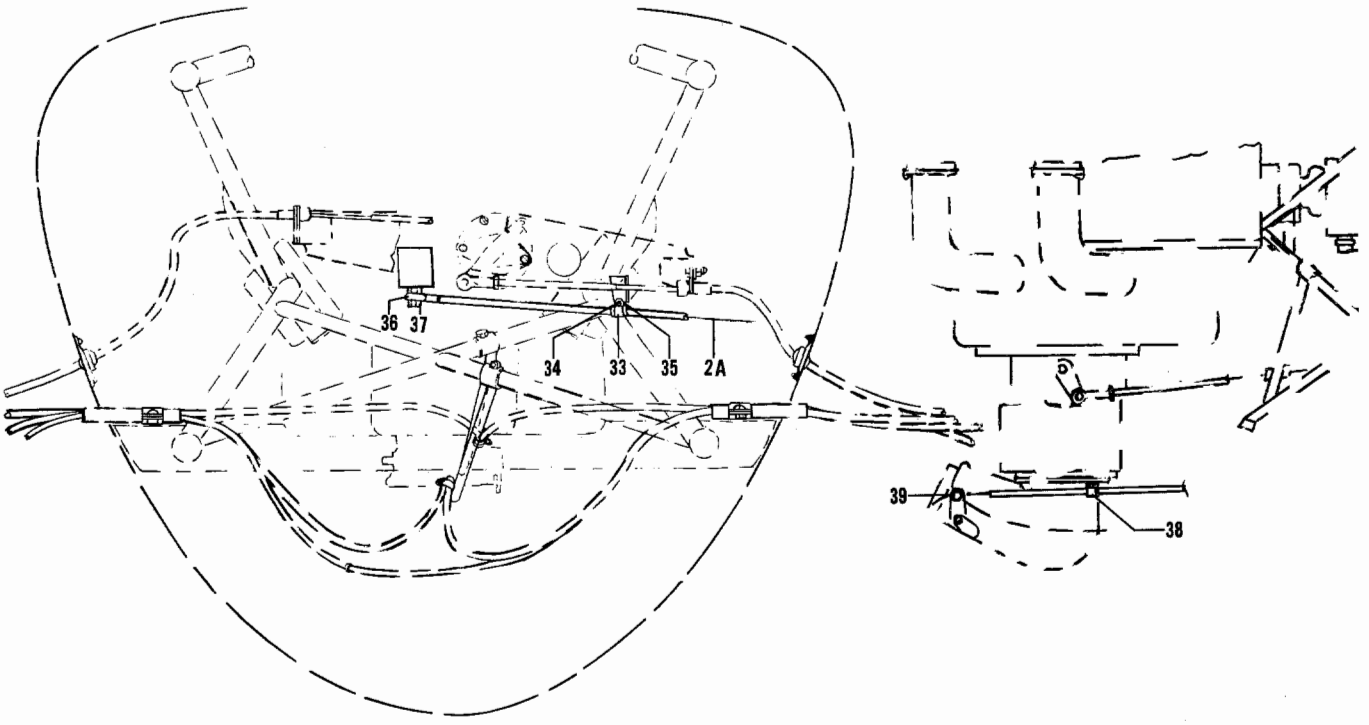

Figure 54. Engine Controls (Sht. 2 of 2 Shts.)

FIG. & INDEX NO.	PART NO.	DESCRIPTION 1 2 3 4 5 6 7	UNITS PER ASSY	USABLE ON CODE
		CONTROLS INSTL,ENGINE		1
		CONTROLS INSTL,ENGINE		2
		CONTROLS INSTL,ENGINE		3
54 - 1	40209-5	. CONTROL ASSY,PROPELLER GOVERNOR LH.	1	
	40209-6	. CONTROL ASSY,PROPELLER GOVERNOR RH.	1	
- 2	40209-7	. CONTROL ASSY,FUEL MIXTURE	2	1
- 2A	40209-5	. CONTROL ASSY,FUEL MIXTURE LH.	1	2
	50-389012-9	. CONTROL ASSY,FUEL MIXTURE LH.	1	3
		/SUPERCEDES 40209-17/		
	40209-6	. CONTROL ASSY,FUEL MIXTURE RH.	1	2
	40209-7	. CONTROL ASSY,FUEL MIXTURE RH.	1	3
- 3	SA2951-26	. CONTROL ASSY,THROTTLE LH.	1	
	SA2951-27	. CONTROL ASSY,THROTTLE RH.	1	
- 4	95-940011	. CONTROL ASSY,CARBURETOR HEAT LH	1	
	95-940011-7	. CONTROL ASSY,CARBURETOR HEAT RH	1	
		/ATTACHING PARTS/		
- 5	35-550520	. BOLT.	1	
	100801X4-0135	. SPACER.	1	
	AN960-10	. WASHER.	2	
	AN365-1032	. NUT	1	
		----*----		
- 6	95-940000-15	. BRACKET ASSY,ENGINE CONTROLS.	2	1
	95-940000-43	. BRACKET ASSY,ENGINE CONTROLS LH	1	4
	95-940000-47	. BRACKET ASSY,ENGINE CONTROLS RH	1	4
- 7	REB3N	. END,ROD	6	
		/ATTACHING PARTS/		
- 8	AN23-15A	. BOLT.	1	
	AN960-10	. WASHER.	1	
	AN364-1032	. NUT	1	
	AN316-4R	. NUT	1	
		----*----		

FIG. & INDEX NO.	PART NO.	DESCRIPTION 1 2 3 4 5 6 7	UNITS PER ASSY	USABLE ON CODE
54 - 9	REB3N	END,ROD	2	
		/ATTACHING PARTS/		
- 10	AN3-11	BOLT	1	
	AN310-3	NUT	1	
	AN316-4R	NUT	1	
	AN380-2-2	PIN,COTTER	1	
		----*----		
- 11	RA1039C	CLAMP	2	
		/ATTACHING PARTS/		
- 12	AN[illegible]-5A	BOLT	1	
	AN960-416L	WASHER	1	
	AN365-428	NUT	1	
		----*----		
- 13	95-940000-21	WELD ASSY,ENGINE CONTROLS LH	1	5
	95-940000-27	WELD ASSY,ENGINE CONTROLS RH	1	5
	95-940017-1	BRACKET,ENGINE CONTROL	1	3
	95-940017-3	BRACKET,ENGINE CONTROL	1	3
		/ATTACHING PARTS/		
	AN3A	BOLT	1	
	AN960-10	WASHER	1	
	S-241	BUSHING	1	
	AN365-1032	NUT	1	
		----*----		
- 14	95-940000-31	TUBE,ENGINE THROTTLE CONTROL	2	6
	95-940000-37	TUBE,ENGINE THROTTLE CONTROL	2	2
- 15	100801X4-0250	SPACER	2	
- 16	AN520-10	SCREW	2	
- 17	561D4	CLAMP	1	
		/ATTACHING PARTS/		
- 18	AN520-10R	SCREW	2	
- 19	S241	BUSHING	2	
	AN960-10	WASHER	2	
	AN365-1032	NUT	2	
		----*----		
- 20	561D4	CLAMP	4	
		/ATTACHING PARTS/		
- 21	AN520-10R	SCREW	1	
- 22	95-940000-33	BUSHING	1	
	AN960-10	WASHER	1	
	AN365-1032	NUT	1	
		----*----		
- 23	REB3N	END,ROD	2	
		/ATTACHING PARTS/		
- 24	AN3	BOLT	1	
- 25	105739S-XJ0160	BUSHING	1	
	102933S4ZJ0093	SPACER	1	
	AN310-3	NUT	1	
	AN316-4R	NUT	1	
	AN380-2-2	PIN	1	
		----*----		
- 26	REB3N	END,ROD	2	
		/ATTACHING PARTS/		
- 27	AN3	BOLT	1	
	AN310-3	NUT	1	
	AN316-4R	NUT	1	
	AN380-2-2	PIN	1	
		----*----		
- 28	AN742D3	CLAMP	2	
		/ATTACHING PARTS/		
- 29	AN526-832-8	SCREW	1	
	AN960-8	WASHER	2	
	AN365-832	NUT	1	
		----*----		
- 30	95-940000-35	SHIELD,RETAINER	2	
	AN931-5-12	GROMMET	2	

FIG. & INDEX NO.	PART NO.	DESCRIPTION 1 2 3 4 5 6 7	UNITS PER ASSY	USABLE ON CODE
54 - 31	112436-6	RETAINER,FIREPROOF GROMMET	2	
		/ATTACHING PARTS/		
- 32	AN507-632	SCREW	2	
	AN960-6	WASHER	2	
	AN365-632	NUT	2	
		----*----		
- 33	561DS4-4	CLAMP,FUEL MIXTURE CONTROL LH	1	2
		/ATTACHING PARTS/		
- 34	AN520-10R	SCREW	1	
	AN960-10	WASHER	1	
	MS20365-1032	NUT	1	
		----*----		
- 35	33-940000-9	BUSHING,FUEL MIXTURE CONTROL LH	1	2
	RA1039C	CLAMP,FUEL MIXTURE CONTROL RH	1	2
		/ATTACHING PARTS/		
	AN4-5A	BOLT	1	
	AN960-416L	WASHER	1	
	MS20365-428	NUT	1	
		----*----		
- 36	REB3N	END,FUEL MIXTURE CONTROL ROD	1	
		/ATTACHING PARTS/		
- 37	AN3	BOLT	1	
	AN310-3	NUT	1	
	AN316-4R	NUT	1	
	AN380-2-2	PIN,COTTER	1	
		----*----		
	95-940000-51	BRACE,BRACKET RH	1	
		/ATTACHING PARTS/		
	AN520-10R	SCREW	1	
	AN960-10	WASHER	1	
	MS20365-1032	NUT	1	
		----*----		
- 38	TA726TD4	CLAMP,ALTERNATE AIR CONTROL	1	2
- 39	S207-6	BOLT,ALTERNATE AIR CONTROL	1	2
	AN960-416	WASHER	1	2
	AN315-4R	NUT	1	2
	AN310-4	NUT	1	2
	AN380-2-3	PIN,COTTER	1	2

CODE	EFFECTIVITY	CODE	EFFECTIVITY
1	TD-1 THRU TD-452	2	TD-453 THRU TD-533
3	TD-534 AND AFTER	4	TD-453 AND AFTER
5	TD-1 THRU TD-533	6	TD-1 THRU TD-452, TD-534 AND AFTER

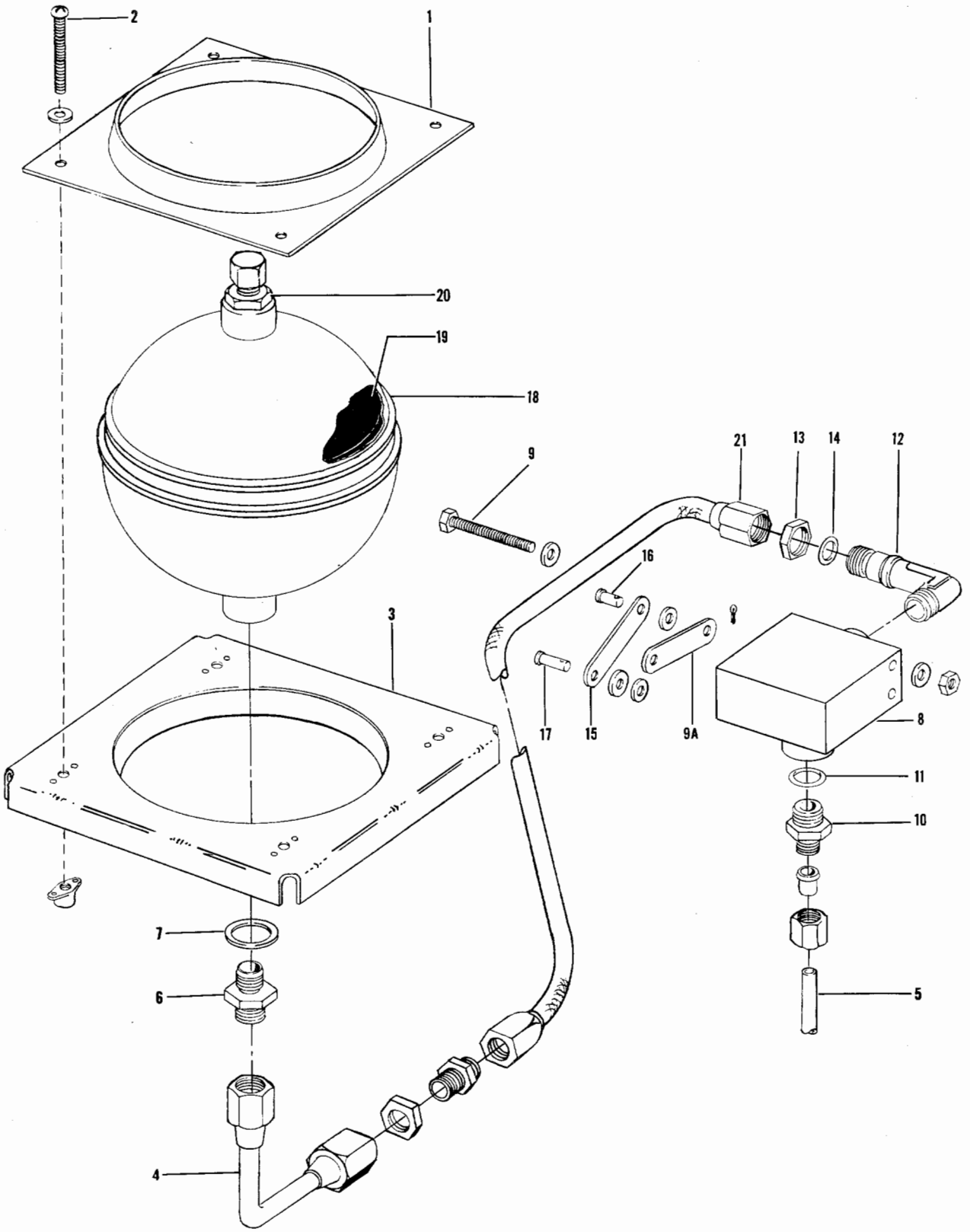

Figure 56. Propeller Governor Accumulator

FIG. & INDEX NO.	PART NO.	DESCRIPTION 1 2 3 4 5 6 7	UNITS PER ASSY	USABLE ON CODE
		ACCUMULATOR INSTL,PROPELLER GOVERNOR LH		
		/OPTIONAL/ /SEE FIG. 1 FOR NHA/		
		ACCUMULATOR INSTL,PROPELLER GOVERNOR RH		
		/OPTIONAL/ /SEE FIG. 1 FOR NHA/		
56 - 1	95-960011-3	. PLATE,PROPELLER GOVERNOR LH	1	
	95-960011-4	. PLATE,PROPELLER GOVERNOR RH	1	
		/ATTACHING PARTS/		
- 2	AN520-10	. SCREW	4	
	AN960-10	. WASHER.	4	
		----*----		
- 3	95-960011-601	. SUPPORT,PROPELLER GOVERNOR ACCUMULATOR LH . .	1	
		/SPARE ASSY,SEE SECTION 4 FOR COMPONENTS/		
		. SUPPORT,PROPELLER GOVERNOR ACCUMULATOR LH . .		
	95-960011-602	. SUPPORT,PROPELLER GOVERNOR ACCUMULATOR RH . .	1	
		/SPARE ASSY,SEE SECTION 4 FOR COMPONENTS/		
		. SUPPORT,PROPELLER GOVERNOR ACCUMULATOR RH . .		
- 4	95-960011-7	. TUBE ASSY,PROPELLER GOVERNOR ACCUMULATOR. . .	1	
- 5	95-960011-21	. TUBE ASSY,PROPELLER ACCUMULATOR LH.	1	
	95-960011-23	. TUBE ASSY,PROPELLER ACCUMULATOR RH.	1	
- 6	95-960011-13	. REDUCER,PROPELLER ACCUMULATOR	1	1
	AN919-12D	. REDUCER,PROPELLER ACCUMULATOR	1	2
- 7	AN901-8A	. GASKET.	1	1
	AN6290-8	. GASKET.	1	2
- 8	HE721-3	. VALVE	1	
		/ATTACHING PARTS/		
- 9	AN3	. BOLT.	2	
	AN960D10	. WASHER.	2	
	AN960D10L	. WASHER.	2	
	AN960-10	. WASHER.	2	
	AN365-1032	. NUT	2	
		----*----		
- 9A	HE1097	. . HANDLE.	1	
		/ATTACHING PARTS/		
	AN960-10L	. . WASHER.	1	
	AN365-1032	. . NUT	1	
		----*----		
- 10	AN919-6D	. REDUCER	1	
- 11	AN6290-6	. GASKET.	1	
- 12	AN833-6D	. ELBOW	1	
- 13	AN924-6D	. NUT	1	
- 14	AN6290-6	. GASKET.	1	
- 15	95-960011-17	. ARM ASSY,PROPELLER ACCUMULATOR.	1	
		/ATTACHING PARTS/		
- 16	AN393-9	. PIN	1	
- 17	AN393-15	. PIN	1	
	AN960-10	. WASHER.	2	
	AN960-10L	. WASHER.	1	
	AN380-2	. PIN,COTTER.	2	
		----*----		
- 18	SP2890-1	. ACCUMULATOR,PROPELLER GOVERNOR /REPLACES. . .	1	
		AA14002A & 95-960011-25 ACCUMULATOR/		
- 19	SP-2814	. . DIAPHRAGM,ACCUMULATOR	1	
- 20	AN812-1	. BODY,HIGH PRESSURE AIR VALVE.	1	
- 21	MS28741-6-0250	. HOSE ASSY	1	

CODE	EFFECTIVITY	CODE	EFFECTIVITY
1	TD-1 THRU TD-152	2	TD-153 AND AFTER

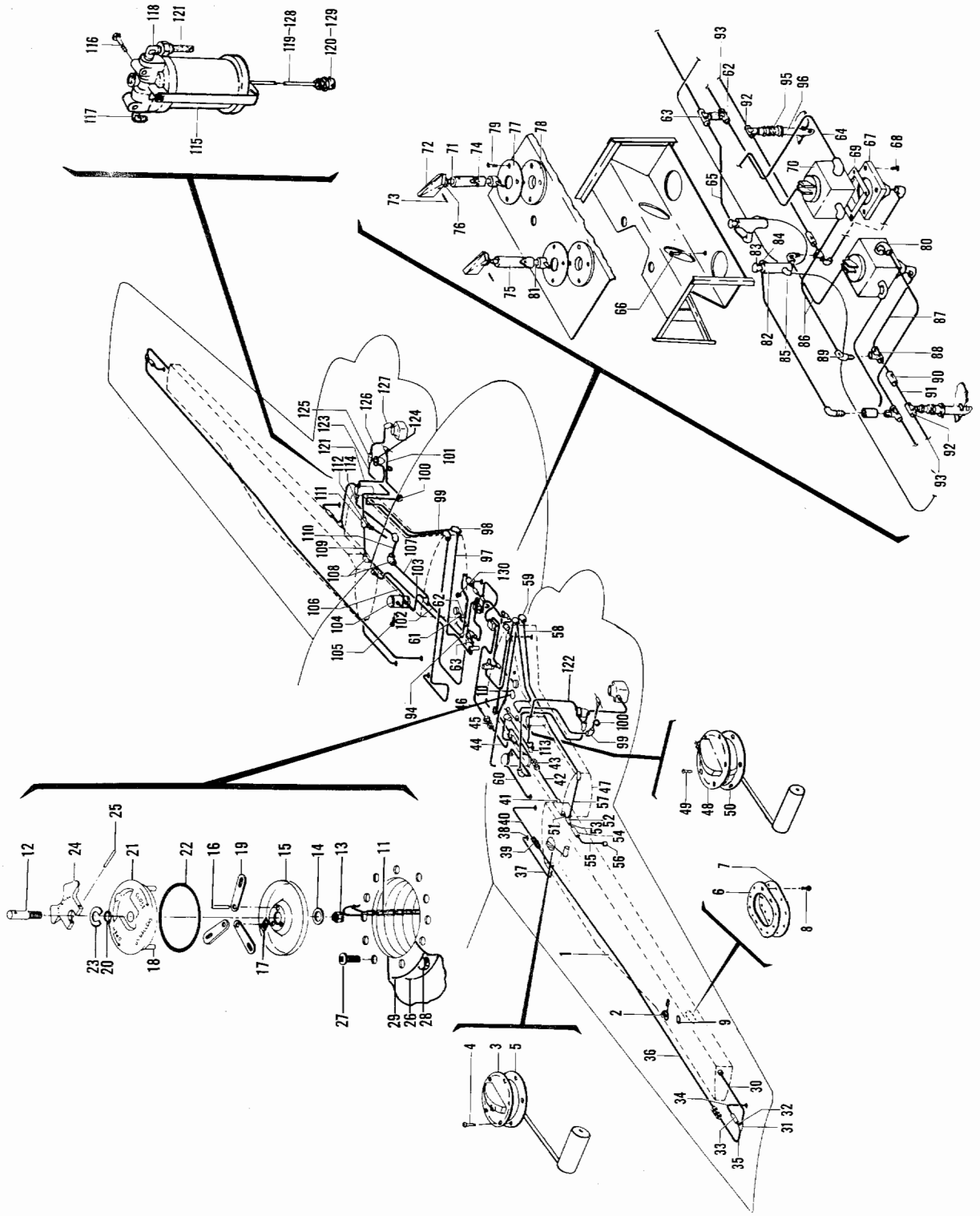

Figure 57. Fuel System (TD-1 thru TD-452)

FIG. & INDEX NO.	PART NO.	DESCRIPTION 1 2 3 4 5 6 7	UNITS PER ASSY	USABLE ON CODE
		FUEL SYSTEM INSTL,84 GALLON /STANDARD/.		1
		FUEL SYSTEM INSTL,112 GALLON /OPTIONAL/		1
57	95-920002-17	. TANK ASSY,17 GALLON LH /STANDARD/	1	1
	95-920011-1	. TANK ASSY,31 GALLON LH /OPTIONAL/	1	1
	95-920002-18	. TANK ASSY,17 GALLON RH /STANDARD/	1	1
- 1	95-920011-2	. TANK ASSY,31 GALLON RH /OPTIONAL/	1	1
	95-369010-1	. TRANSMITTER,LH AUX OUTBD 31 GALLON.	1	8
	5640558	. TRANSMITTER,LH AUX OUTBD 31 GALLON.	1	9
- 2	95-369010-2	. TRANSMITTER,RH AUX OUTBD 31 GALLON.	1	8
	5640555	. TRANSMITTER,RH AUX OUTBD 31 GALLON.	1	9
	95-369010-3	. TRANSMITTER,LH AUX INBD 31 GALLON	1	8
	5640557	. TRANSMITTER,LH AUX INBD 31 GALLON	1	9
- 3	95-369010-4	. TRANSMITTER,RH AUX INBD 31 GALLON	1	8
	5640554	. TRANSMITTER,RH AUX INBD 31 GALLON	1	9
		/ATTACHING PARTS/		
- 4	AN502-10	. SCREW	5	
		----*----		
- 5	35-921503	. GASKET,FUEL GAUGE	2	1
- 6	50-921521	. GASKET,FUEL TANK ACCESS COVER	2	1
- 7	50-921520	. COVER,FUEL TANK ACCESS.	2	1
		/ATTACHING PARTS/		
- 8	AN74-4	. BOLT.	12	
	AN960-416L	. WASHER.	12	
		----*----		
- 9	416-85	. CAP & CHAIN ASSY,AUXILIARY FUEL TANK. 3-INCH	1	1
		FILLER /SUPERCEDES 416-85-31/		
- 10	416-85-25	. CAP & CHAIN ASSY,MAIN FUEL TANK	1	1
		3-INCH FILLER		
- 11	416-61-6	. . CHAIN ASSY,FUEL TANK 6-INCH FILLER.	1	1
	416-50	. . CAP ASSY,FUEL TANK 3-INCH FILLER.	1	1
- 12	416-54	. . . AXLE,FUEL TANK CAP.	1	1
- 13	AN310-4	. . . NUT	1	1
- 14	AF940-416	. . . WASHER.	1	1
	AN380-2-2	. . . PIN,COTTER.	1	1
- 15	416-56	. . . DISC,FUEL TANK CAP ANCHOR	1	1
		/ATTACHING PARTS/		
- 16	416-60	. . . PIN	3	
		----*----		
- 17	A1059-014-3	. . . WASHER,SPRING	6	1
- 18	416-59	. . . PIN,FUEL TANK CAP DRIVE	3	1
- 19	416-55	. . . PAWL,FUEL TANK CAP.	3	1
- 20	MS29513-10	. . . RING,FUEL TANK CAP O.	1	1
- 21	416-52	. . . BASE,FUEL TANK CAP.	1	1
- 22	MS29513-232	. . . RING,FUEL TANK CAP O.	1	1
- 23	427-8	. . . PLATE,FUEL TANK CAP BEARING	1	1
- 24	416-53	. . . HANDLE,FUEL TANK CAP.	1	1
		/ATTACHING PARTS/		
- 25	AN122697	. . . PIN	1	
		----*----		
	50-921518	. ADAPTER ASSY,AUXILIARY FUEL TANK FILLER CAP .	1	1
- 26	45-921544	. ADAPTER ASSY,MAIN FUEL TANK FILLER CAP. . . .	1	1
		/ATTACHING PARTS/		
- 27	AN509-1032R9	. SCREW	12	
- 28	AN74-3	. BOLT.	12	
	AN960-416L	. WASHER.	12	
		----*----		
- 29	35-921502	. GASKET,FUEL TANK FILLER CAP ADAPTER	1	1
	95-920002-23	. TUBE ASSY,FUEL /STANDARD/	2	1
	95-920001-9	. TUBE ASSY,FUEL LH	1	1
- 30	95-920001-10	. TUBE ASSY,FUEL RH	1	1
- 31	AN824-4D	. TEE	2	1
	95-920001-13	. TUBE ASSY,FUEL LH	1	1
- 32	95-920001-14	. TUBE ASSY,FUEL RH	1	1
- 33	1111-517700	. VALVE,CHECK	2	2
	1111-595272		2	

FIG. & INDEX NO.	PART NO.	DESCRIPTION 1 2 3 4 5 6 7	UNITS PER ASSY	USABLE ON CODE
57	95-920001-15	TUBE ASSY,FUEL LH	1	1
- 34	95-920001-16	TUBE ASSY,FUEL RH	1	1
	95-920001-11	TUBE ASSY,FUEL LH	1	1
- 35	95-920001-12	TUBE ASSY,FUEL RH	1	1
- 36	95-920001-97	TUBE ASSY,FUEL	2	1
	95-920001-87	TUBE ASSY,FUEL LH	1	1
- 37	95-920001-88	TUBE ASSY,FUEL RH	1	1
- 38	CCA4850	VALVE,DRAIN	2	1
	AN822-4D	ELBOW	2	1
	AN910-1D	COUPLING	2	1
- 39	106200H4	HOSE /ORDER 1/4 ID MIL6000,SPECIFY LENGTH/	6	1
	95-920001-99	TUBE ASSY,FUEL LH	1	1
- 40	95-920001-100	TUBE ASSY,FUEL RH	1	1
- 41	45-921541	STRAINER ASSY,FUEL CELL	2	1
	95-920001-37	TUBE ASSY,FUEL LH	1	1
- 42	95-920001-38	TUBE ASSY,FUEL RH	1	1
- 43	AN815-6D	NIPPLE	2	1
	95-920001-39	TUBE ASSY,FUEL LH	1	1
- 44	95-920001-40	TUBE ASSY,FUEL RH	1	1
- 45	AN832-6D	UNION	2	1
	95-920001-45	TUBE ASSY,FUEL LH	1	1
- 46	95-920001-46	TUBE ASSY,FUEL RH	1	1
	50-920008-7	CELL ASSY,WING FUEL LH	1	1
- 47	50-920008-8	CELL ASSY,WING FUEL RH	1	1
	50-920065	STIFFENER,FUEL CELL LH	1	1
	50-920065-1	STIFFENER,FUEL CELL RH	1	1
	50-920064	STRAINER ASSY,FUEL CELL	1	1
- 48	50-920071	TRANSMITTER,LH&RH MAIN 25 GAL	2	8
	5640556	TRANSMITTER,LH MAIN 25 GAL	1	9
	5641801	TRANSMITTER,RH MAIN 25 GAL	1	9
		/ATTACHING PARTS/		
- 49	AN502-10	SCREW	5	
		----*----		
- 50	35-921503	GASKET,FUEL GAUGE	2	1
- 51	95-920001-1	TUBE ASSY,FUEL	2	1
- 52	AN824-4D	TEE	2	1
- 53	95-920001-3	TUBE ASSY,FUEL	2	1
- 54	1111-517700	VALVE,CHECK	2	2
	1111-595272	VALVE,CHECK /SUPERCEDES 366-00/	2	3
	95-920001-5	TUBE ASSY,FUEL LH	1	1
- 55	95-920001-101	TUBE ASSY,FUEL RH	1	1
- 56	106200H4	HOSE /ORDER 1/4 ID MIL6000,SPECIFY LENGTH/	4	1
- 57	95-920001-63	TUBE ASSY,FUEL	2	1
	106200H4	HOSE /ORDER 1/4 ID MIL6000,SPECIFY LENGTH/	2	1
	95-920001-7	TUBE ASSY,FUEL LH	1	1
- 58	95-920001-8	TUBE ASSY,FUEL RH	1	1
- 59	AN821-4D	ELBOW	2	1
	35-924094	TUBE ASSY,VENT LINE LH	1	1
- 60	35-924095	TUBE ASSY,VENT LINE RH	1	1
- 61	95-920001-165	TUBE ASSY,FUEL	2	1
- 62	AN783D6	TEE	2	1
- 63	AN834-4D	TEE,LH	1	1
	AN833-4D	ELBOW,RH	1	1
	AN893-2D	BUSHING	2	1
	AN924-4D	NUT	2	1
	MS29512-4	GASKET	2	1
	MS29512-6	GASKET	2	1
- 64	95-920001-59	TUBE ASSY,FUEL LH	1	1
	95-920001-60	TUBE ASSY,FUEL RH	1	1
- 65	95-920001-129	TUBE ASSY,FUEL	2	1
	95-920001-601	VALVE ASSY,FUEL SELECTOR LH	1	1
		/SPARE ASSY,SEE SECTION 4 FOR COMPONENTS/		
	95-920001-602	VALVE ASSY,FUEL SELECTOR RH	1	1
		/SPARE ASSY,SEE SECTION 4 FOR COMPONENTS/		

FIG. & INDEX NO.	PART NO.	DESCRIPTION 1 2 3 4 5 6 7	UNITS PER ASSY	USABLE ON CODE
		VALVE ASSY,FUEL SELECTOR		4
		VALVE ASSY,FUEL SELECTOR		5
		/ATTACHING PARTS/		
57 - 66	AN500-10	SCREW	2	
	AN936-A10	WASHER	2	
		----*----		
- 67	95-924014-1	BASE,FUEL SELECTOR VALVE	1	4
	95-924014-5	BASE,FUEL SELECTOR VALVE	1	5
		/ATTACHING PARTS/		
- 68	AN500A10-8	SCREW	4	
- 68	AN935-8	WASHER	4	
		----*----		
- 69	50-920030-4	GASKET,FUEL SELECTOR VALVE	1	1
- 70	50-389002	VALVE,FUEL SELECTOR	1	4
	50-389002-1	VALVE,FUEL SELECTOR	1	5
	50-389002-3	VALVE,FUEL SELECTOR	1	5
- 71	95-920001-85	SHAFT,FUEL SELECTOR VALVE	2	1
	95-920001-604	DRIVER ASSY,FUEL SELECTOR VALVE	1	1
		/SPARE ASSY,SEE SECTION 4 FOR COMPONENTS/		
- 72	95-924019	HANDLE,FUEL SELECTOR VALVE	2	1
- 73	52-028-125-0625	PIN	2	1
- 74	52-028-125-0500	PIN	6	1
- 75	AN270B8	JOINT,UNIVERSAL /SUPERCEDES MS20270B8/	2	1
- 76	AN960-616	WASHER	2	1
- 77	95-920001-125	PLATE,BACK	2	1
- 78	95-924015-1	PLATE ASSY,FUEL SELECTOR IDENTIFICATION LH	1	1
	95-924015-2	PLATE ASSY,FUEL SELECTOR IDENTIFICATION RH	1	1
		/ATTACHING PARTS/		
- 79	AN507-832R	SCREW	4	
		----*----		
- 80	AN822-6D	ELBOW	8	1
- 81	95-920001-79	TUBE,FUEL SELECTOR	2	1
- 82	K2404-1/8	PRIMER,ENGINE	2	1
	MS29513-12	SEAL,FUEL PRIMER	1	1
- 83	95-920001-127	SPACER,ENGINE PRIMER	2	1
- 84	AN823-4D	ELBOW	2	1
- 85	AN822-2D	ELBOW	2	1
- 86	95-920001-43	TUBE ASSY,FUEL CROSSFEED	2	1
- 87	95-920001-115	TUBE ASSY,FUEL	2	1
- 88	AN938D6	TEE	2	1
- 89	AN833-6D	ELBOW	4	1
	MS29512-6	GASKET	6	1
	AN924-6D	NUT	4	1
- 90	1111-517702	VALVE,CHECK	2	2
	367-00	VALVE,CHECK /SUPERCEDES 1111-595273/	2	3
- 91	95-920001-111	TUBE ASSY,FUEL	2	1
- 92	AN825-6D	TEE	2	1
- 93	95-920001-113	TUBE ASSY,FUEL	2	1
	AN931-B11-16	GROMMET	2	1
- 94	AN821-6D	ELBOW	2	1
- 95	CCA4850	VALVE,DRAIN	2	1
- 96	95-920001-121	EXTENSION,FUEL DRAIN	2	1
- 97	95-920001-23	TUBE ASSY,FUEL PRIMER LH	1	1
	95-920001-24	TUBE ASSY,FUEL PRIMER RH	1	1
- 98	AN833-2D	ELBOW	2	1
	AN924-2D	NUT	2	1
- 99	95-920001-21	TUBE ASSY,FUEL PRIMER LH	1	1
	95-920001-22	TUBE ASSY,FUEL PRIMER RH	1	1
-100	AN833-2	ELBOW	2	1
	AN924-2	NUT	2	1
-101	95-920001-105	TUBE ASSY,FUEL PRIMER LH	1	1
	95-920001-103	TUBE ASSY,FUEL PRIMER RH	1	1
-102	95-920001-35	TUBE ASSY,FUEL	2	6
	95-920001-143	TUBE ASSY,FUEL LH	1	7
	95-920001-144	TUBE ASSY,FUEL RH	1	7
	AN816-6D	NIPPLE	2	7

FIG. & INDEX NO.	PART NO.	DESCRIPTION 1 2 3 4 5 6 7	UNITS PER ASSY	USABLE ON CODE
57	AN924-6D	NUT	2	1
-103	95-920001-33	TUBE ASSY,FUEL /STANDARD/	2	6
	95-920001-139	TUBE ASSY,FUEL LH /STANDARD/	1	7
	95-920001-140	TUBE ASSY,FUEL RH /STANDARD/	1	7
	AN826-6D	TEE	2	7
-104	476411	PUMP,BOOST /STANDARD/	2	1
		/ATTACHING PARTS/		
-105	AN4	BOLT	2	
	AN960-416	WASHER	2	
	AN365-428	NUT	2	
		----*----		
-106	95-920001-29	TUBE ASSY,FUEL LH	1	1
	95-920001-30	TUBE ASSY,FUEL RH	1	1
-107	95-920001-31	TUBE ASSY,FUEL LH	1	6
	95-920001-141	TUBE ASSY,FUEL LH	1	7
	95-920001-32	TUBE ASSY,FUEL RH	1	6
	95-920001-142	TUBE ASSY,FUEL RH	1	7
-108	AN821-6D	ELBOW	4	1
-109	95-920001-25	TUBE ASSY,FUEL LH	1	1
	95-920001-26	TUBE ASSY,FUEL RH	1	1
-110	95-920001-27	TUBE ASSY,FUEL LH	1	1
	95-920001-28	TUBE ASSY,FUEL RH	1	1
-111	AN783-6	TEE	2	1
	MS29512-6	GASKET	2	1
	AN924-6	NUT	2	1
-112	95-920001-91	RESTRICTOR ASSY,FUEL	2	1
	AN924-2	NUT	2	1
-113	AN833-6	ELBOW	2	1
	AN924-6	NUT	2	1
-114	95-920001-61	TUBE ASSY,FUEL	2	6
-115	G199-25	STRAINER ASSY,FUEL /SEE FIG. 57H/	2	6
	G199-65	STRAINER ASSY,FUEL /SEE FIG. 57H/	2	7
		/ATTACHING PARTS/		
-116	AN4	BOLT	2	6
	AN4A	BOLT	2	7
	AN960D4	WASHER	2	6
	AN960-416	WASHER	2	7
	AN363-428	NUT	2	6
	AN365-428	NUT	2	7
		----*----		
-117	AN822-6	ELBOW,LH	1	1
	AN822-6	ELBOW,RH	2	1
-118	AN823-6	ELBOW,LH	1	1
-119	95-920001-145	TUBE ASSY,FUEL	2	7
	AN823-4D	NIPPLE	2	7
-120	CCA4850	VALVE	2	7
	AN910-1D	COUPLING	2	7
	AN822-4D	NIPPLE	2	7
-121	MS28741-6-0160	HOSE ASSY,FUEL LH	1	6
	MS28741-6-0200	HOSE ASSY,FUEL LH	1	7
	AN832-6	UNION	1	7
	AN924-6	NUT	1	7
-122	MS28741-6-0180	HOSE ASSY,FUEL RH	1	6
	95-920001-155	HOSE ASSY,FUEL RH	1	7
-123	MS28741-6-0250	HOSE ASSY,FUEL LH	1	6
	95-920001-163	HOSE ASSY,FUEL LH	1	7
	AN815-6	UNION	1	7
	95-920001-161	TUBE ASSY,FUEL LH	1	7
	MS28741-6-0220	HOSE ASSY,FUEL RH	1	6
	95-920001-137	HOSE ASSY,FUEL RH	1	7
	AN837-6	UNION	1	7
	AN924-6	NUT	1	7
-124	95-920014	ADAPTER	1	1
-125	AN917-2D	TEE	2	1
	AN911-1	NIPPLE	2	1
	AN912-1D	BUSHING,REDUCER	2	1

FIG. & INDEX NO.	PART NO.	DESCRIPTION 1 2 3 4 5 6 7	UNITS PER ASSY	USABLE ON CODE
57	AN822-6D	ELBOW	4	1
-126	95-920001-119	TUBE ASSY,FUEL	2	6
	95-920001-131	TUBE ASSY,FUEL	2	7
-127	AN822-6D	ELBOW	2	6
-128	95-920001-57	TUBE ASSY,FUEL LH	1	1
	95-920001-58	TUBE ASSY,FUEL RH	1	6
-129	CCA4850	VALVE,DRAIN	2	6
	AN910-1D	COUPLING	2	1
	AN816-4D	NIPPLE	2	1
-130	CCA3400	VALVE,DRAIN	2	1
	35-921532	WASHER,FUEL CELL DRAIN	2	1
	35-921533	CLAMP,FUEL CELL DRAIN	2	1

CODE	EFFECTIVITY	CODE	EFFECTIVITY
1	TD-1 THRU TD-452	2	TD-1 THRU TD-263
3	TD-264 THRU TD-452	4	TD-1 THRU TD-70, EXCEPT TD-69, TD-73 THRU TD-88, TD-94, TD-96, TD-98 THRU TD-109 AND TD-117 THRU TD-126
5	TD-69, TD-71 THRU TD-452,EXCEPT TD-73 THRU TD-88, TD-94, TD-96, TD-98 THRU TD-109 AND TD-117 THRU TD-126	6	TD-1 THRU TD-185
7	TD-186 THRU TD-452	8	TD-1 THRU TD-402
9	TD-403 THRU TD-452		

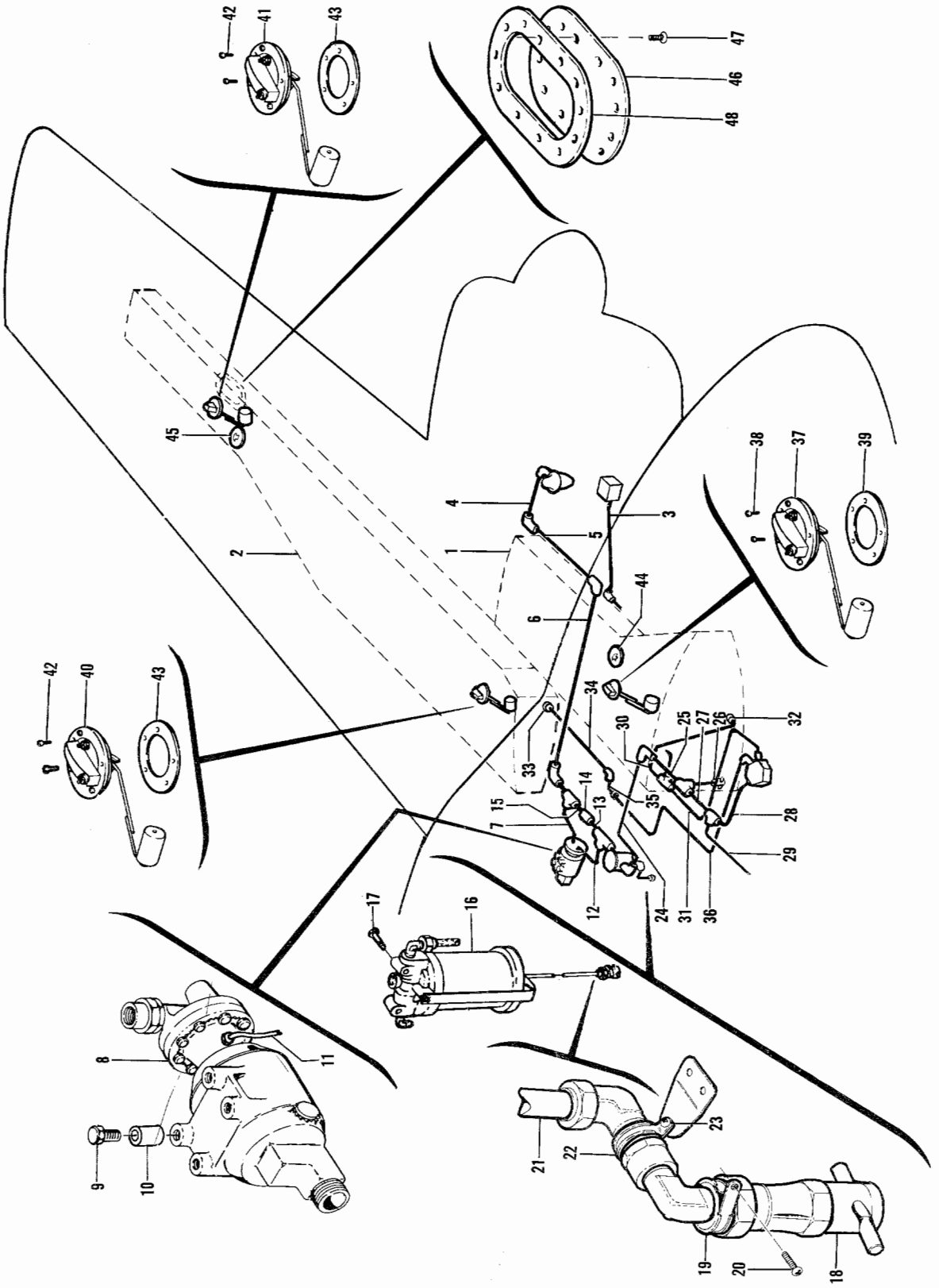

Figure 57A. Fuel Supply System (TD-453 thru TD-533)

FIG. & INDEX NO.	PART NO.	DESCRIPTION 1 2 3 4 5 6 7	UNITS PER ASSY	USABLE ON CODE
		FUEL SYSTEM INSTL		1
		112 GALLON /OPTIONAL/		
57A- 1	50-920008-9	CELL ASSY,25 GALLON FUEL LH	1	1
	50-920008-10	CELL ASSY,25 GALLON FUEL RH	1	1
- 2	95-920011-5	TANK ASSY,31 GALLON FUEL LH	1	1
	95-920011-6	TANK ASSY,31 GALLON FUEL RH	1	1
- 3	MS28741-4-0270	HOSE ASSY,INSTRUMENT FUEL PRESSURE	1	1
	AN823-4	ELBOW,INSTRUMENT FUEL PRESSURE HOSE	1	1
	AN837-4	ELBOW,INSTRUMENT FUEL PRESSURE HOSE	1	1
	AN924-4	NUT,INSTRUMENT FUEL PRESSURE HOSE	1	1
- 4	95-920005-15	HOSE ASSY,ENGINE FUEL SUPPLY LH	1	1
	95-920005-17	HOSE ASSY,ENGINE FUEL SUPPLY RH	1	1
	AN833-6	ELBOW,ENGINE FUEL SUPPLY TUBE LH	2	1
	AN837-6	ELBOW,ENGINE FUEL SUPPLY TUBE RH	1	1
	AN924-6	NUT,ENGINE FUEL SUPPLY TUBE	3	1
- 5	96-920001-137	TUBE ASSY,ENGINE FUEL SUPPLY /LH ONLY/	1	1
- 6	95-920005-9	TUBE ASSY,ENGINE FUEL SUPPLY LH	1	1
	95-920005-10	TUBE ASSY,ENGINE FUEL SUPPLY RH	1	1
	AN824-6D	TEE,ENGINE FUEL SUPPLY TUBE	1	2
	AN821-6D	ELBOW,ENGINE FUEL SUPPLY TUBE	1	3
- 7	96-920001-135	TUBE ASSY,FUEL BOOST PUMP OUTLET LH	1	2
	96-920001-205	TUBE ASSY,FUEL BOOST PUMP OUTLET LH	1	3
	96-920001-209	TUBE	1	3
	96-920001-136	TUBE ASSY,FUEL BOOST PUMP OUTLET RH	1	2
	96-920001-206	TUBE ASSY,FUEL BOOST PUMP OUTLET RH	1	3
	96-920001-210	TUBE	1	3
	AN837-6D	ELBOW,FUEL BOOST PUMP	1	2
	AN815-6D	ELBOW,FUEL BOOST PUMP	1	3
	96-920015	BRACKET ASSY,AUXILIARY FUEL PUMP	1	3
- 8	4036-A	PUMP,FUEL BOOST	1	2
	4140-00-5	PUMP,FUEL BOOST	1	3
		/ATTACHING PARTS/		
- 9	AN74A11	BOLT	4	2
	AN4-11A	BOLT	4	3
- 10	100696SZH020	SPACER	4	2
	100696S-ZN025	SPACER	4	3
		----*----		
- 11	96-920001-139	TUBE ASSY,FUEL BOOST PUMP DRAIN LH	1	2
	96-920001-209	TUBE ASSY,FUEL BOOST PUMP DRAIN LH	1	3
	96-920001-140	TUBE ASSY,FUEL BOOST PUMP DRAIN RH	1	2
	96-920001-210	TUBE ASSY,FUEL BOOST PUMP DRAIN RH	1	3
	AN823-4D	ELBOW,FUEL BOOST PUMP DRAIN TUBE	1	1
	MS35489-6	GROMMET,ELASTIC /SUPERCEDES AN931-4-7/	1	1
	AN833-6D	ELBOW,FUEL BOOST PUMP	1	1
- 12	96-920001-23	TUBE ASSY,FUEL BOOST PUMP INLET LH	1	2
	96-920001-207	TUBE ASSY,FUEL BOOST PUMP INLET LH	1	3
	96-920001-24	TUBE ASSY,FUEL BOOST PUMP INLET RH	1	2
	96-920001-208	TUBE ASSY,FUEL BOOST PUMP INLET RH	1	3
	AN826-6D	TEE,FUEL STRAINER	1	2
- 13	96-920001-103	TUBE ASSY,ENGINE FUEL SUPPLY LH	1	3
	96-920001-104	TUBE ASSY,ENGINE FUEL SUPPLY RH	1	2
- 14	367-00	VALVE,ENGINE FUEL SUPPLY TUBE CHECK	1	2
		/SUPERCEDES 1111-595273/		
- 15	96-920001-133	TUBE ASSY,ENGINE FUEL SUPPLY LH	1	2
	96-920001-134	TUBE ASSY,ENGINE FUEL SUPPLY RH	1	2
- 16	G199-85	STRAINER,FUEL /SEE FIG. 57H/	1	1
		/ATTACHING PARTS/		
- 17	AN4A	BOLT	2	
	AN960-416	WASHER	2	
	AN365-428	NUT	2	
		----*----		
	AN913-1S	PLUG,PIPE	1	1
- 18	CCA4850	VALVE,FUEL STRAINER DRAIN	1	1
- 19	MS21919DG17	CLAMP,FUEL STRAINER DRAIN VALVE	1	1
		/ATTACHING PARTS/		
- 20	AN520-10	SCREW	1	
	AN960-10	WASHER	1	
	AN365-1032	NUT	1	
		----*----		

FIG. & INDEX NO.	PART NO.	DESCRIPTION 1 2 3 4 5 6 7	UNITS PER ASSY	USABLE ON CODE
57A- 21	96-920001-105	TUBE ASSY,FUEL STRAINER DRAIN	1	1
	AN823-4D	ELBOW,FUEL STRAINER	1	1
	AN822-4D	ELBOW,FUEL STRAINER DRAIN TUBE	1	1
	AN910-1D	COUPLING,FUEL STRAINER DRAIN TUBE	1	1
- 22	MS21919-10	CLAMP,SUPPORT	1	1
		/ATTACHING PARTS/		
- 23	AN515-8R	SCREW	1	
	AN960-8	WASHER	1	
	AN365-832	NUT	1	
		----*----		
	AN816-6D	NIPPLE,FUEL STRAINER	1	3
- 24	96-920001-21	TUBE ASSY,ENGINE FUEL SUPPLY LH	1	1
	96-920001-22	TUBE ASSY,ENGINE FUEL SUPPLY RH	1	1
	AN821-6D	ELBOW,ENGINE FUEL SUPPLY TUBE	1	1
	AN931B11-16	GROMMET,ELASTIC	1	1
- 25	96-920001-113	TUBE ASSY,ENGINE FUEL SUPPLY	1	1
	AN825-6D	TEE,ENGINE FUEL SUPPLY TUBE	1	1
	AN910-2D	COUPLING,FUEL DRAIN	1	1
	AN912-1D	BUSHING,FUEL DRAIN REDUCER	1	1
- 26	CCA4850	VALVE,FUEL DRAIN	1	1
- 27	96-920001-111	TUBE ASSY,ENGINE FUEL SUPPLY	1	1
	AN824-6D	TEE,ENGINE FUEL SUPPLY TUBE	1	1
- 28	96-920001-115	TUBE ASSY,ENGINE FUEL SUPPLY	1	1
- 29	96-920001-89	TUBE ASSY,ENGINE FUEL CROSS FEED SUPPLY LH	1	1
	96-920001-127	TUBE ASSY,ENGINE FUEL CROSS FEED SUPPLY RH	1	1
- 30	96-920001-47	TUBE ASSY,25 GALLON FUEL CELL SUPPLY LH	1	1
	AN783-6D	TEE,CABIN HEATER FUEL TUBE	1	1
	MS29512-6	GASKET,CABIN HEATER FUEL TUBE	1	1
	AN919-6D	REDUCER,CABIN HEATER FUEL TUBE	1	1
- 31	96-920001-59	TUBE ASSY,25 GALLON FUEL CELL SUPPLY LH	1	1
	96-920001-107	TUBE ASSY,25 GALLON FUEL CELL SUPPLY RH	1	1
- 32	45-921541	STRAINER ASSY,25 GALLON FUEL CELL	1	1
	AN737-30	CLAMP,FUEL STRAINER	1	1
- 33	50-920064	STRAINER ASSY,31 GALLON FUEL TANK	1	1
	AN737-30	CLAMP,FUEL STRAINER	1	1
- 34	96-920001-37	TUBE ASSY,31 GALLON FUEL TANK SUPPLY LH	1	1
	96-920001-38	TUBE ASSY,31 GALLON FUEL TANK SUPPLY RH	1	1
	AN815-6D	NIPPLE,31 GALLON FUEL TANK SUPPLY TUBE	1	1
- 35	96-920001-39	TUBE ASSY,31 GALLON FUEL TANK SUPPLY LH	1	1
	96-920001-40	TUBE ASSY,31 GALLON FUEL TANK SUPPLY RH	1	1
	AN832-6D	UNION,31 GALLON FUEL TANK SUPPLY TUBE	1	1
	AN924-6D	NUT,31 GALLON FUEL TANK SUPPLY TUBE	1	1
- 36	96-920001-45	TUBE ASSY,31 GALLON FUEL TANK SUPPLY LH	1	1
	96-920001-33	TUBE ASSY,31 GALLON FUEL TANK SUPPLY RH	1	1
	AN815-6D	UNION,31 GALLON FUEL TANK SUPPLY TUBE RH	1	1
	96-920001-171	TUBE ASSY,31 GALLON FUEL TANK SUPPLY RH	1	1
- 37	5640556	TRANSMITTER,LH MAIN 25 GALLON	1	1
	5641801	TRANSMITTER,RH MAIN 25 GALLON	1	1
		/ATTACHING PARTS/		
- 38	AN502-10	SCREW	5	
		----*----		
- 39	35-921503	GASKET,FUEL TRANSMITTER	1	1
- 40	5640557	TRANSMITTER,LH AUX INBD 31 GAL	1	4
	95-380013-5	TRANSMITTER,LH AUX INBD 31 GAL	1	5
	5640554	TRANSMITTER,RH AUX INBD 31 GAL	1	4
	95-380013-7	TRANSMITTER,RH AUX INBD 31 GAL	1	5
- 41	5640558	TRANSMITTER,LH AUX OUTBD 31 GAL	1	4
	95-380013-1	TRANSMITTER,LH AUX OUTBD 31 GAL	1	5
	5640555	TRANSMITTER,RH AUX OUTBD 31 GAL	1	4
	95-380013-3	TRANSMITTER,RH AUX OUTBD 31 GAL	1	5
		/ATTACHING PARTS/		
- 42	AN502-10	SCREW	5	
		----*----		
- 43	35-921503	GASKET,FUEL TRANSMITTER	1	1
- 44	FC3570-5	CAP & ADAPTER ASSY,25 GALLON FUEL CELL	1	1
		/SEE FIG. 57E/		
- 45	FC3570-4	CAP & ADAPTER ASSY,31 GALLON FUEL TANK	1	1
		/SEE FIG. 57E/		

FIG. & INDEX NO.	PART NO.	DESCRIPTION 1 2 3 4 5 6 7	UNITS PER ASSY	USABLE ON CODE
57A- 46	50-921520	• COVER,31 GALLON FUEL TANK ACCESS. . . . . /ATTACHING PARTS/	2	1
- 47	AN74-4	• BOLT.	12	
	AN960-416L	• WASHER.	12	
		----*----		
- 48	50-921521	• GASKET,31 GALLON FUEL TANK ACCESS COVER . . .	1	1
		• SYSTEM INSTL,FUEL RETURN LINE /SEE FIG. 57B/.		1
		• SYSTEM INSTL,FUEL VENT LINE /SEE FIG. 57C/. .		1

CODE	EFFECTIVITY	CODE	EFFECTIVITY
1	TD-453 THRU TD-533	2	TD-453 THRU TD-516
3	TD-517 THRU TD-533	4	TD-453 THRU TD-524
5	TD-525 THRU TD-533		

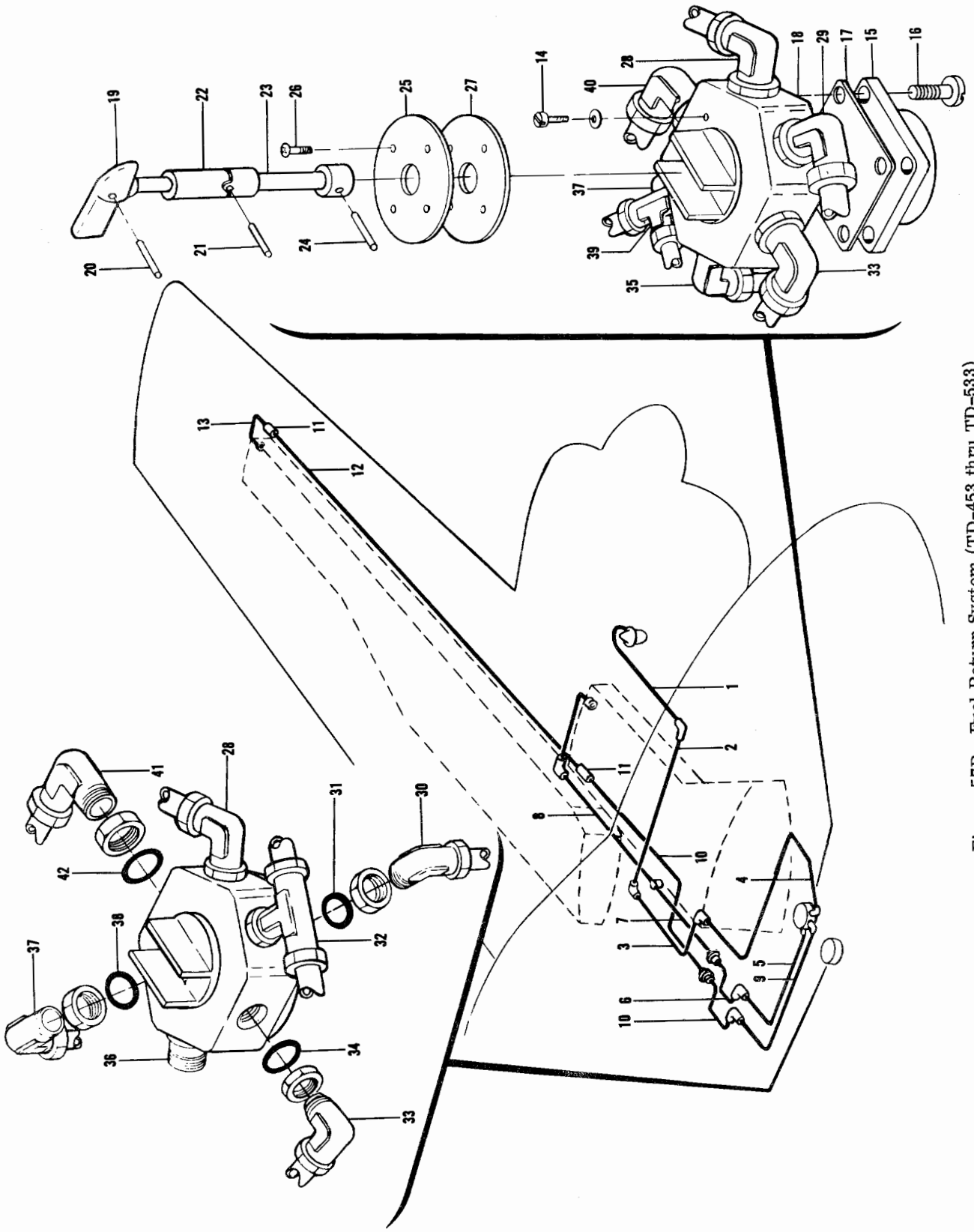

Figure 57B. Fuel Return System (TD-453 thru TD-533)

FIG. & INDEX NO.	PART NO.	DESCRIPTION 1 2 3 4 5 6 7	UNITS PER ASSY	USABLE ON CODE
57B-		SYSTEM INSTL,FUEL RETURN LINE		1
		/SEE FIG. 57A FOR NHA/		
- 1	MS28741-4-0220	HOSE ASSY,ENGINE FUEL RETURN LH	1	1
	MS28741-4-0200	HOSE ASSY,ENGINE FUEL RETURN RH	1	1
	AN833-4	ELBOW,ENGINE FUEL RETURN TUBE	1	1
	AN924-4	NUT,ENGINE FUEL RETURN TUBE	1	1
- 2	95-920005-7	TUBE ASSY,ENGINE FUEL RETURN LH	1	1
	95-920005-8	TUBE ASSY,ENGINE FUEL RETURN RH	1	1
	AN821-4D	ELBOW,ENGINE FUEL RETURN TUBE	1	1
	AN931-4-16	GROMMET,ELASTIC	1	1
- 3	96-920001-57	TUBE ASSY,ENGINE FUEL RETURN LH	1	1
	96-920001-58	TUBE ASSY,ENGINE FUEL RETURN RH	1	1
	AN821-4D	ELBOW,ENGINE FUEL RETURN TUBE	1	1
- 4	95-920005-11	TUBE ASSY,ENGINE FUEL RETURN LH	1	1
	95-920005-13	TUBE ASSY,ENGINE FUEL RETURN RH	1	1
- 5	96-920001-73	TUBE ASSY,25 GALLON FUEL CELL RETURN LH	1	1
	96-920001-131	TUBE ASSY,25 GALLON FUEL CELL RETURN RH	1	1
	AN821-4D	ELBOW,25 GALLON FUEL CELL RETURN TUBE	1	1
- 6	96-920001-153	TUBE ASSY,25 GALLON FUEL CELL RETURN LH	1	1
	96-920001-154	TUBE ASSY,25 GALLON FUEL CELL RETURN RH	1	1
	AN815-4D	UNION,25 GALLON FUEL CELL RETURN TUBE	1	1
- 7	96-920001-71	TUBE ASSY,25 GALLON FUEL CELL RETURN LH	1	1
	96-920001-72	TUBE ASSY,25 GALLON FUEL CELL RETURN RH	1	1
	AN821-4D	ELBOW,25 GALLON FUEL CELL RETURN TUBE	1	1
	AN931-4-12	GROMMET,ELASTIC	1	1
- 8	96-920001-69	TUBE ASSY,25 GALLON FUEL CELL RETURN LH	1	1
	96-920001-70	TUBE ASSY,25 GALLON FUEL CELL RETURN RH	1	1
	MS35489-6	GROMMET,ELASTIC /SUPERCEDES AN931-4-7/	1	1
- 9	96-920001-77	TUBE ASSY,31 GALLON FUEL CELL RETURN LH	1	1
	96-920001-35	TUBE ASSY,31 GALLON FUEL CELL RETURN RH	1	1
	AN821-4D	ELBOW,31 GALLON FUEL CELL RETURN TUBE	1	1
- 10	96-920001-185	TUBE ASSY,31 GALLON FUEL CELL RETURN LH	1	1
	96-920001-186	TUBE ASSY,31 GALLON FUEL CELL RETURN RH	1	1
	AN931-4-12	GROMMET,ELASTIC	1	1
- 11	106200H4	HOSE,31 GALLON FUEL CELL RETURN TUBE	2	1
		/ORDER 1/4 ID MIL6000,SPECIFY LENGTH/		
	MS35489-6	GROMMET,ELASTIC /SUPERCEDES AN931-4-7/	9	1
- 12	96-920001-187	TUBE ASSY,31 GALLON FUEL CELL RETURN	1	1
- 13	96-920001-183	TUBE ASSY,31 GALLON FUEL CELL RETURN	1	1
	96-920001-49	VALVE ASSY,FUEL SELECTOR LH	1	1
	96-920001-50	VALVE ASSY,FUEL SELECTOR RH	1	1
		/ATTACHING PARTS/		
- 14	AN500A416	SCREW	3	
	AN936A416	WASHER	3	
		----*----		
- 15	95-924014-5	BASE,FUEL SELECTOR VALVE	1	2
		/ATTACHING PARTS/		
- 16	AN500A10-10	SCREW	4	
	AN935-10	WASHER	4	
		----*----		
- 17	50-920030-4	GASKET,FUEL SELECTOR VALVE	1	1
- 18	HE-825-2	VALVE,FUEL SELECTOR LH /SEE FIG. 57F/	1	1
	HE-825-1	VALVE,FUEL SELECTOR RH /SEE FIG. 57F/	1	1
- 19	96-924010	HANDLE,FUEL SELECTOR VALVE	1	1
		/ATTACHING PARTS/		
- 20	52-028-125-0625	PIN	1	
		----*----		
- 21	52-028-125-0500	PIN	2	1
- 22	AN27088	JOINT,FUEL SELECTOR UNIVERSAL	1	1
- 23	96-920001-79	TUBE,FUEL SELECTOR	1	1
- 24	A905	PIN	1	1
		/ATTACHING PARTS/		
	AN380-1-1	PIN,COTTER	1	
		----*----		
- 25	96-920001-125	PLATE,FUEL SELECTOR BACK	1	1
		/ATTACHING PARTS/		
- 26	AN507-832R	SCREW	4	
		----*----		

FIG. & INDEX NO.	PART NO.	DESCRIPTION 1 2 3 4 5 6 7	UNITS PER ASSY	USABLE ON CODE
57B-	95-924015-5	PLATE ASSY,FUEL SELECTOR IDENTIFICATION LH	1	1
	95-924015-6	PLATE ASSY,FUEL SELECTOR IDENTIFICATION RH	1	1
- 27	95-924015-3	PLATE,FUEL SELECTOR IDENTIFICATION	1	1
	95-924020-1	PLACARD,FUEL SELECTOR IDENTIFICATION LH	1	1
	95-924020	PLACARD,FUEL SELECTOR IDENTIFICATION RH	1	1
- 28	6C5X-D	ELBOW,25 GALLON FUEL CELL SUPPLY TUBE	1	1
- 29	6C5X-D	ELBOW,CROSS FEED FUEL SUPPLY TUBE LH	1	1
- 30	AN833-4D	ELBOW,CROSS FEED FUEL SUPPLY TUBE RH	1	1
- 31	MS29512-4	GASKET,CROSS FEED FUEL SUPPLY TUBE RH	1	1
	AN924-4D	NUT,CROSS FEED SUPPLY TUBE RH	1	1
- 32	AN834-4D	TEE,ENGINE FUEL RETURN TUBE RH	1	1
- 33	AN833-4D	ELBOW,31 GALLON FUEL TANK RETURN TUBE	1	1
- 34	MS29512-4	GASKET,31 GALLON FUEL TANK RETURN TUBE	1	1
	AN924-4D	NUT,31 GALLON FUEL TANK RETURN TUBE	1	1
- 35	AN837-4D	ELBOW,25 GALLON FUEL CELL RETURN TUBE LH	1	1
- 36	AN832-4D	UNION,25 GALLON FUEL CELL RETURN TUBE RH	1	1
- 37	AN833-6D	ELBOW,CROSS FEED FUEL RETURN TUBE	1	1
- 38	MS29512-6	GASKET,CROSS FEED FUEL RETURN TUBE	1	1
	AN924-6D	NUT,CROSS FEED FUEL RETURN TUBE	1	1
- 39	AN804-4D	TEE,ENGINE FUEL RETURN TUBE LH	1	1
- 40	6C5X-D	ELBOW,31 GALLON FUEL TANK RETURN TUBE LH	1	1
- 41	AN833-6D	ELBOW,31 GALLON FUEL TANK RETURN TUBE RH	1	1
- 42	MS29512-6	GASKET,31 GALLON FUEL TANK RETURN TUBE RH	1	1
	AN924-6D	NUT,31 GALLON FUEL TANK RETURN TUBE RH	1	1

CODE EFFECTIVITY

1 TD-453 THRU TD-533

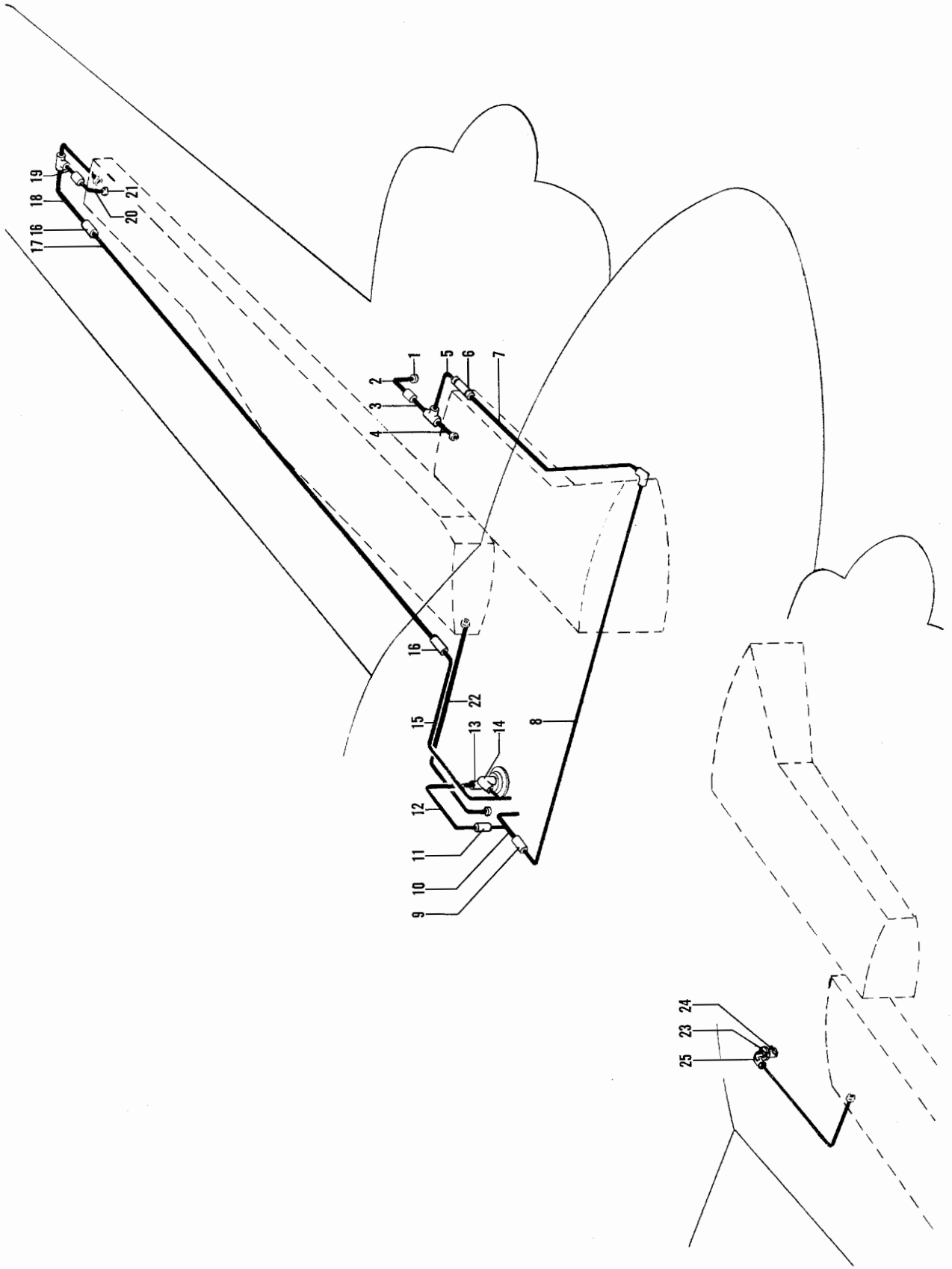

Figure 57C. Fuel Vent System (TD-453 thru TD-533)

FIG. & INDEX NO.	PART NO.	DESCRIPTION 1 2 3 4 5 6 7	UNITS PER ASSY	USABLE ON CODE
57C-		SYSTEM INSTL,FUEL VENT LINE . . . . . /SEE FIG. 57A FOR NHA/		1
- 1	106200H4	. HOSE,25 GALLON FUEL CELL VENT . . . . . /ORDER 1/4 ID MIL6000,SPECIFY LENGTH/	1	1
- 2	96-920001-5	. TUBE ASSY,25 GALLON FUEL CELL VENT LH	1	1
	96-920001-101	. TUBE ASSY,25 GALLON FUEL CELL VENT RH	1	1
- 3	96-920001-3	. TUBE ASSY,25 GALLON FUEL CELL VENT.	1	1
	AN824-4D	. TEE,25 GALLON FUEL CELL VENT TUBE	1	1
- 4	96-920001-1	. TUBE ASSY,25 GALLON FUEL CELL VENT.	1	1
- 5	96-920001-63	. TUBE ASSY,25 GALLON FUEL CELL VENT.	1	1
- 6	106200H4	. HOSE,25 GALLON FUEL CELL VENT . . . . . /ORDER 1/4 ID MIL6000,SPECIFY LENGTH/	1	1
- 7	96-920001-7	. TUBE ASSY,25 GALLON FUEL CELL VENT LH	1	1
	96-920001-8	. TUBE ASSY,25 GALLON FUEL CELL VENT RH	1	1
	AN931A4-7	. GROMMET,ELASTIC	1	1
	MS35489-6	. GROMMET,ELASTIC /SUPERCEDES AN931-4-7/. . . .	1	1
	AN821-4D	. ELBOW,25 GALLON FUEL CELL VENT TUBE	1	1
- 8	96-920001-95	. TUBE ASSY,25 GALLON FUEL CELL VENT LH	1	1
	96-920001-96	. TUBE ASSY,25 GALLON FUEL CELL VENT RH	1	1
- 9	106200H4-15	. HOSE,25 GALLON FUEL CELL VENT TUBE. . . . . /ORDER 1/4 ID MIL6000 X 3 3/4 IN./	1	1
- 10	96-920001-175	. WELD ASSY,25 GALLON FUEL CELL VENT TUBE LH. .	1	1
	96-920001-176	. WELD ASSY,25 GALLON FUEL CELL VENT TUBE RH. .	1	1
- 11	106200H6-15	. HOSE,25 GALLON FUEL CELL VENT TUBE. . . . . /ORDER 3/8 ID MIL6000 X 3 3/4 IN./	1	1
- 12	96-920001-81	. TUBE ASSY,31 GALLON FUEL TANK VENT LH	1	1
	96-920001-82	. TUBE ASSY,31 GALLON FUEL TANK VENT RH	1	1
- 13	106200H6-15	. HOSE,31 GALLON FUEL TANK VENT TUBE. . . . . /ORDER 3/8 ID MIL6000 X 3 3/4 IN./	1	1
- 14	106200H6	. HOSE,31 GALLON FUEL TANK VENT TUBE. . . . . /ORDER 3/8 ID MIL6000,SPECIFY LENGTH/	1	1
- 15	96-920001-99	. TUBE ASSY,31 GALLON FUEL TANK VENT LH	1	1
	96-920001-100	. TUBE ASSY,31 GALLON FUEL TANK VENT RH	1	1
- 16	106200H4	. HOSE,31 GALLON FUEL TANK VENT TUBE. . . . . /ORDER 1/4 ID MIL6000,SPECIFY LENGTH/	2	1
- 17	96-920001-97	. TUBE ASSY,31 GALLON FUEL TANK VENT.	1	1
- 18	96-920001-11	. TUBE ASSY,31 GALLON FUEL TANK VENT LH	1	1
	AN824-4D	. TEE,31 GALLON FUEL TANK VENT TUBE	1	1
- 19	96-920001-13	. TUBE ASSY,31 GALLON FUEL TANK VENT LH	1	1
	96-920001-14	. TUBE ASSY,31 GALLON FUEL TANK VENT RH	1	1
- 20	96-920001-15	. TUBE ASSY,31 GALLON FUEL TANK VENT LH	1	1
	96-920001-16	. TUBE ASSY,31 GALLON FUEL TANK VENT RH	1	1
- 21	106200H4	. HOSE,31 GALLON FUEL TANK VENT . . . . . /ORDER 1/4 ID MIL6000,SPECIFY LENGTH/	1	1
- 22	96-920001-87	. TUBE ASSY,31 GALLON FUEL TANK DRAIN LH. . . .	1	1
	96-920001-88	. TUBE ASSY,31 GALLON FUEL TANK DRAIN RH. . . .	1	1
- 23	AN910-1D	. COUPLING,31 GALLON FUEL TANK DRAIN TUBE . . .	1	1
- 24	CCA4850	. VALVE,31 GALLON FUEL TANK DRAIN	1	1
- 25	AN822-4D	. ELBOW,31 GALLON FUEL TANK DRAIN TUBE.	1	1

CODE EFFECTIVITY

1 TD-453 THRU TD-533

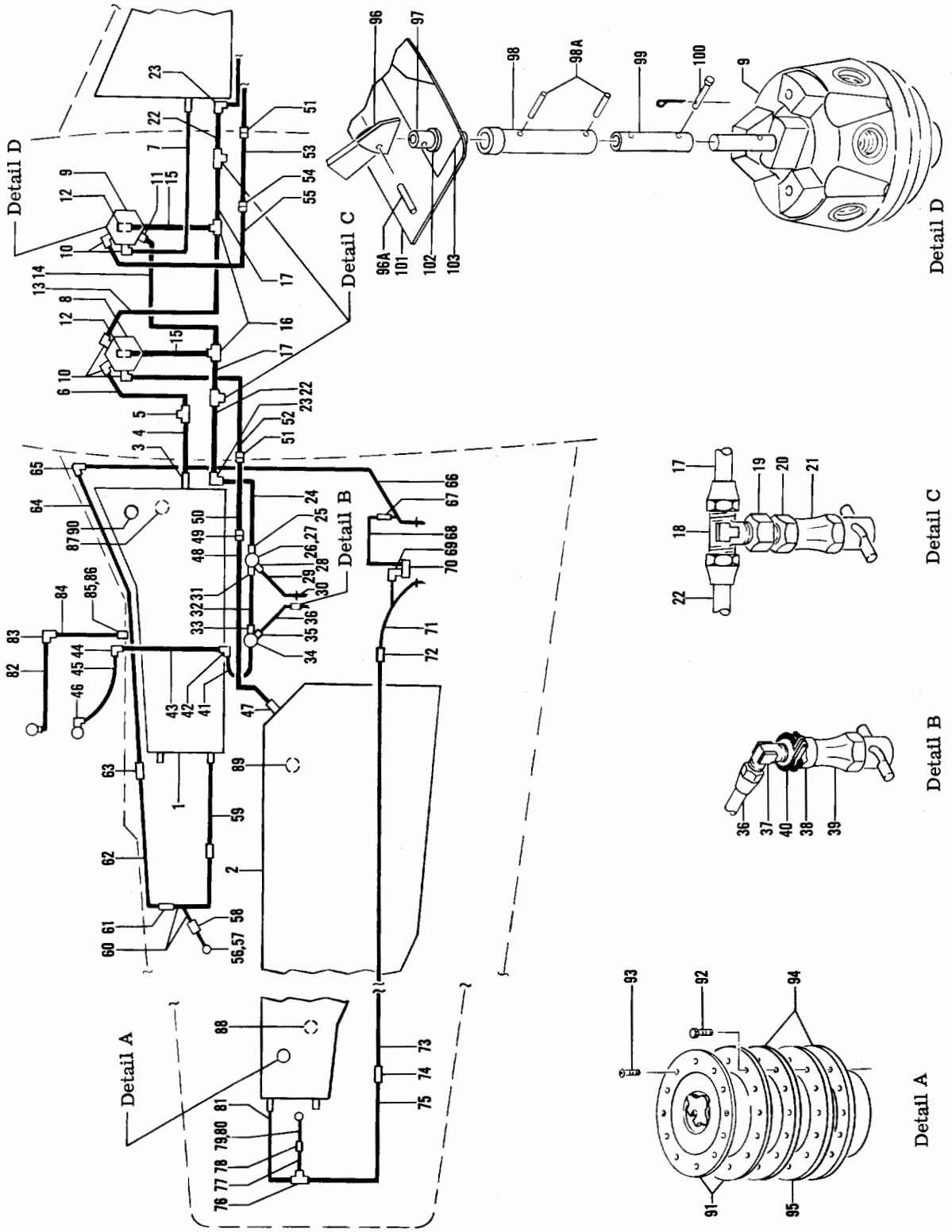

Figure 57D. Fuel System (TD-534 & After)

FIG. & INDEX NO.	PART NO.	DESCRIPTION 1 2 3 4 5 6 7	UNITS PER ASSY	USABLE ON CODE
57D-	95-920006-1	FUEL SYSTEM INSTL,80 GAL. /STANDARD/.	NP	1
	95-920006-3	FUEL SYSTEM INSTL,114 GAL. /OPTIONAL/	NP	1
	95-920006-11	FUEL SYSTEM INSTL,112 GAL. /OPTIONAL/	NP	1
- 1	¤95-380027-1	. TANK ASSY,25 GALLON MAIN LH . . . . . /SUPERSEDES 50-920008-7 AND -9/	1	1
	¤95-380027-2	. TANK ASSY,25 GALLON MAIN RH . . . . . /SUPERSEDES 50-920008-8 AND -10/	1	1
- 2	¤95-920011-7	. TANK ASSY,31 GALLON AUX LH. . . . . /SUPERSEDES 95-920011-5/	1	2
	¤95-920011-8	. TANK ASSY,31 GALLON AUX RH. . . . . /SUPERSEDES 95-920011-6/	1	2
	¤35-921242-6	. TANK ASSY,40 GALLON RH.	1	1
	¤35-921242-5	. TANK ASSY,40 GALLON LH.	1	1
	95-380015-2	. TANK ASSY,17 GALLON RH.	1	2
	95-380015-1	. TANK ASSY,17 GALLON LH.	1	2
	95-380015-4	. GANK ASSY,17 GALLON RH.	1	3
	¤95-380015-3	. TANK ASSY,17 GALLON LH.	1	3
- 3	45-921541	. STRAINER ASSY,FUEL TANK OUTLET.	2	1
	¤AN737RM30	. CLAMP,FUEL STRAINER	2	1
	MS35489	. GROMMET	2	1
- 4	96-920001-47	. TUBE ASSY,FUEL SUPPLY LH.	1	1
- 5	AN783-6D	. TEE	1	1
	¤AN919-6D	. REDUCER,HEATER FUEL LINE.	1	1
	MS29512-6	. GASKET,HEATER FUEL LINE	1	1
- 6	96-920001-59	. TUBE ASSY,FUEL SUPPLY LH.	1	1
- 7	96-920001-107	. TUBE ASSY,FUEL SUPPLY RH.	1	1
- 8	HE-765-1	. VALVE,FUEL SELECTOR LH /SEE FIG. 57G/	1	1
- 9	HE-765-2	. VALVE,FUEL SELECTOR RH /SEE FIG. 57G/	1	1
- 10	¤6C5XD	. ELBOW	5	1
- 11	¤AN833-6D	. ELBOW	1	1
	¤AN924-6D	. NUT	1	1
	¤MS29512-06	. GASKET.	1	1
- 12	¤AN822-6D	. ELBOW	2	1
- 13	96-920001-127	. TUBE ASSY,CROSS FEED LEFT TO RIGHT.	1	1
- 14	96-920001-89	. TUBE ASSY,CROSS FEED RIGHT TO LEFT.	1	1
- 15	96-920001-115	. TUBE ASSY,FUEL SUPPLY LH & RH	2	1
- 16	¤AN824-6D	. TEE	2	1
- 17	96-920001-111	. TUBE ASSY,FUEL SUPPLY LH & RH	2	1
- 18	¤AN825-6D	. TEE	2	1
- 19	¤AN910-2D	. COUPLING.	2	1
- 20	¤AN912-1D	. BUSHING	2	1
- 21	¤CCA4850	. VALVE,MAIN TANK FUEL DRAIN.	2	1
- 22	96-920001-113	. TUBE ASSY,FUEL SUPPLY	2	1
- 23	¤AN833-6D	. ELBOW	2	1
	¤AN960-916	. WASHER.	2	1
	¤AN924-6D	. NUT	2	1
- 24	96-920001-213	. TUBE ASSY,FUEL SUPPLY LH.	1	1
	96-920001-214	. TUBE ASSY,FUEL SUPPLY RH.	1	1
- 25	¤AN815-6D	. UNION	2	1
	¤MS29512-06	. GASKET.	2	1
- 26	4140-00	. PUMP,FUEL BOOST LH & RH . . . . . /ATTACHING PARTS/	2	1
- 27	AN737TW91	. CLAMP	2	
		----*----		
	AN931D1	. PLUG,FUEL PUMP.	2	1
- 28	2140-54	. ELBOW	2	1
- 29	95-920006-7	. HOSE.	2	1
- 30	¤96-920001-229	. TUBE.	2	1
	¤MS35489-12	. GROMMET	2	1
- 31	¤AN833-6D	. ELBOW	2	1
	¤AN924-6D	. NUT	2	1
	MS29512-6	. GASKET.	2	1
- 32	96-920001-215	. TUBE ASSY,FUEL SUPPLY LH.	1	1
	96-920001-216	. TUBE ASSY,FUEL SUPPLY RH.	1	1
- 33	¤AN816-6D	. NIPPLE,FUEL STRAINER.	4	1
- 34	¤HE-760-5	. STRAINER,FUEL /SEE FIG. 57I/.	2	1

FIG. & INDEX NO.	PART NO.	DESCRIPTION 1 2 3 4 5 6 7	UNITS PER ASSY	USABLE ON CODE
57D-	G-199-105	STRAINER,FUEL /ALTERNATE FOR HE-760-5/ /SEE FIG. 57H/ /ATTACHING PARTS/	2	1
	AN4A	BOLT	2	
	¤AN960-416	WASHER	2	
	¤MS20365-428	NUT	2	
		----*----		
- 35	AN823-4D	ELBOW	2	1
- 36	96-920001-235	TUBE ASSY,FUEL STRAINER DRAIN	2	1
- 37	MS20822-4D	ELBOW	2	1
- 38	¤AN910-1D	COUPLING	2	1
- 39	¤CCA4850	VALVE,FUEL STRAINER DRAIN /ATTACHING PARTS/	2	1
- 40	MS21919-10	CLAMP	1	
	AN515-8R	SCREW	1	
	¤AN960-8	WASHER	1	
	¤MS20365-832	NUT	1	
		----*----		
- 41	95-920006-5	TUBE ASSY,FUEL SUPPLY LH & RH	2	1
- 42	¤AN821-6D	ELBOW	2	1
- 43	95-920005-9	TUBE ASSY,FUEL SUPPLY LH	1	1
	95-920005-10	TUBE ASSY,FUEL SUPPLY RH	1	1
- 44	AN833-6	ELBOW,FIREWALL FUEL SUPPLY LH & RH	2	1
	¤AN960-916	WASHER	2	1
	¤AN924-6	NUT	2	1
- 45	MS28741-6-0204	HOSE ASSY,FIREWALL TO FUEL PUMP LH & RH	2	1
- 46	95-920006-13	FITTING,FUEL PUMP ELBOW LH & RH	2	1
- 47	50-920064	STRAINER,AUXILIARY FUEL TANK SUPPLY	2	1
	¤AN737RM30	CLAMP,FUEL STRAINER	2	1
- 48	96-920001-257	TUBE ASSY,AUXILIARY FUEL SUPPLY LH	1	1
	96-920001-259	TUBE ASSY,AUXILIARY FUEL SUPPLY RH	1	1
- 49	¤AN815-6D	UNION	2	1
- 50	96-920001-253	TUBE ASSY,AUXILIARY FUEL SUPPLY LH	1	1
	96-920001-255	TUBE ASSY,AUXILIARY FUEL SUPPLY RH	1	1
- 51	¤AN832-6D	UNION	2	1
	AN960D916	WASHER	2	1
	¤AN924-6D	NUT	2	1
- 52	96-920001-45	TUBE ASSY,AUXILIARY FUEL SUPPLY LH	1	1
- 53	96-920001-33	TUBE ASSY,AUXILIARY FUEL SUPPLY RH	1	1
- 54	¤AN815-6D	UNION	1	1
- 55	96-920001-171	TUBE ASSY,AUXILIARY FUEL SUPPLY RH	1	1
- 56	35-921154-101	TUBE,VENT	2	1
- 57	106200H4-15	HOSE,VENT /ORDER 1/4 ID MIL6000 X 3 3/4 IN./	2	1
	¤AN737RM22	CLAMP	4	1
- 58	¤366-00	VALVE,CHECK /SUPERSEDES 1111-595272/	2	1
- 59	95-920006-9	TUBE,VENT	2	1
- 60	35-921154-99	WELD ASSY,VENT TUBE LH	1	1
	35-921154-100	WELD ASSY,VENT TUBE RH	1	1
- 61	106200H4	HOSE /ORDER 1/4 ID MIL6000,SPECIFY LENGTH/	2	1
	¤AN737RM22	CLAMP	8	1
- 62	96-920001-163	TUBE,VENT	2	1
- 63	106200H4	HOSE /ORDER 1/4 ID MIL6000,SPECIFY LENGTH/	2	1
	¤AN737RM22	CLAMP	4	1
- 64	96-920001-177	TUBE ASSY,VENT LH	1	1
	96-920001-178	TUBE ASSY,VENT RH	1	1
- 65	¤AN821-4D	ELBOW	2	1
- 66	96-920001-175	TUBE ASSY,VENT LH	1	1
	96-920001-176	TUBE ASSY,VENT RH	1	1
	MS35489-6	GROMMET	8	1
- 67	106200H6-15	HOSE /ORDER 3/8 ID MIL6000 X 3 3/4 IN./	4	1
- 68	96-920001-81	TUBE,VENT LH	1	1
	96-920001-82	TUBE,VENT RH	1	1
- 69	106200H6	HOSE /ORDER 3/8 ID MIL6000,SPECIFY LENGTH/	2	1
	¤AN737RM22	CLAMP	6	1
- 70	414-920022-1	VENT ASSY	2	1
- 71	96-920001-61	TUBE ASSY,VENT LH	1	1
	96-920001-62	TUBE ASSY,VENT RH	1	1

FIG. & INDEX NO.	PART NO.	DESCRIPTION 1 2 3 4 5 6 7	UNITS PER ASSY	USABLE ON CODE
57D- 72	106200H4	HOSE /ORDER 1/4 ID MIL6000,SPECIFY LENGTH/	2	1
	¤AN737RM22	CLAMP	4	1
- 73	96-920001-97	TUBE,VENT	2	1
- 74	106200H4	HOSE /ORDER 1/4 ID MIL6000,SPECIFY LENGTH/	2	1
	¤AN737RM22	CLAMP	4	1
- 75	96-920001-11	TUBE ASSY,VENT LH	1	1
	96-920001-12	TUBE ASSY,VENT RH	1	1
- 76	¤AN824-4D	TEE	2	1
- 77	96-920001-13	TUBE ASSY,VENT LH	1	1
	96-920001-14	TUBE ASSY,VENT RH	1	1
- 78	¤366-00	VALVE,VENT CHECK /SUPERSEDES 1111-595272/	2	1
- 79	96-920001-243	TUBE ASSY,VENT LH	1	1
	96-920001-244	TUBE ASSY,VENT RH	1	1
- 80	106200H4	HOSE /ORDER 1/4 ID MIL6000,SPECIFY LENGTH/	2	1
	¤AN737RM22	CLAMP	4	1
- 81	96-920001-9	TUBE ASSY,VENT LH	1	1
	96-920001-10	TUBE ASSY,VENT RH	1	1
	106200H4	HOSE /ORDER 1/4 ID MIL6000,SPECIFY LENGTH/	2	1
	¤AN737RM22	CLAMP	4	1
- 82	MS28741-3-0122	HOSE ASSY,FUEL PRESSURE LH	1	1
	95-920020-1	HOSE ASSY,FUEL PRESSURE RH	1	1
- 83	AN833-3	ELBOW,LH	1	1
	AN837-3	ELBOW,RH	1	1
	¤AN960-616L	WASHER	2	1
	AN924-3	NUT	2	1
- 84	MS28741-3	HOSE ASSY,FUEL PRESSURE LH & RH	2	1
- 85	AN894D3-2	BUSHING	2	1
	¤MS25912-3	GASKET	2	1
- 86	AN832-3	UNION	2	1
	¤AN960-616L	WASHER	2	1
	AN924-3	NUT	2	1
- 87	¤5640556	TRANSMITTER,LH MAIN 25 GALLON	1	1
	GG5642808	TRANSMITTER,LH MAIN 40 GALLON	1	1
	¤5641801	TRANSMITTER,RH MAIN 25 GALLON	1	1
	GG5642809	TRANSMITTER,RH MAIN 40 GALLON	1	1
- 88	¤95-380013-1	TRANSMITTER,LH AUX OUTBD 31 GALLON	1	1
	¤95-380012-7	TRANSMITTER,LH AUX OUTBD 17 GALLON /SUPERSEDES 95-380012-3/	1	1
	¤95-380013-3	TRANSMITTER,RH AUX OUTBD 31 GALLON	1	1
	¤95-380012-7	TRANSMITTER,RH AUX OUTBD 17 GALLON /SUPERSEDES 95-380012-3/	1	1
- 89	¤95-380013-5	TRANSMITTER,LH AUX INBD 31 GALLON	1	1
	¤95-380012-5	TRANSMITTER,LH AUX INBD 17 GALLON /SUPERSEDES 95-380012-1/	1	1
	¤95-380013-7	TRANSMITTER,RH AUX INBD 31 GALLON	1	1
	¤95-380012-5	TRANSMITTER,RH AUX INBD 17 GALLON /SUPERSEDES 95-380012-1/	1	1
- 90	FC3570-5	FUEL CAP & ADAPTER ASSY,25 GALLON /SEE FIG. 57E/	2	1
- 91	FC3570-4	FUEL CAP & ADAPTER ASSY,31 GALLON /SEE FIG. 57E/	2	1
	¤96-380035	FUEL CAP,40 GALLON	2	1
	96-380036-3	ADAPTER ASSY,40 GALLON /ATTACHING PARTS/	2	1
- 92	¤AN74-3/M/	BOLT	12	
	¤AN960-416L	WASHER	12	
- 93	AN509-1032R9	SCREW	12	
		----*----		
- 94	¤35-921502	GASKET /2 REQD ON 25 GALLON AND 40 GALLON, 4 REQD ON 31 GALLON TANK/	6	1
- 95	95-920019-3	TUBE ASSY /USE ON 31 GALLON TANK ONLY/	2	1
- 96	95-924026	HANDLE,FUEL SELECTOR VALVE /ATTACHING PARTS/	2	1
- 96A	¤52-028-125-0625	PIN	1	
		----*----		
- 97	96-920001-191	SHAFT	2	1

FIG. & INDEX NO.	PART NO.	DESCRIPTION 1 2 3 4 5 6 7	UNITS PER ASSY	USABLE ON CODE
57D- 98	96-920001-189	. JOINT,UNIVERSAL	2	1
		/ATTACHING PARTS/		
- 98A	¤52-028-125-0500	. PIN	2	
		----*----		
- 99	96-920001-79	. SHAFT	2	1
		/ATTACHING PARTS/		
-100	¤A905	. PIN	1	
	MS24665-3	. PIN,COTTER.	1	
		----*----		
	96-920011-5	. PANEL ASSY,FUEL SELECTOR VALVE /80 GALLON/. .	1	1
	96-920011-13	. PANEL ASSY,FUEL SELECTOR VALVE /114 GALLON/ .	1	1
	96-920011-7	. PANEL ASSY,FUEL SELECTOR VALVE /112 GALLON/ .	1	1
	¤A8970-1-327	. LIGHT,POST.	2	2
	A897081-327	. LIGHT,POST.	2	3
-101	96-920011-11	. . PLATE,FUEL SELECTOR VALVE	1	1
-102	FF-520-15	. . BEARING,FUEL SELECTOR VALVE	2	1
-103	95-924027	. . PLACARD,FUEL SELECTOR /80 GALLON/	1	1
	95-924027-3	. . PLACARD,FUEL SELECTOR /114 GALLON/.	1	1
	95-924027-1	. . PLACARD,FUEL SELECTOR /112 GALLON/.	1	1

CODE	EFFECTIVITY	CODE	EFFECTIVITY
1	TD-534 AND AFTER	2	TD-534 THRU TD-576
3	TD-577 AND AFTER		

BLANK PAGE

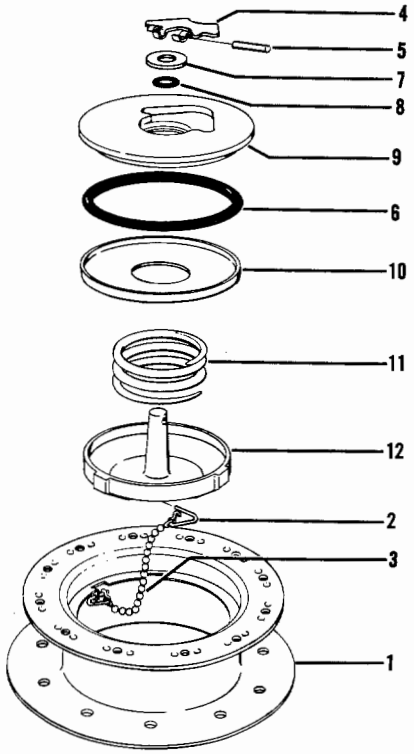

Figure 57E. Fuel Cap & Adapter (TD-453 & after)

FIG. & INDEX NO.	PART NO.	DESCRIPTION 1 2 3 4 5 6 7	UNITS PER ASSY	USABLE ON CODE
57E-	FC3570-5	CAP & ADAPTER ASSY,25 GALLON FUEL CELL. . . . . /SEE FIG. 57A & 57D FOR NHA/	2	1
	FC3570-4	CAP & ADAPTER ASSY,31 GALLON FUEL TANK. . . . . /SEE FIG. 57A & 57D FOR NHA/	2	1
	37826	. ADAPTER ASSY,25 GALLON FUEL CELL.	1	1
- 1	37825	. ADAPTER ASSY,31 GALLON FUEL TANK.	1	1
	37810-1	. CAP ASSY,25 & 31 GALLON FUEL CELL	1	1
- 2	MS29523-1	. . HOOK,25 & 31 GALLON FUEL CELL CAP	2	1
- 3	3519-12	. . CHAIN,25 & 31 GALLON FUEL CELL CAP.	1	1
- 4	37904	. . HANDLE,25 & 31 GALLON FUEL CELL CAP . . . . /ATTACHING PARTS/	1	1
- 5	37059	. . PIN,25 & 31 GALLON FUEL CELL CAP HANDLE . . ----*----	1	1
- 6	37615-339	. . RING,25 & 31 GALLON FUEL CELL CAP O	1	1
- 7	37117	. . PLATE,25 & 31 GALLON FUEL CELL CAP BEARING.	1	1
- 8	MS9021-110	. . RING,25 & 31 GALLON FUEL CELL CAP O . . . . /SUPERCEDES 37615-110/	1	1
- 9	37685-2	. . BASE,25 & 31 GALLON FUEL CELL CAP	1	1
- 10	37691	. . RETAINER,25 & 31 GALLON FUEL CELL CAP . . .	1	1
- 11	37693	. . SPRING,25 & 31 GALLON FUEL CELL CAP	1	1
- 12	38038	. . LOCK,25 & 31 GALLON FUEL CELL CAP . . . . . /SUPERCEDES 37690/	1	1

CODE EFFECTIVITY

1 TD-453 AND AFTER

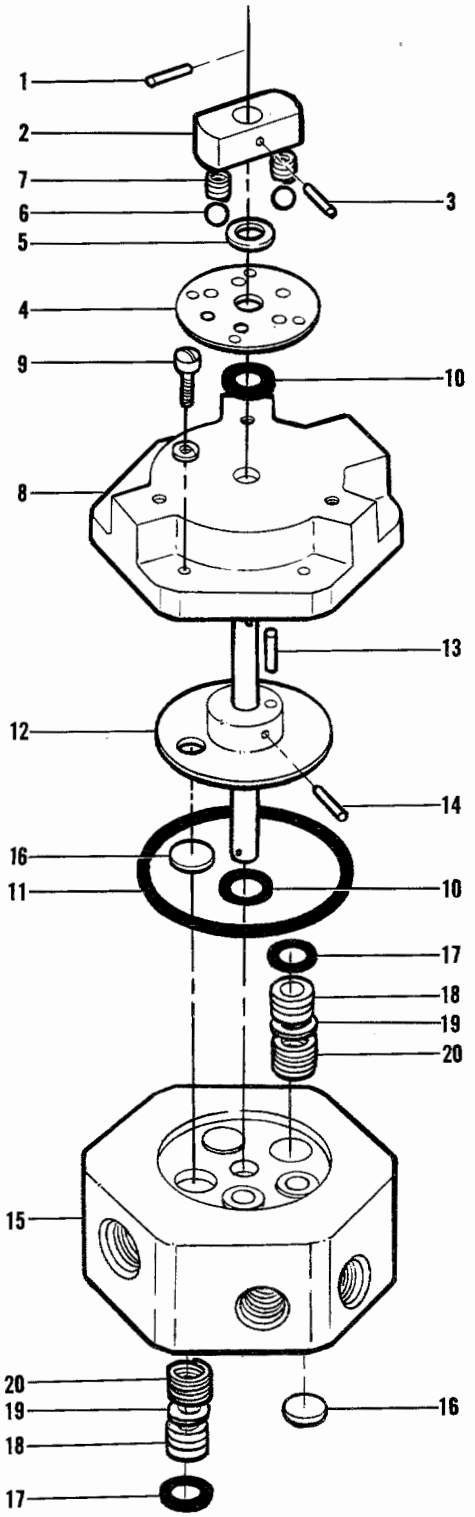

Figure 57F. Fuel Selector Valve (TD-453 thru TD-533)

FIG. & INDEX NO.	PART NO.	DESCRIPTION 1 2 3 4 5 6 7	UNITS PER ASSY	USABLE ON CODE
57F-	HE-825-2	VALVE,FUEL SELECTOR LH /SEE FIG. 57B FOR NHA/ .	1	1
	HE-825-1	VALVE,FUEL SELECTOR RH /SEE FIG. 57B FOR NHA/ .	1	1
- 1	79-022-094-0375	. PIN,FUEL SELECTOR VALVE ROTOR	1	1
- 2	HE-1114	. YOKE,FUEL SELECTOR VALVE.	1	1
		/ATTACHING PARTS/		
- 3	NO NUMBER	. ROD,DRILL /.093 X 7-16/	1	
		----*----		
- 4	HE-1116	. PLATE,FUEL SELECTOR VALVE DETENT.	1	1
- 5	HE-184	. SHIM,FUEL SELECTOR VALVE.	1	1
- 6	NO NUMBER	. BALL,STEEL /1-4 INCH/	2	1
- 7	HE-189	. SPRING,FUEL SELECTOR VALVE.	2	1
- 8	HE-1117	. COVER,FUEL SELECTOR VALVE	1	1
		/ATTACHING PARTS/		
- 9	AN500-8-10	. SCREW	6	
	AN935-8L	. WASHER,LOCK	6	
		----*----		
- 10	MS29513-10	. RING,FUEL SELECTOR VALVE O.	2	1
- 11	MS29513-136	. RING,FUEL SELECTOR VALVE O.	1	1
	HE-1155	. ROTOR ASSY,FUEL SELECTOR VALVE.	1	1
- 12	HE-1156	. . ROTOR,FUEL SELECTOR VALVE	1	1
		/ATTACHING PARTS/		
- 13	NO NUMBER	. . ROD,DRILL /.093 X 3-8/.	1	
- 14	NO NUMBER	. . ROD,DRILL /.093 X .750/	1	
		----*----		
- 15	HE-1115	. BODY,FUEL SELECTOR VALVE.	1	1
- 16	HE-1153-2	. PLUG,FUEL SELECTOR VALVE COUNTERBALANCE . . .	4	1
- 17	MS29513-12	. RING,FUEL SELECTOR VALVE O.	6	1
- 18	HE-192	. SEAL,FUEL SELECTOR VALVE.	6	1
- 19	HE-193	. WASHER,FUEL SELECTOR VALVE.	6	1
- 20	HE-191	. SPRING,FUEL SELECTOR VALVE.	6	1

CODE EFFECTIVITY

1 TD-453 THRU TD-533

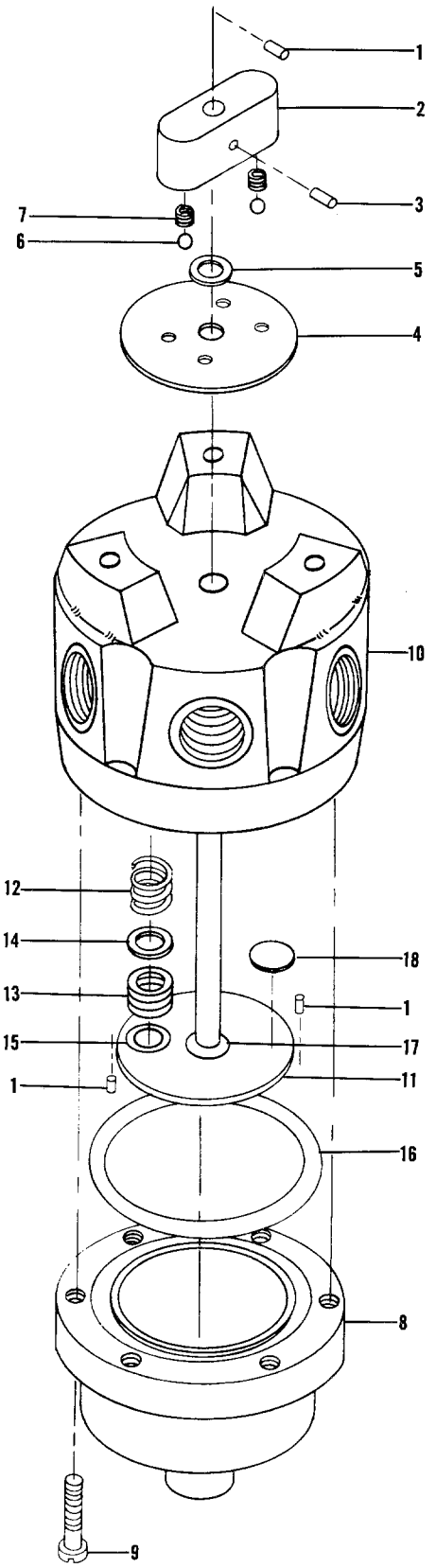

Figure 57G. Fuel Selector Valve (TD-534 & After)

FIG. & INDEX NO.	PART NO.	DESCRIPTION 1 2 3 4 5 6 7	UNITS PER ASSY	USABLE ON CODE
57G-	HE-765-1	VALVE ASSY,FUEL SELECTOR /SEE FIG. 57D FOR NHA/	1	1
	HE-765-2	VALVE ASSY,FUEL SELECTOR /SEE FIG. 57D FOR NHA/	1	1
- 1	79-022-094-375	. PIN	3	1
- 2	HE-1114	. YOKE.	1	1
		/ATTACHING PARTS/		
- 3	79-022-094-375	. PIN	1	
		----*----		
- 4	HE-1116	. PLATE,DETENT.	1	1
- 5	HE-194	. WASHER.	1	1
- 6	NO NUMBER	. BALL,STEEL /1/4 INCH/	2	1
- 7	HE-189	. SPRING.	2	1
- 8	HE-1650	. SUMP.	1	1
		/ATTACHING PARTS/		
- 9	AN500-10-8	. SCREW	6	
	AN935-10	. WASHER,LOCK	6	
		----*----		
- 10	HE-1661	. BODY.	1	1
- 11	HE-1155-10	. ROTOR ASSY.	1	1
- 12	HE-191	. SPRING.	3	1
- 13	HE-192	. SEAL.	3	1
- 14	HE-193	. WASHER.	3	1
- 15	MS29513-12	. O-RING.	1	1
- 16	5427-126	. O-RING.	1	1
- 17	MS29513-10	. O-RING.	1	1
- 18	HE-1153-2	. PLUG.	2	1

CODE EFFECTIVITY

1 TD-534 AND AFTER

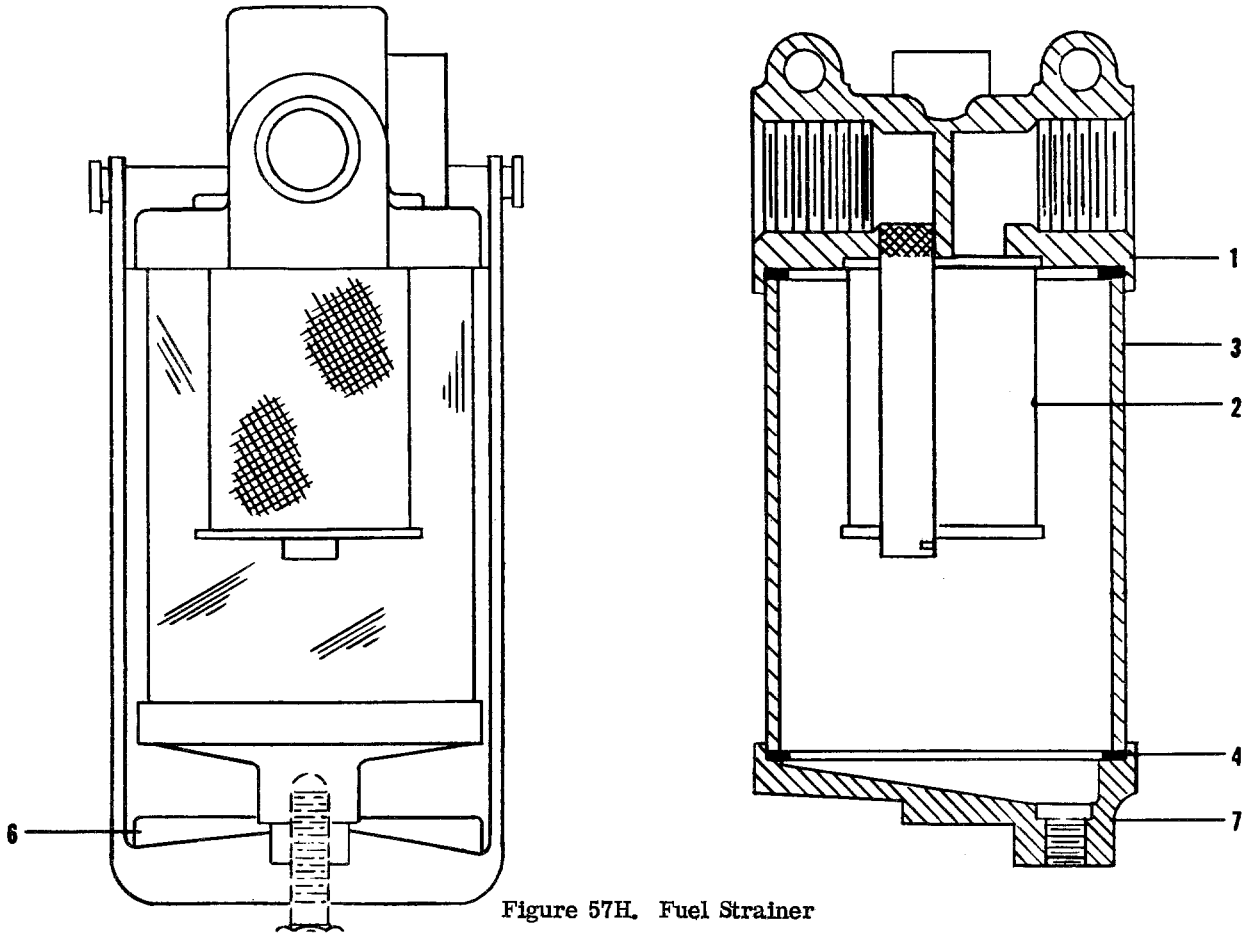

Figure 57H. Fuel Strainer

FIG. & INDEX NO.	PART NO.	DESCRIPTION 1 2 3 4 5 6 7	UNITS PER ASSY	USABLE ON CODE
57H-	G199-25	STRAINER ASSY,FUEL /SEE FIG. 57 FOR NHA/. . . .	2	1
	G199-65	STRAINER ASSY,FUEL /SEE FIG. 57 FOR NHA/. . . .	2	2
	G199-85	STRAINER ASSY,FUEL /SEE FIG. 57A FOR NHA/ . . .	2	3
	G199-105	STRAINER ASSY,FUEL /SEE FIG. 57D FOR NHA/ . . .	2	4
- 1	33-199-906	. CAP ASSY /CONSISTS OF CAP,ARM,PIN & . . . . . STANDPIPE/	1	
- 2	33-199-907	. SCREEN.	1	6
	33-199-910	. SCREEN.	1	3
	33-199-909	. SCREEN.	1	4
- 3	33-199-5	. BOWL,GLASS.	1	1
	33-199-106	. BOWL,ALUMINUM	1	7
	33-199-28	. BOWL,ALUMINUM	1	4
- 4	33-199-6	. GASKET.	2	
- 5	33-199-7	. BOLT /REPLACED BY 33-199-45 SET SCREW . . . . WHEN B IS ADDED TO ASSY DASH NO./	1	5
	33-199-45	. SET SCREW	1	4
- 6	33-199-8	. NUT	1	
- 7	33-199-1	. BOTTOM.	1	

CODE	EFFECTIVITY	CODE	EFFECTIVITY
1	TD-1 THRU TD-185	2	TD-186 THRU TD-452
3	TD-453 THRU TD-533	4	TD-534 AND AFTER
5	TD-1 THRU TD-533	6	TD-1 THRU TD-452
7	TD-186 THRU TD-533		

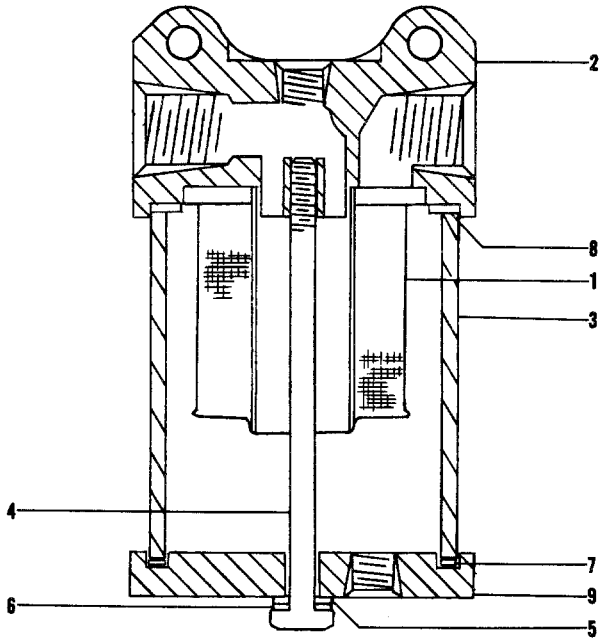

Figure 57L Fuel Strainer (TD-534 & after)

FIG. & INDEX NO.	PART NO.	DESCRIPTION 1 2 3 4 5 6 7	UNITS PER ASSY	USABLE ON CODE
57I-	HE-760-5	FUEL STRAINER ASSY /SEE FIG. 57D FOR NHA/	2	1
- 1	HE-1568-2	STRAINER ELEMENT	1	1
- 2	HE-1530-5	BODY	1	1
- 3	HE-1528-6	CYLINDER	1	1
- 4	AN3H31A	BOLT	1	1
- 5	600-001-10	SEAL	1	1
- 6	AN960-10L	WASHER	1	1
- 7	HE-1526-4	GASKET	1	1
- 8	HE-1526-3	GASKET	1	1
- 9	HE-1531	SUMP PLATE	1	1

CODE EFFECTIVITY

1 TD-534 AND AFTER

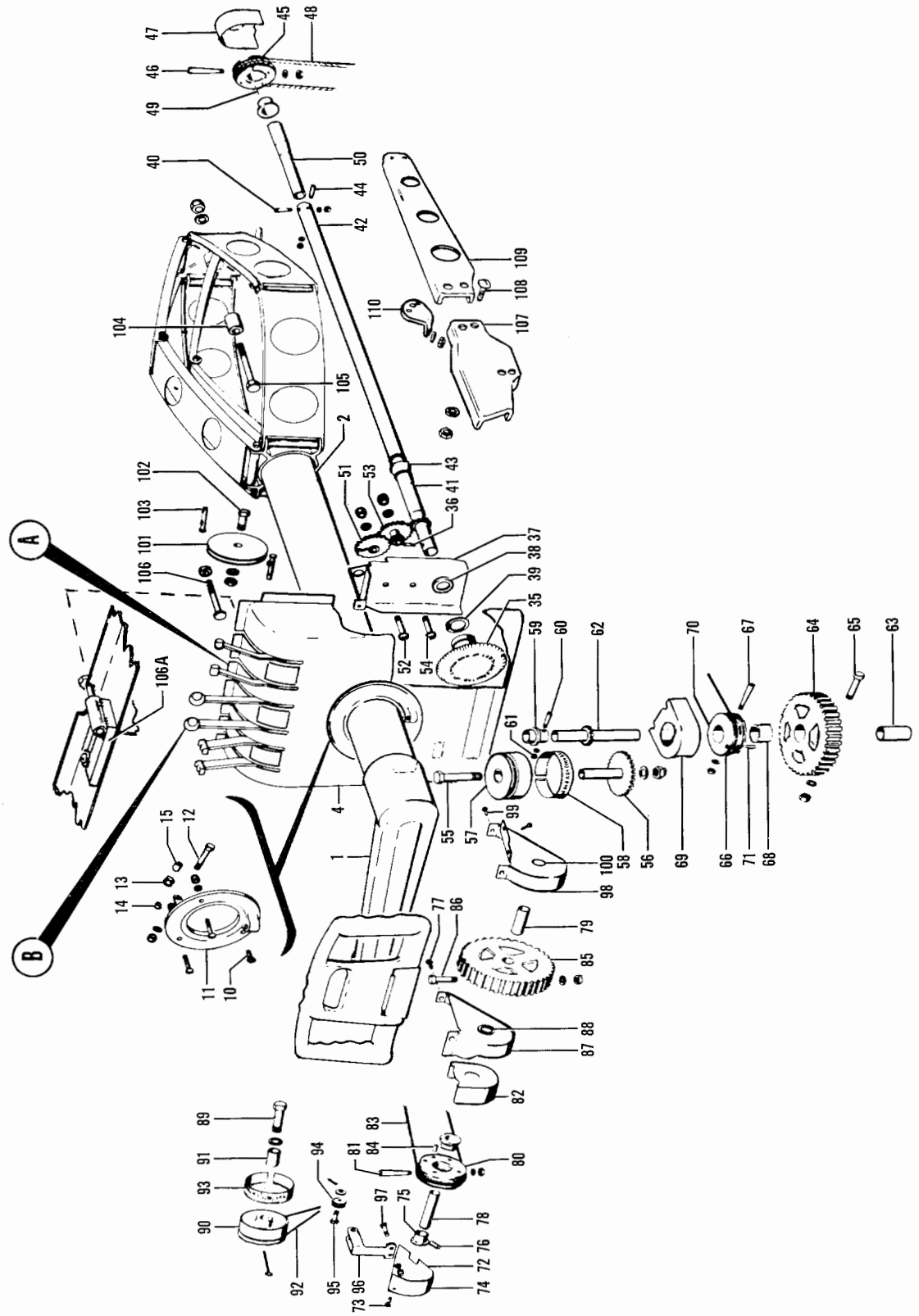

Figure 58. Control Console (TD-1 thru TD-533) (Sht. 1 of 2 Shts.)

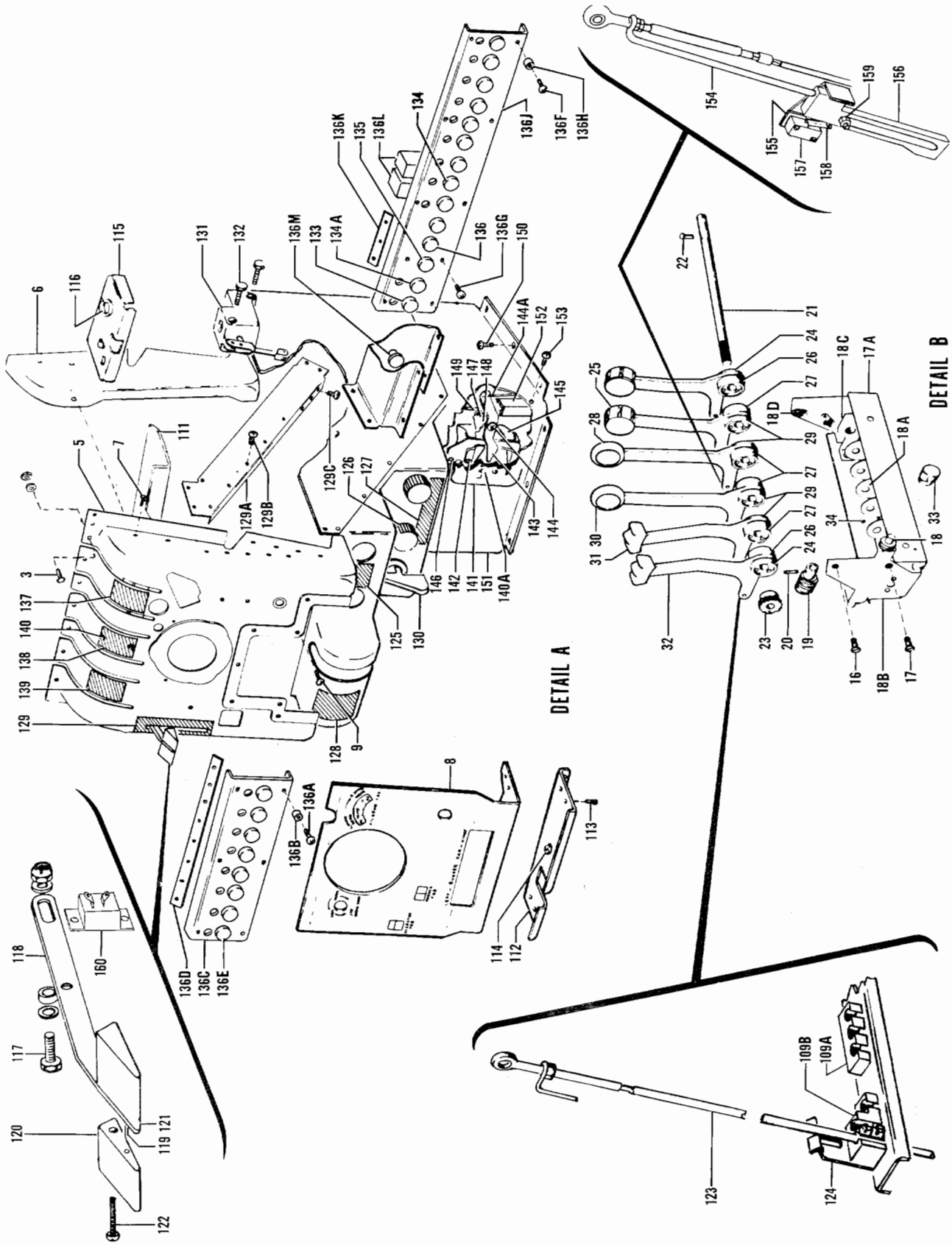

Figure 58. Control Console (TD-1 thru TD-533) (Sht. 2 of 2 Shts.)

FIG. & INDEX NO.	PART NO.	DESCRIPTION 1 2 3 4 5 6 7	UNITS PER ASSY	USABLE ON CODE
58		PANEL & CONTROL CONSOLE INSTL,INSTRUMENT. . . .		1
- 1		. ARM INSTL,CONTROL COLUMN /SEE FIG. 60/. . . .		1
- 2	95-324006-41	. COLUMN ASSY,CONTROL /SEE FIG. 59/	1	1
	50-324026-602	. SHELL ASSY,CENTER PANEL	1	1
		/SPARE ASSY,SEE SECTION 4 FOR COMPONENTS/		
		. SHELL ASSY,CENTER PANEL		1
		/ATTACHING PARTS/		
- 3	AN515-6R6	. SCREW	2	
	AN960-6	. WASHER.	2	
	AN365-632	. NUT	2	
		----*----		
- 4	95-324006-103	. . SHELL,CONSOLE	1	1
- 5	50-320137	. . BEARING,CONTROL	1	1
- 6	95-324006-57	. ESCUTCHEON,CENTER PANEL SHELL LH.	1	1
	95-324006-58	. ESCUTCHEON,CENTER PANEL SHELL RH.	1	1
		/ATTACHING PARTS/		
- 7	NAS338-8-7P	. SCREW	2	
	AN530-6R10	. SCREW	2	
		----*----		
- 8	50-320243-604	. COVER ASSY,INSTRUMENT PANEL	1	1
		/SPARE ASSY,SEE SECTION 4 FOR COMPONENTS/		
		. COVER ASSY,INSTRUMENT PANEL		1
		/ATTACHING PARTS/		
- 9	AN507-632R7	. SCREW	4	
		----*----		
		. HANGER ASSY,CONTROL COLUMN.		1
		/ATTACHING PARTS/		
- 10	AN507-832R10	. SCREW	3	
		----*----		
- 11	35-424125-2	. . HANGER,CONTROL COLUMN	1	1
		. . ROLLER ASSY,HANGER.		1
		/ATTACHING PARTS/		
- 12	AN3-12A	. . BOLT.	3	
- 13	35-524264	. . BUSHING,HANGER ROLLER	3	
	AN960-10L	. . WASHER.	6	
	AN365-1032	. . NUT	3	
		----*----		
- 14	35-524197-2	. . . ROLLER,HANGER	1	1
- 15	GB59	. . . BEARING	1	1
		. CONTROL ASSY,ENGINE UNIT.		1
		/ATTACHING PARTS/		
- 16	AN507-1032R7	. SCREW	3	
- 17	AN507-1032R5	. SCREW	1	
	AN960D10L	. WASHER.	4	
	AN364-1032	. NUT	4	
		----*----		
		. . SUPPORT ASSY,CONTROL.		1
- 17A	95-324006-257	. . . SUPPORT	1	1
- 18	95-324006-265	. . . SHAFT,CONTROL LOCK.	1	1
- 18A	95-324006-259	. . . SPACER.	5	1
- 18B	50-320092	. . . BRACKET ASSY.	1	1
- 18C	295158-56	. . . SPACER ASSY	1	1
	50-320093-6	. . . BRACKET	1	1
	50-320093-10	. . . DOUBLER	1	1
- 18D	22A17-02	. . . NUTPLATE.	1	1
- 19	HLUH	. . . GEAR,WORM	1	1
		/ATTACHING PARTS/		
- 20	59-022-094-0375	. . . PIN,ROLL.	1	
		----*----		
- 21	50-320024	. . SHAFT,ENGINE CONTROL.	1	1
		/ATTACHING PARTS/		
- 22	AN392-13	. . PIN	1	
	AN380-3-3	. . PIN,COTTER.	1	
		----*----		
- 23	50-320091	. . GEAR,FRICTION LOCK.	1	1
- 24	50-944036-3	. . SPACER,FRICTION LOCK.	2	1

FIG. & INDEX NO.	PART NO.	DESCRIPTION 1 2 3 4 5 6 7	UNITS PER ASSY	USABLE ON CODE
58 - 25	50-944041	. . LEVER ASSY,MIXTURE CONTROL LH	1	2
	95-324006-193	. . LEVER ASSY,MIXTURE CONTROL LH	1	3
	95-324006-195	. . . LEVER,MIXTURE CONTROL LH	1	3
	50-944042	. . LEVER ASSY,MIXTURE CONTROL RH	1	2
	95-324006-197	. . LEVER ASSY,MIXTURE CONTROL RH	1	3
	95-324006-199	. . . LEVER,MIXTURE CONTROL RH	1	3
- 26	50-944036-13	. . SPACER,FRICTION LOCK	2	1
- 27	50-944036-11	. . SPACER,FRICTION LOCK	4	1
- 28	95-324006-147	. . LEVER ASSY,THROTTLE RH	1	1
- 29	50-944036-7	. . SPACER,FRICTION LOCK	4	1
- 30	95-324006-143	. . LEVER ASSY,THROTTLE LH	1	1
- 31	95-324006-139	. . LEVER ASSY,PROPELLER RH	1	1
- 32	95-324006-135	. . LEVER ASSY,PROPELLER LH	1	1
		. KNOB ASSY,ENGINE CONTROL FRICTION LOCK		1
- 33	50-320148-2	. . KNOB,ENGINE CONTROL FRICTION LOCK	1	1
- 34	AN565D8H5	. . SCREW	2	1
- 35	50-524124	. KNOB ASSY,AILERON TAB	1	1
		/ATTACHING PARTS/		
	102809-124-025	. PIN	1	
- 36	NAS51-87	. RING,SNAP	1	
		----*----		
- 37	50-320029	. SUPPORT ASSY,INDICATOR	1	1
- 38	50-320137	. . BEARING,SUPPORT	1	1
- 39	100696D-YG006	. SPACER	1	1
	95-324006-71	. SHAFT ASSY,AILERON TAB	1	1
		/ATTACHING PARTS/		
- 40	187714-1	. PIN,TAPER	2	
	AN960-4	. WASHER	2	
	AN365-440	. NUT	2	
		----*----		
- 41	50-524039-267	. . BRAZE ASSY,SHAFT AILERON TAB	1	1
- 42	95-324006-73	. . SHAFT,AILERON TAB	1	1
- 43	AN271B6	. . JOINT,UNIVERSAL	1	1
	95-324006-7	. TUBE ASSY,AILERON TAB	1	1
		/ATTACHING PARTS/		
- 44	187714-1	. PIN,TAB CONTROL SHAFT	2	
	AN960-4	. WASHER	2	
	AN365-440	. NUT	2	
		----*----		
- 45	95-324006-5	. . SPROCKET,AILERON TAB CABLE	1	1
		/ATTACHING PARTS/		
- 46	AN3-7A	. . BOLT	1	
	AN960-10L	. . WASHER	1	
	AN364-1032	. . NUT	1	
		----*----		
- 47	50-524047	. . GUARD,CABLE	1	1
- 48	50-524097	. . CABLE ASSY,TAB	1	1
- 49	35-524028	. . PIN,CABLE LOCK	1	1
- 50	50-524123-2	. . SHAFT,TAB CABLE DRUM	1	1
- 51	50-524040	. INDICATOR ASSY,AILERON TAB	1	1
		/ATTACHING PARTS/		
- 52	AN509-10R28	. SCREW	1	
	AN960-10	. WASHER	1	
	AN365-1032	. NUT	1	
		----*----		
- 53	50-524041	. GEAR ASSY,TAB INDICATOR	1	1
		/ATTACHING PARTS/		
- 54	AN509-10R28	. SCREW	1	
	AN960-10	. WASHER	1	
	AN365-1032	. NUT	1	
		----*----		
	95-524031	. INDICATOR ASSY,RUDDER TAB	1	1
		/ATTACHING PARTS/		
- 55	AN3-24	. BOLT	1	
	AN960-10L	. WASHER	1	
	AN365-1032	. NUT	1	
		----*----		

FIG. & INDEX NO.	PART NO.	DESCRIPTION 1 2 3 4 5 6 7	UNITS PER ASSY	USABLE ON CODE
58 - 56	50-524042-8	. . BRAZE ASSY,TAB INDICATOR.	1	1
- 57	50-524042-2	. . DRUM,RUDDER TAB CABLE	1	1
- 58	95-524032	. . PLACARD,RUDDER TAB INDICATOR.	1	1
- 59	50-524038	. ADAPTER,TAB WHEEL	1	1
		/ATTACHING PARTS/		
- 60	187714-3	. PIN,TAPER	1	
	AN960-10	. WASHER.	1	
- 61	AN365-632	. NUT	1	
		----*----		
	95-324006-157	. DRIVE ASSY,RUDDER TAB	1	1
- 62	50-524043-10	. . BRAZE ASSY,TAB WHEEL.	1	1
- 63	105739X-XG1312	. . BUSHING,TAB WHEEL	1	1
- 64	50-524138	. . WHEEL ASSY,RUDDER TAB	1	1
		/ATTACHING PARTS/		
- 65	AN173-16A	. . BOLT.	1	
	AN960-10	. . WASHER.	1	
	AN365-1032	. . NUT	1	
		----*----		
- 66	45-524539	. . DRUM ASSY,RUDDER TAB CABLE.	1	1
		/ATTACHING PARTS/		
- 67	35-524584	. . PIN	1	
	AN975-3	. . WASHER.	1	
	AN365-1032	. . NUT	1	
		----*----		
- 68	45-524538	. . . BUSHING,TAB DRUM.	1	1
- 69	50-524047	. . GUARD,CABLE	1	1
- 70	NAS302-77-3827	. . CABLE ASSY.	1	1
- 71	35-524028	. . PIN,CABLE LOCK.	1	1
- 72	95-324006-109	. COVER ASSY,ELEVATOR TAB DRUM.	1	1
		/ATTACHING PARTS/		
- 73	AN520-1032R8	. SCREW	3	
	AN515-8R8	. SCREW	1	
		----*----		
- 74	50-524223-1	. . PLACARD,DRUM SHIELD	1	1
- 75	50-524197	. DRUM,ELEVATOR TAB CABLE	1	1
		/ATTACHING PARTS/		
- 76	52-032-156-0562	. PIN,ROLL.	1	
		----*----		
	95-524025	. WHEEL ASSY,ELEVATOR TAB	1	1
		/ATTACHING PARTS/		
- 77	AN3-4A	. BOLT.	2	
	AN960-10	. WASHER.	2	
	AN365-1032	. NUT	2	
		----*----		
- 78	95-524025-7	. . SHAFT,ELEVATOR TAB WHEEL.	1	1
- 79	50-524200-4	. . BUSHING,ELEVATOR TAB WHEEL.	1	1
- 80	95-524023-5	. . SPROCKET,ELEVATOR TAB CONTROL	1	1
		/ATTACHING PARTS/		
- 81	AN3-7A	. . BOLT.	1	
	AN960-10L	. . WASHER.	1	
	AN364-1032	. . NUT	1	
		----*----		
- 82	50-524047	. . GUARD,CABLE	1	1
- 83	NAS302-44-5255	. . CABLE ASSY.	1	1
- 84	35-524028	. . PIN,CABLE	1	1
- 85	50-524138	. . WHEEL ASSY,ELEVATOR TAB	1	1
		/ATTACHING PARTS/		
- 86	AN173-16A	. . BOLT.	1	
	AN960-10	. . WASHER.	1	
	AN365-1032	. . NUT	1	
		----*----		
- 87	50-524201	. . BRACKET ASSY,WHEEL.	1	1
		/ATTACHING PARTS/		
	AN3-5	. . BOLT.	1	
	AN507-8R8	. . SCREW	1	
	AN525-10R10	. . SCREW	3	
		----*----		

FIG. & INDEX NO.	PART NO.	DESCRIPTION 1 2 3 4 5 6 7	UNITS PER ASSY	USABLE ON CODE
58 - 88	50-320032	BEARING,TAB CONTROL	1	1
	95-524029	INDICATOR ASSY,ELEVATOR TAB	1	1
		/ATTACHING PARTS/		
- 89	AN3-17A	BOLT	1	
	AN936A10	WASHER,LOCK	1	
		----*----		
- 90	50-524045-2	DRUM,ELEVATOR TAB CABLE	1	1
- 91	105740X-XE1333	BUSHING	1	1
- 92	50-524045-8	CABLE,ELEVATOR INDICATOR	1	1
- 93	95-524030	PLACARD,ELEVATOR INDICATOR	1	1
- 94	35-524553	PULLEY,CABLE TENSION IDLER	2	1
		/ATTACHING PARTS/		
- 95	AN392-15	PIN	1	
	AN960-6	WASHER	1	
	AN380-2-2	PIN,COTTER	1	
		----*----		
- 96	35-524554	BRACKET,PULLEY	1	1
		/ATTACHING PARTS/		
- 97	AN515-632R6	SCREW	2	
	AN960-6	WASHER	2	
	AN365-632	NUT	2	
		----*----		
- 98	50-524196	BRACKET ASSY,WHEEL	1	1
		/ATTACHING PARTS/		
- 99	AN3-4A	BOLT	2	
	AN960-10	WASHER	2	
	AN365-1032	NUT	2	
		----*----		
-100	50-320032	BEARING,TAB CONTROL	1	1
-101	118540BHP4	PULLEY	1	1
		/ATTACHING PARTS/		
-102	AN4-11A	BOLT	1	
	AN960-416	WASHER	1	
	AN365-428	NUT	1	
		----*----		
-103	NAS427K12	PIN,PULLEY GUARD	2	1
-104	50-524305	GUARD,TAB CHAIN	2	1
		/ATTACHING PARTS/		
-105	AN3-16A	BOLT	1	
	AN960-10	WASHER	1	
	AN365-1032	NUT	1	
		----*----		
-106	95-324006-155	BOLT ASSY,CONTROL COLUMN STOP	1	1
	NAS428-3-6	BOLT	1	1
	AN315-3R	NUT	2	1
-106A	95-324006-59	WELD ASSY,CONTROL COLUMN STOP	1	1
		/ATTACHING PARTS/		
	AN515-8	SCREW	2	
	AN960-8	WASHER	2	
		----*----		
	95-324006-96	CHANNEL,SUPPORT RH	1	1
-107	50-320038	CHANNEL,SUPPORT LH	1	1
		/ATTACHING PARTS/		
-108	AN3-4A	BOLT	2	
	AN960-10	WASHER	2	
	AN365-1032	NUT	2	
		----*----		
-109	95-324006-7	CHANNEL,SUPPORT LH	1	1
	95-324006-8	CHANNEL,SUPPORT RH	1	1

FIG. & INDEX NO.	PART NO.	DESCRIPTION 1 2 3 4 5 6 7	UNITS PER ASSY	USABLE ON CODE
58 -109A	95-324006-89	CLAMP,CONTROL SUPPORT	1	1
-109B	95-324006-91	CLAMP,CONTROL SUPPORT	1	1
		/ATTACHING PARTS/		
	AN3	BOLT	2	
	AN515-1032	SCREW	4	
	AN515-832	SCREW	6	
	AN960-10	WASHER	2	
	AN960-8	WASHER	6	
	AN365-1032	NUT	2	
	AN365-832	NUT	6	
		----*----		
-110	50-524210	BRACKET,ENGINE CONTROL SUPPORT LH	1	1
	50-524210-1	BRACKET,ENGINE CONTROL SUPPORT RH	1	1
-111	95-324006-3	STIFFENER,PANEL	1	1
-112	50-320242	CHANNEL ASSY,SUPPORT	1	1
		/ATTACHING PARTS/		
-113	AN507-632R7	SCREW	4	
	AN960-6	WASHER	4	
	AN365-632	NUT	4	
		----*----		
-114	50-320032	BEARING,TAB CONTROL	1	1
-115	50-320034	SUPPORT ASSY,CONSOLE	1	1
-116	50-320046	BEARING,TAB CONTROL	1	1
	50-320031-2	SUPPORT,CONSOLE LH	1	1
	50-320030-2	SUPPORT,CONSOLE RH	1	1
	95-324006-105	LEVER ASSY	1	1
		/ATTACHING PARTS/		
-117	AN3-4	BOLT	2	
	100696XZC002	SPACER	1	
	100696XZC003	SPACER	1	
	AN960-10L	WASHER	2	
	AN310-3	NUT	2	
	AN380-2-3	PIN,COTTER	2	
	AN960-10	WASHER	2	
		----*----		
-118	95-324006-55	LEVER	1	1
-119	95-324006-133	PIN	1	1
-120	95-324006-129	KNOB	1	1
-121	95-324006-131	KNOB	1	1
		/ATTACHING PARTS/		
-122	AN515-6R18	SCREW	1	
	AN935-6L	WASHER	1	
		----*----		
-123	95-324006-97	ROD,PROPELLER DETENT ACTUATING	2	1
-124	95-324006-87	SPRING,PROPELLER DETENT	1	1
-125	95-324024	PLACARD	1	1
-126	90-3-2	KNOB,OVERHEAD LIGHT	1	1
	90-3-2	KNOB,INSTRUMENT PANEL LIGHT	1	1
	0320-451	RHEOSTAT	1	4
	0320-351	RHEOSTAT	1	5
	0317-451	RHEOSTAT	1	4
	0317-351	RHEOSTAT,INSTRUMENT PANEL LIGHT	1	5
-127	95-324020	PLACARD	1	1
-128	50-524223-3	PLACARD	1	1
-129	95-324046	PLACARD	1	1
	95-324006-15	CHANNEL,CONTROL CONSOLE LH	1	1
-129A	95-324006-16	CHANNEL,CONTROL CONSOLE RH	1	1
		/ATTACHING PARTS/		
-129B	AN525-10	SCREW	25	
-129C	AN520-10	SCREW	8	
		----*----		
-130	711-421-1/8	VALVE,VACUUM SELECTOR /SEE FIG. 62/	1	1
-131	A53T	VALVE ASSY,PARKING BRAKE /SEE FIG. 47A/	1	1
		/ATTACHING PARTS/		
-132	AN520-R10	SCREW	2	
	AN960-10	WASHER	2	
		----*----		

FIG. & INDEX NO.	PART NO.	DESCRIPTION 1 2 3 4 5 6 7	UNITS PER ASSY	USABLE ON CODE
58 -133	PSM30N	BREAKER,CIRCUIT	1	1
-134	PSM5N	BREAKER,CIRCUIT	8	6
	PSM5N	BREAKER,CIRCUIT	9	7
-134A	PSM15N	BREAKER,FLAP MOTOR CIRCUIT	1	8
-135	D7271-1-5	BREAKER,CIRCUIT	1	1
-136	PSM10N	BREAKER,CIRCUIT	1	1
	95-324006-115	CHANNEL ASSY,INSTRUMENT SUB PANEL LH	1	1
		/ATTACHING PARTS/		
-136A	AN520-6	SCREW	6	
-136B	NAS179-6	SPACER	6	
		----*----		
-136C	95-324006-111	CHANNEL,INSTRUMENT SUB PANEL LH	1	1
-136D	114931-1-7	STRIP,TERMINAL	1	1
		/ATTACHING PARTS/		
	AN936A816	WASHER	AR	
		----*----		
-136E	8801K13	SWITCH,SINGLE POLE TOGGLE	1	1
	95-324006-117	CHANNEL ASSY,INSTRUMENT SUB PANEL RH	1	1
		/ATTACHING PARTS/		
-136F	AN520-6	SCREW	8	
-136G	AN515-6	SCREW	2	
-136H	NAS179-6	SPACER	8	
		----*----		
-136J	95-324006-113	CHANNEL,INSTRUMENT SUB PANEL RH	1	1
	114931-1-13	STRIP,TERMINAL	1	9
-136K	114931-1-3	STRIP,TERMINAL	1	10
		/ATTACHING PARTS/		
	AN936A816	WASHER	AR	
		----*----		
-136L	D6752-2-20	BREAKER,CIRCUIT	2	10
		/USED WITH STANDARD 15 AMP GENERATOR/		
	D6752-2-30	BREAKER,CIRCUIT	2	10
		/USED WITH OPTIONAL 25 AMP GENERATOR/		
	D6752-2-50	BREAKER,CIRCUIT	2	10
		/USED WITH OPTIONAL 40 AMP GENERATOR/		
-136M	95-940011-5	CONTROL ASSY,PUSH PULL PARKING BRAKE	1	1
-137	95-324006-159	PLACARD,MIXTURE LEVER	1	1
-138	95-324006-161	PLACARD,THROTTLE INDICATOR	1	1
-139	95-324006-169	PLACARD,PROPELLER PUSH	1	1
		/ATTACHING PARTS/		
-140	AN515-440R5	SCREW	6	
	AN960-4	WASHER	6	
	AN365-440	NUT	6	
		----*----		
-140A	35-815148-9	PLACARD,LANDING GEAR VISUAL INDICATOR	1	1
-141	35-815147	FACE,LANDING GEAR INDICATOR	1	1
		/ATTACHING PARTS/		
-142	PK65A-4-6	SCREW	2	
		----*----		
-143	95-324006-119	INDICATOR,LANDING GEAR	1	1
		/ATTACHING PARTS/		
-144	AN515-8-6	SCREW	1	
	AN960-8	WASHER	2	
	AN365-832	NUT	1	
		----*----		
-144A	95-324006-35	LINK,LANDING GEAR INDICATOR	1	1
-145	35-815146-2	BOX,LANDING GEAR POSITION INDICATOR	1	1
		/ATTACHING PARTS/		
-146	PK76XZ8-10	SCREW	2	
		----*----		
-147	2505	LAMP,INDICATOR	1	1
-148	95-324006-75	BULB,LANDING GEAR INDICATOR	1	1
-149	YZ18H1	CONNECTOR	1	1
	95-324006-167	BOX ASSY,CONTROL CONSOLE	1	1
		/ATTACHING PARTS/		
-150	AN515-8	SCREW	9	
		----*----		

FIG. & INDEX NO.	PART NO.	DESCRIPTION 1 2 3 4 5 6 7	UNITS PER ASSY	USABLE ON CODE
58 -151	95-324006-13	BOX,CONTROL CONSOLE	1	1
-152	95-324006-171	ANGLE,CONTROL CONSOLE BOX	1	1
		/ATTACHING PARTS/		
-153	AN520-10	SCREW	3	
		----*----		
		WARNING INSTL,THROTTLE		1
-154	95-324006-121	ROD	2	1
-155	50-364108	INSULATOR	2	1
-156	50-364129	CAM	2	1
-157	AN3234-2	SWITCH	2	1
-158	JV20	ACTUATOR	2	1
		/ATTACHING PARTS/		
	AN515-4R14	SCREW	4	
	AN960-4	WASHER	4	
-159	100696X-YM015	SPACER	2	
	100951X025	WASHER	4	
	AN526-6R14	SCREW	2	
	AN960-4	WASHER	2	
	AN365-632	NUT	2	
		----*----		
-160	AN3022-1	SWITCH,FLAP CONTROL	1	1
		/ATTACHING PARTS/		
	AN515-6	SCREW	2	
	100696F-ZB019	SPACER	2	
		----*----		

CODE	EFFECTIVITY	CODE	EFFECTIVITY
1	TD-1 THRU TD-533	2	TD-1 THRU TD-186
3	TD-187 THRU TD-533	4	TD-1 THRU TD-185
5	TD-186 THRU TD-533	6	TD-1 THRU TD-202, TD-303 THRU TD-533
7	TD-203 THRU TD-302	8	TD-303 THRU TD-533
9	TD-1 THRU TD-202	10	TD-203 THRU TD-533

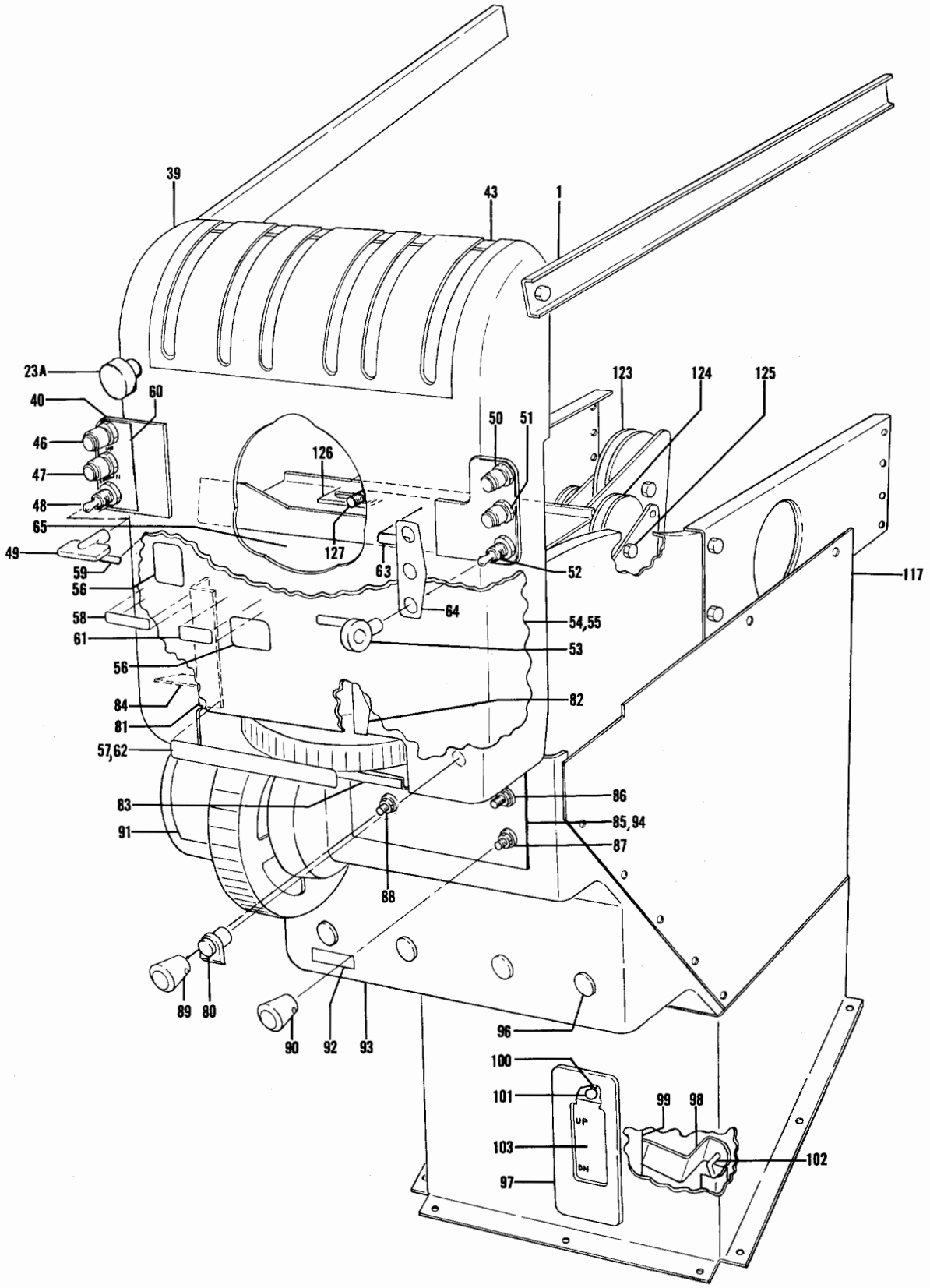

Figure 58A. Control Console (TD-534 and After) (Sheet 1 of 3 Sheets)

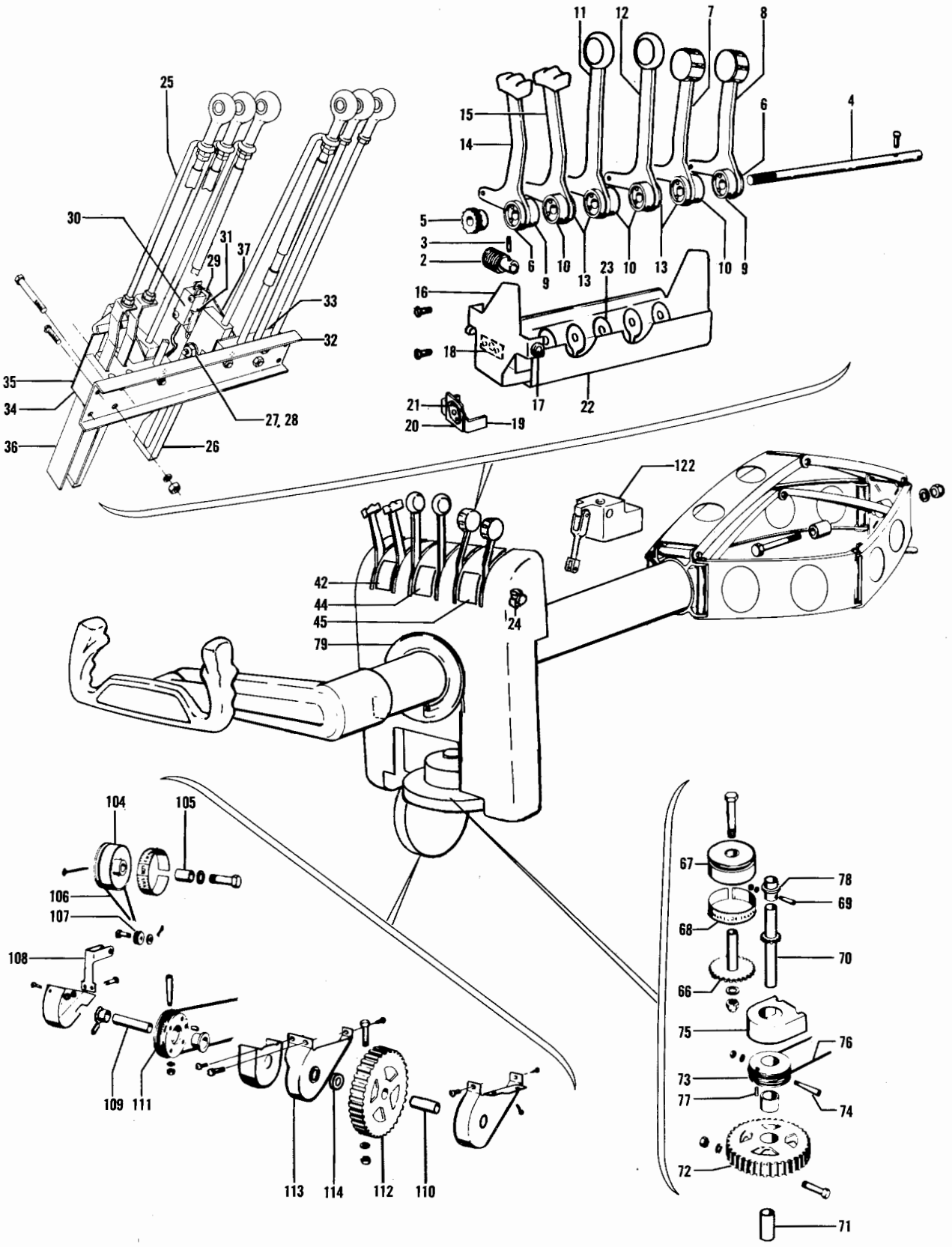

Figure 58A. Control Console (TD-534 and After) (Sheet 2 of 3 Sheets)

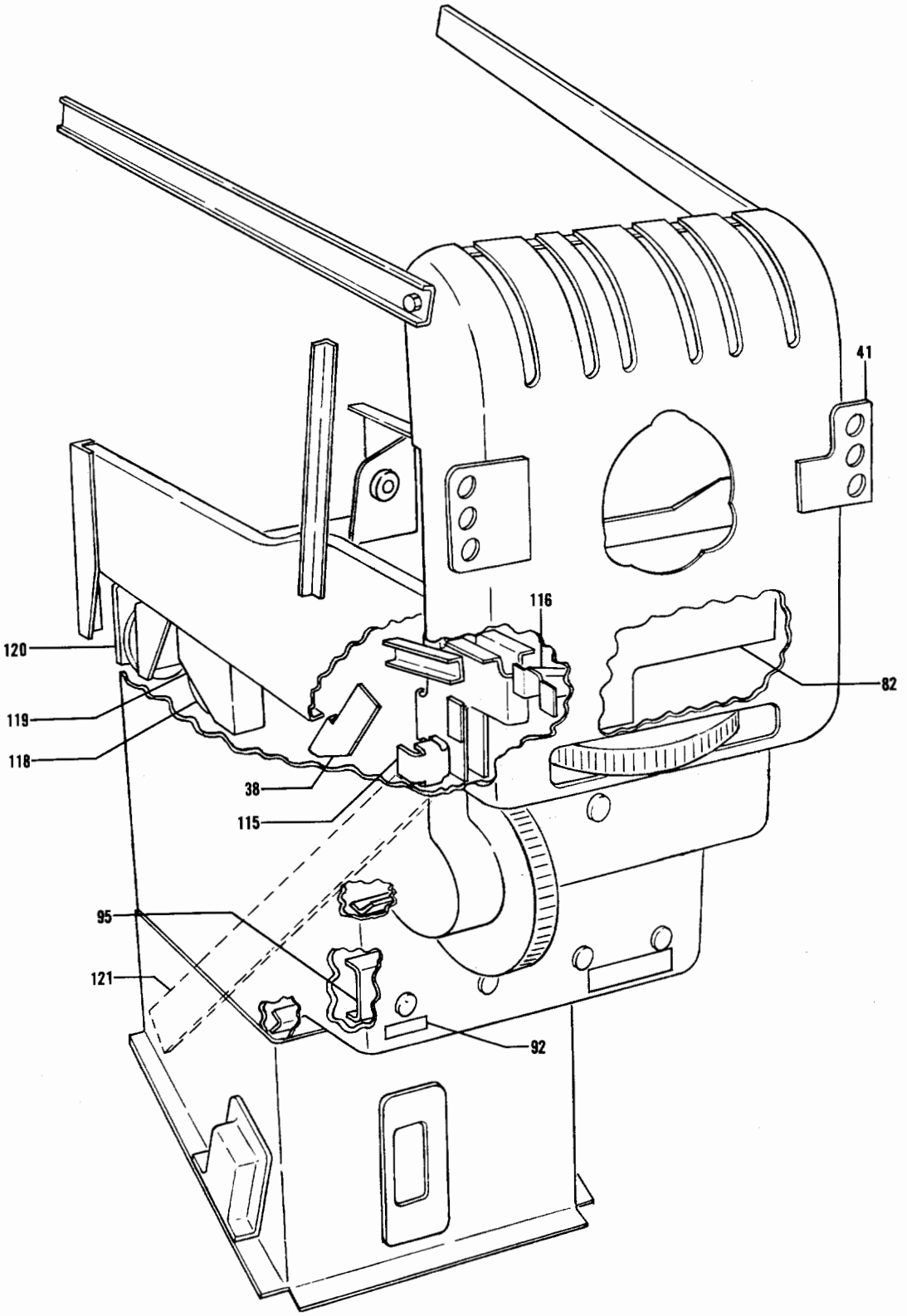

Figure 58A. Control Console (TD-534 and After) (Sheet 3 of 3 Sheets)

FIG. & INDEX NO.	PART NO.	DESCRIPTION 1 2 3 4 5 6 7	UNITS PER ASSY	USABLE ON CODE
58A-	96-324035-1	CONSOLE INSTL,CONTROL	NP	3
	96-324035-23	CONSOLE INSTL,CONTROL	NP	3
	96-324035-39	CONSOLE INSTL,CONTROL	NP	2
	96-324035-41	CONSOLE INSTL,CONTROL	NP	2
- 1	¤96-324035-17	. BAR,TIE LH.	1	1
	¤96-324035-18	. BAR,TIE RH.	1	1
		/ATTACHING PARTS/		
	¤AN3-5A/M/	. BOLT.	1	
	¤AN960-10	. WASHER.	2	
	MS20365-1032	. NUT /SUPERSEDES AN365-1032/	1	
		----*----		
	95-324006-151	. CONTROL ASSY,ENGINE	NP	1
- 2	HLUH	. . GEAR,WORM	1	1
		/ATTACHING PARTS/		
- 3	59-022-094-0375	. . PIN,ROLL.	1	
		----*----		
- 4	¤50-320024	. . SHAFT	1	1
		/ATTACHING PARTS/		
	¤AN392-13	. . PIN	1	
	¤AN380-2-3	. . PIN,COTTER.	1	
		----*----		
- 5	¤50-320091	. . GEAR,FRICTION LOCK.	1	1
- 6	¤50-944036-3	. . SPACER,FRICTION LOCK.	2	1
- 7	95-324006-193	. . LEVER ASSY,MIXTURE CONTROL LH	1	1
- 8	95-324006-197	. . LEVER ASSY,MIXTURE CONTROL RH	1	1
- 9	¤50-944036-13	. . SPACER,FRICTION LOCK.	1	1
- 10	50-944036-11	. . SPACER,FRICTION LOCK.	1	1
- 11	95-324006-143	. . LEVER ASSY,THROTTLE LH.	1	1
- 12	95-324006-147	. . LEVER ASSY,THROTTLE RH.	1	1
- 13	¤50-944036-7	. . SPACER,FRICTION LOCK.	4	1
- 14	¤95-324006-135	. . LEVER ASSY,PROPELLER LH	1	1
- 15	95-324006-139	. . LEVER ASSY,PROPELLER RH	1	1
	50-320092	. . SUPPORT ASSY,ENGINE CONTROLS.	1	1
- 16	50-320092-2	. . . BRACKET	1	1
- 17	F312	. . . BEARING	2	1
- 18	50-320092-4	. . . SPACER.	1	1
	NAS447-10SP	. . . NUTPLATE.	2	1
- 19	¤50-320093-6	. . BRACKET	1	1
- 20	¤50-320093-10	. . DOUBLER	1	1
- 21	¤295927-56	. . SPACER /SUPERSEDES 295158-56/	1	
- 22	95-324006-257	. . SUPPORT	1	1
- 23	¤95-324006-269	. . SPACER.	4	1
	¤AN960-416	. . WASHER.	1	1
	¤22A17-02	. . NUTPLATE.	1	1
	¤AN380-3-3	. . COTTER PIN.	1	1
- 23A	50-320148	. KNOB,FRICTION CONTROL /SEE FIG. 61C FOR NHA	REF	1
- 24	119	. BUSHING	1	1
	¤AN936A616	. WASHER.	1	1
	95-324006-125	. WARNING INSTL,THROTTLE.	NP	1
- 25	95-324006-243	. . ROD	2	1
	¤AN345-10	. . NUT	2	1
- 26	¤50-364129	. . CAM	2	1
- 27	100951X025VB	. . WASHER.	4	1
- 28	100696X-YM015	. . SPACER.	1	1
- 29	50-364108	. . INSULATOR	2	1
- 30	¤V3-1	. . SWITCH.	2	1
- 31	¤JV-20	. . ACTUATOR.	2	1
		/ATTACHING PARTS/		
	AN515-4R14	. . SCREW	2	
	¤AN960-4	. . WASHER.	2	
	¤MS20365-440	. . NUT /SUPERSEDES AN365-440/.	2	
		----*----		
- 32	95-324006-93	. CHANNEL,CONTROL SUPPORT	1	1
		/ATTACHING PARTS/		
	AN515-10R	. SCREW	4	
	¤MS20365-1032	. NUT /SUPERSEDES AN365-1032/	4	
		----*----		

FIG. & INDEX NO.	PART NO.	DESCRIPTION 1 2 3 4 5 6 7	UNITS PER ASSY	USABLE ON CODE
58A- 33	95-324006-91	. CLAMP,ENGINE CONTROL.	1	1
- 34	95-324006-89	. CLAMP,ENGINE CONTROL.	1	1
		/ATTACHING PARTS/		
	AN515-8R	. SCREW	6	
	¤AN960-8	. WASHER.	6	
	¤MS20365-832	. NUT /SUPERSEDES AN365-832/.	6	
		----*----		
- 35	¤95-324006-87	. SPRING,ENGINE CONTROLS.	1	1
		/ATTACHING PARTS/		
	AN3A	. BOLT.	2	
	¤AN960-10	. WASHER.	2	
	¤MS20365-1032	. NUT /SUPERSEDES AN365-1032/	2	
		----*----		
- 36	95-324006-85	. CAM,ENGINE CONTROLS	1	1
- 37	95-324006-123	. BRACKET,ENGINE CONTROLS LH.	1	1
	95-324006-124	. BRACKET,ENGINE CONTROLS RH.	1	1
		/ATTACHING PARTS/		
	AN515-8R	. SCREW	2	
	¤AN960-8	. WASHER.	2	
	¤MS20365-832	. NUT /SUPERSEDES AN365-832/.	2	
		----*----		
- 38	95-324006-83	. BRACKET,ENGINE CONTROLS LH.	1	1
	95-324006-84	. BRACKET,ENGINE CONTROLS RH.	1	1
	96-324035-3	. SHELL ASSY,CONSOLE.	1	4
	96-324035-33	. SHELL ASSY,CONSOLE.	1	5
- 39	96-324035-5	. . SHELL	1	1
- 40	96-324035-7	. . BRACKET,LH.	1	1
- 41	96-324035-8	. . BRACKET,RH.	1	1
- 42	96-324037	. . PLACARD,PROP FEATHERING	1	1
- 43	95-324006-163	. . ANGLE	1	1
- 44	¤95-324006-169	. PLACARD,THROTTLE.	1	1
- 45	¤95-324006-159	. PLACARD,MIXTURE	1	1
- 46	¤VM911M-3H	. LIGHT ASSY,FLAP UP.	1	4
	VM911M-7	. LIGHT ASSY,FLAP UP.	1	5
- 47	¤VM911M-2H	. LIGHT ASSY,FLAP DOWN.	1	4
	¤VM911M-2	. LIGHT ASSY,FLAP DOWN.	1	5
- 48	¤8857K40	. SWITCH,FLAP	1	1
- 49	118664	. KNOB,FLAP SWITCH /SEE FIG. 61C FOR NHA/ . . .	REF	1
		/ATTACHING PARTS/		
	A565B632H3	. SCREW	1	
		----*----		
- 50	¤VM911M-2H	. LIGHT ASSY,LANDING GEAR UP.	1	4
	¤VM911M-2	. LIGHT ASSY,LANDING GEAR UP.	1	5
- 51	¤VM911M-3H	. LIGHT ASSY,LANDING GEAR DOWN.	1	4
	VM911M-7	. LIGHT ASSY,LANDING GEAR DOWN.	1	5
- 52	¤MS25125-E3	. SWITCH,LANDING GEAR /SUPERSEDES 8857K44/. . .	1	3
		/SUPERSEDES -8/		
	60-364011	. SWITCH ASSY,LANDING GEAR SAFETY	1	2
- 53	118665	. KNOB,LANDING GEAR /SEE FIG. 61C FOR NHA/. . .	REF	1
		/ATTACHING PARTS/		
	A565B632H3	. SCREW	1	
		----*----		
- 54	96-324036-605	. COVER ASSY,CONSOLE /SEE FIG. 61C FOR NHA/ . .	1	1
		/SUPERSEDES -11/		
		/ATTACHING PARTS/		
	AN520-10R	. SCREW	3	
	NAS384-6-14	. SCREW	2	
	A6500-6Z1	. NUT,CLIP.	2	
		----*----		
- 55	96-324036-3	. . COVER	1	1
- 56	¤96-324036-5	. . GLASS	2	1
- 57	96-324036-7	. . PLATE	1	1
		/ATTACHING PARTS/		
	AN530-4	. . SCREW	2	
		----*----		

FIG. & INDEX NO.	PART NO.	DESCRIPTION 1 2 3 4 5 6 7	UNITS PER ASSY	USABLE ON CODE
58A- 58	96-324043	. . PLACARD,ELEVATOR TAB.	1	1
- 59	¤96-324049	. . PLACARD,FLAP.	1	1
- 60	¤96-324052	. . PLACARD,FLAP UP-DOWN.	1	1
- 61	96-324044	. . PLACARD,RUDDER TAB.	1	1
- 62	96-324045	. . PLACARD,RUDDER TAB LEFT-RIGHT	1	1
- 63	¤96-324050	. . PLACARD,LANDING GEAR.	1	1
- 64	96-324048	. . PLACARD,LANDING GEAR UP-DOWN.	1	1
- 65	50-320034	. SUPPORT ASSY,RUDDER TAB INDICATOR	1	1
	50-320046	. . BEARING	1	1
-	95-524031	. INDICATOR ASSY,RUDDER TAB	1	1
		/ATTACHING PARTS/		
	¤AN3-24A/M/	. BOLT.	1	
	¤AN960-10L	. WASHER.	1	
	¤MS20365-1032	. NUT /SUPERSEDES AN365-1032/	1	
		----*----		
- 66	50-524042-8	. . BRAZE ASSY,TAB INDICATOR.	1	1
- 67	50-524042-2	. . DRUM,RUDDER TAB CABLE	1	1
- 68	95-524032	. . PLACARD,RUDDER TAB.	1	1
	95-324006-157	. DRIVE ASSY,RUDDER TAB	1	1
		/ATTACHING PARTS/		
- 69	187714-1	. PIN,TAPERED	1	
	¤AN960-10	. WASHER.	1	
	¤MS20365-632	. NUT /SUPERSEDES AN365-632/.	1	
		----*----		
- 70	50-524043-10	. . BRAZE ASSY,TAB WHEEL.	1	1
- 71	105739X-XG1312	. . BUSHING	1	1
- 72	50-524138	. . WHEEL ASSY,RUDDER TAB	1	1
		/ATTACHING PARTS/		
	AN173-16A	. . BOLT.	1	
	¤AN960-10	. . WASHER.	1	
	¤MS20365-1032	. . NUT /SUPERSEDES AN365-1032/	1	
		----*----		
- 73	45-524539	. . DRUM ASSY,RUDDER TAB CABLE.	1	1
		/ATTACHING PARTS/		
- 74	¤35-524584	. . PIN	1	
	¤AN975-3	. . WASHER.	1	
	¤MS20364-1032	. . NUT /SUPERSEDES AN364-1032/	1	
		----*----		
	45-524538	. . . BUSHING,TAB DRUM.	1	1
- 75	50-524047	. . GUARD,CABLE	1	1
- 76	NAS302-77-440	. . CABLE ASSY,RUDDER TAB	1	1
- 77	¤35-524028	. . PIN,CABLE LOCK.	1	1
- 78	50-524038	. ADAPTER,TAB WHEEL	1	1
- 79	35-524125	. HANGER ASSY,CONTROL COLUMN /SEE FIG. 61C NHA/	1	1
- 80	¤A8970-1-327	. LIGHT ASSY.	1	6
	A8970B-1-327	. LIGHT ASSY.	1	7
- 81	50-320031-2	. SUPPORT	1	1
- 82	50-320030	. SUPPORT	1	1
- 83	50-320242	. SUPPORT ASSY.	1	1
- 84	95-324006-5	. STIFFENER,CONSOLE	1	1
- 85	96-324035-25	. PLATE	1	1
- 86	¤XR-5030	. RHEOSTAT,RADIO INDICATOR COMPASS.	1	1
- 87	XR-5023	. RHEOSTAT,OVERHEAD LIGHTS.	1	1
- 88	0153-351	. RHEOSTAT,INSTRUMENT LIGHTS.	1	1
- 89	¤35-380055-1	. KNOB,INSTRUMENT LIGHT RHEOSTAT.	1	1
- 90	¤35-380055-3	. KNOB,INSTRUMENT LIGHT RHEOSTAT.	2	1
	96-324035-13	. COVER ASSY.	1	1
- 91	50-524223-3	. . PLACARD,ELEVATOR TAB WHEEL.	1	1
- 92	95-324266	. . PLACARD,ALTERNATE AIR	1	1
- 93	96-324035-15	. . COVER	1	1
- 94	96-324047	. . PLACARD,LIGHT RHEOSTAT INSTRUCTIONS	1	6
	96-324137	. . PLACARD,LIGHT RHEOSTAT INSTRUCTIONS	1	7
- 95	96-324035-9	. . CHANNEL	1	1
- 96	48154	. . PLUG,BUTTON	4	1
	95-324006-601	. INDICATOR ASSY,LANDING GEAR POSITION.	1	1
- 97	¤35-815147	. . FACE.	1	1
		/ATTACHING PARTS/		
	¤PK65A4-6	. . SCREW	1	
		----*----		

FIG. & INDEX NO.	PART NO.	DESCRIPTION 1 2 3 4 5 6 7	UNITS PER ASSY	USABLE ON CODE
58A- 98	95-324006-119	. . INDICATOR,LANDING GEAR POSITION	1	1
		/ATTACHING PARTS/		
	¤AN515-8R6	. . SCREW	1	
	AN960-8	. . WASHER.	1	
	¤MS20365-832	. . NUT /SUPERSEDES AN365-832/.	1	
		----*----		
- 99	95-324006-165	. . BOX,INDICATOR	1	1
		/ATTACHING PARTS/		
	¤PK76XZ8-10	. . SCREW	2	
		----*----		
-100	¤2505	. . SOCKET.	1	1
-101	¤95-324006-75	. . BULB.	1	6
	¤356	. . BULB.	1	7
	D165-100-2	. . FILTER.	1	7
	¤32445	. . CONNECTOR	1	1
	A6195-8Z-3	. . NUT	2	1
-102	¤95-324006-35	. LINK,LANDING GEAR POSITION INDICATOR.	1	1
		/ATTACHING PARTS/		
	A872-012	. NUT	2	
		----*----		
-103	35-815184-9	. PLACARD,LANDING GEAR INDICATOR.	1	1
	95-524029	. INDICATOR ASSY,ELEVATOR TAB	1	1
		/ATTACHING PARTS/		
	¤AN3-17A/M/	. BOLT.	1	
	¤AN936A10	. WASHER.	1	
		----*----		
-104	50-524045-2	. . DRUM.	1	1
-105	105740X-YY1333	. . BUSHING	1	1
-106	50-524045-8	. . CABLE	1	1
	¤MS24665-130	. . COTTER PIN.	1	1
-107	35-524553	. PULLEY,CABLE TENSION IDLER.	1	1
		/ATTACHING PARTS/		
	¤AN392-15	. PIN,GUARD	1	
	¤AN960-6	. WASHER.	1	
	MS24665-132	. COTTER PIN.	1	
		----*----		
-108	¤35-524554	. BRACKET,PULLEY.	1	1
		/ATTACHING PARTS/		
	¤AN515-6R6	. SCREW	2	
	¤AN960-6	. WASHER.	2	
	¤MS20365-632	. NUT /SUPERSEDES AN365-632/.	2	
		----*----		
	95-524025	. WHEEL ASSY,ELEVATOR TAB	1	1
-109	95-524025-7	. . SHAFT	1	1
-110	50-524200-4	. . BUSHING	1	1
-111	95-524023-5	. . SPROCKET.	1	1
		/ATTACHING PARTS/		
	¤AN3-7A/M/	. . BOLT.	1	
	¤AN960-10L	. . WASHER.	1	
	¤MS20364-1032	. . NUT /SUPERSEDES AN364-1032/	1	
		----*----		
-112	¤50-524138	. . WHEEL ASSY,ELEVATOR TAB	1	1
		/ATTACHING PARTS/		
	AN173-16A	. . BOLT.	1	
	¤AN960-10	. . WASHER.	1	
	¤MS20365-1032	. . NUT /SUPERSEDES AN365-1032/	1	
		----*----		
	95-524025-1	. . BRACKET ASSY.	1	1
-113	95-524025-3	. . . BRACKET	1	1
-114	50-320032	. . . BUSHING	1	1
-115	50-524198	. SUPPORT	1	1
-116	50-320033	. BRACKET	1	1
-117	95-324006-9	. COVER,CONSOLE LH.	1	1
	95-324006-10	. COVER,CONSOLE RH.	1	1

FIG. & INDEX NO.	PART NO.	DESCRIPTION 1 2 3 4 5 6 7	UNITS PER ASSY	USABLE ON CODE
58A-118	¤MS20219-2	. PULLEY,ELEVATOR TAB /SUPERSEDES AN219-2/. . .	2	1
		/ATTACHING PARTS/		
	¤AN4-10A	. BOLT.	1	
	¤AN960-416	. WASHER.	1	
	¤MS20365-428	. NUT /SUPERSEDES AN365-428/.	1	
		----*----		
-119	95-324006-37	. BRACKET PULLEY.	1	1
-120	95-324006-39	. BRACKET,PULLEY.	1	1
-121	95-324006-107	. BRACKET	1	1
-122	¤35-380065-1	. VALVE ASSY,PARKING BRAKE /SEE FIG. 47A/ . . .	1	1
		/SUPERSEDES A35T/		
		/ATTACHING PARTS/		
	¤AN520-10R	. SCREW	2	
	¤AN960-10	. WASHER.	2	
	¤NAS680A3	. NUTPLATE /SUPERSEDES AN366F1032/.	2	
		----*----		
-123	¤118540BHP4	. PULLEY.	1	1
		/ATTACHING PARTS/		
	¤AN4-10A	. BOLT.	1	
	¤AN960-416	. WASHER.	1	
	¤MS20365-428	. NUT /SUPERSEDES AN365-428/.	1	
		----*----		
-124	¤MS220-2	. PULLEY /SUPERSEDES AN220-2/	3	1
		/ATTACHING PARTS/		
	AN5-30A	. BOLT.	1	
-125	100696S-ZU018	. SPACER.	1	
	¤AN960-516	. WASHER.	1	
	¤MS20365-524	. NUT /SUPERSEDES AN365-524/.	1	
		----*----		
-126	95-324006-59	. WELD ASSY,CONTROL COLUMN STOP	1	1
		/ATTACHING PARTS/		
	AN515-8R	. SCREW	2	
	¤AN960-8	. WASHER.	2	
		----*----		
-127	95-324006-155	. BOLT,CONTROL COLUMN STOP.	1	1
	¤AN345-10	. NUT	2	1
	96-524017	. CONTROL COLUMN ASSY /SEE FIG. 59/	NP	1

CODE	EFFECTIVITY	CODE	EFFECTIVITY
1	TD-534 AND AFTER	2	TD-680 AND AFTER
3	TD-534 THRU TD-679	4	TD-534 THRU TD-667
5	TD-668 AND AFTER	6	TD-534 THRU TD-707
7	TD-708 AND AFTER		

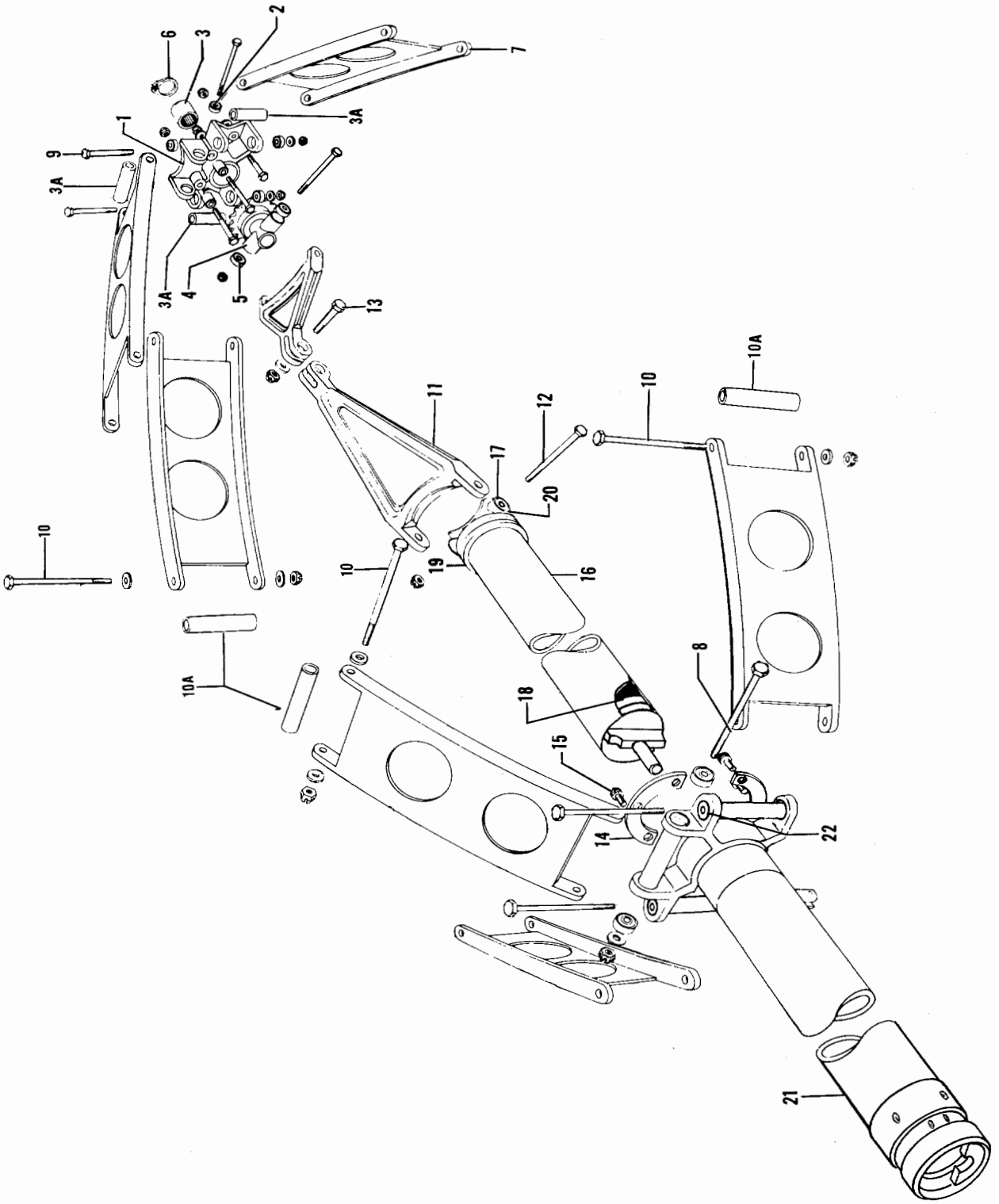

Figure 59. Control Column

FIG. & INDEX NO.	PART NO.	DESCRIPTION 1 2 3 4 5 6 7	UNITS PER ASSY	USABLE ON CODE
59		COLUMN INSTL,CONTROL /SEE FIG. 58 FOR NHA/		1
		COLUMN INSTL,CONTROL		2
	50-524010-2	COLUMN ASSY,CONTROL	1	1
		COLUMN ASSY,CONTROL /SEE FIG. 58A FOR NHA/		2
		/ATTACHING PARTS/		
	AN3-5A	BOLT	2	
	AN960-10	WASHER	2	
	AN365-1032	NUT	2	
		----*----		
	35-524230	HANGER ASSY,CONTROL COLUMN	1	
- 1	35-524231	FITTING,CONTROL COLUMN HANGER	1	
- 2	AN200K3L	BEARING	5	
- 3	B148	BEARING	2	
- 3A	35-524230-2	BUSHING	3	
	35-524274	SPROCKET ASSY,CONTROL COLUMN	1	
- 4	35-524274-4	SPROCKET,CONTROL COLUMN	1	
- 5	AN200K3L	BEARING	2	
- 6	NAS51-87	RING,RETAINER	1	
- 7	35-524240	LINK,CONTROL COLUMN	6	
		/ATTACHING PARTS/		
- 8	35-524269	BOLT,CONTROL COLUMN	3	
- 9	NAS53-32	BOLT	3	
- 10	NAS54-33	BOLT	3	
- 10A	102933D5ZM2452	SPACER	3	
	AN960-10	WASHER	6	
	AN960-416	WASHER	3	
	AN310-3	NUT	6	
	AN310-4	NUT	3	
- 10B	35-524349	NUT,JAM	1	
		----*----		
- 11	35-524047	KNEE,TORQUE	2	
		/ATTACHING PARTS/		
- 12	AN3-26	BOLT	2	
- 13	AN24-14	BOLT	1	
	AN310-3	NUT	2	
	AN960-416	WASHER	1	
	AN320-4	NUT	1	
	AN380-2-3	COTTER PIN	2	
	AN380-2-2	COTTER PIN	1	
		----*----		
- 14	35-524038	WASHER,THRUST	1	
		/ATTACHING PARTS/		
- 15	AN503-8-6	SCREW	6	
		----*----		
	95-324006-43	TUBE ASSY,CONTROL COLUMN INNER	1	1
	96-524017-5	TUBE ASSY,CONTROL COLUMN INNER	1	2
- 16	95-324006-47	TUBE,CONTROL COLUMN INNER	1	1
	96-524017-7	TUBE,CONTROL COLUMN INNER	1	2
- 17	AN200K3L	BEARING	2	
- 18	111503-1125-937	RING	1	
- 19	111503-1375-468	RING	1	
- 20	111503-750-047	RING	1	
	95-324006-45	TUBE ASSY,CONTROL COLUMN	1	1
	96-524017-1	TUBE ASSY,CONTROL COLUMN	1	2
- 21	95-324006-49	TUBE	1	1
	96-524017-3	TUBE	1	2
- 22	AN200K3L	BEARING	6	

CODE	EFFECTIVITY	CODE	EFFECTIVITY
1	TD-1 THRU TD-533	2	TD-534 AND AFTER

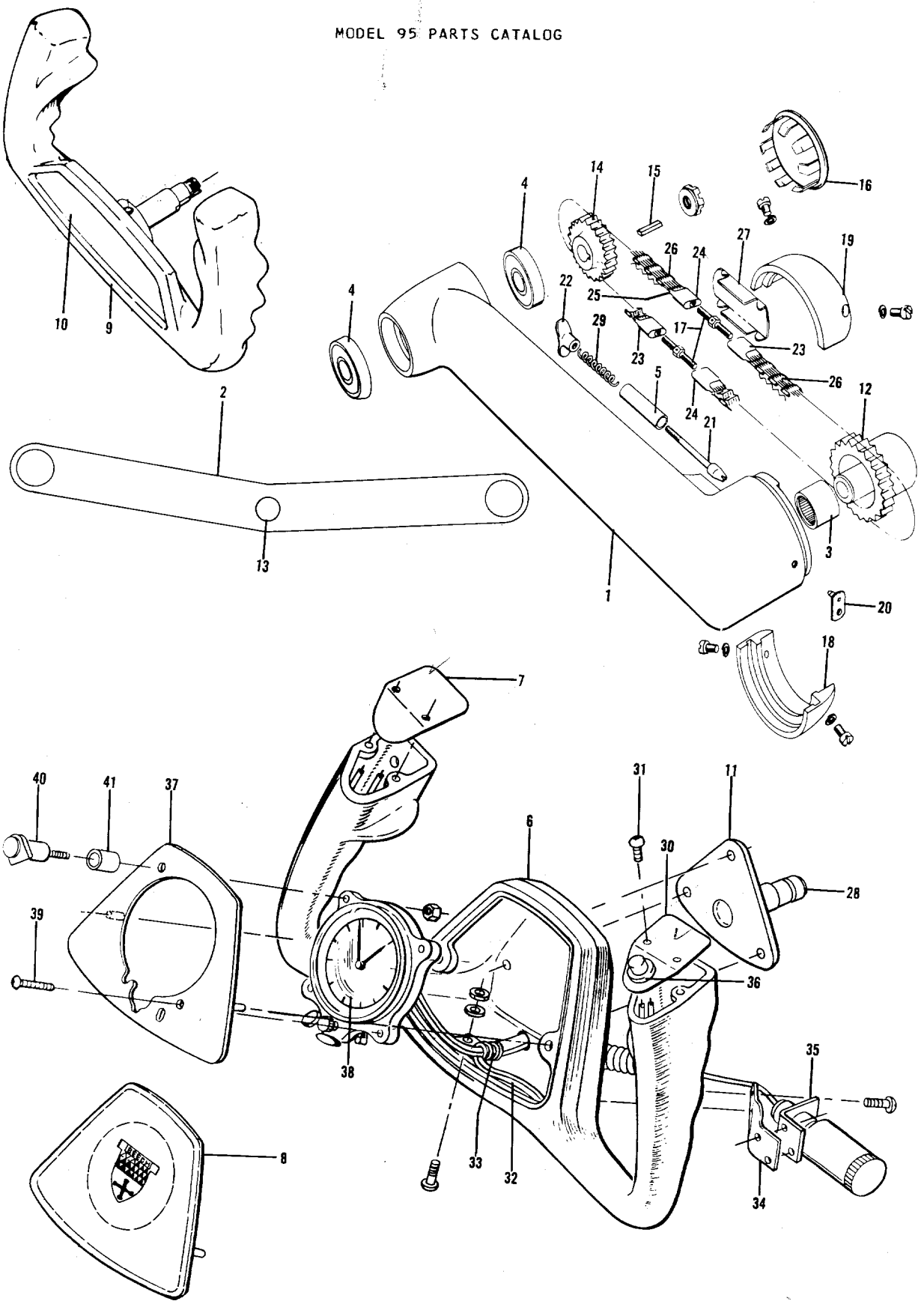

Figure 60. Control Wheel And Arm

FIG. & INDEX NO.	PART NO.	DESCRIPTION 1 2 3 4 5 6 7	UNITS PER ASSY	USABLE ON CODE
60 -	¤35-524585-651	ARM ASSY,SINGLE THROWOVER CONTROL	1	1
	¤35-524585-19	ARM ASSY,SINGLE THROWOVER CONTROL	1	1
	35-524656-651	ARM ASSY,DUAL CONTROL COLUMN.	1	1
	¤35-524656-5	ARM ASSY,DUAL CONTROL COLUMN.	1	1
	35-524585-25	ARM ASSY,SINGLE THROWOVER CONTROL . . . . . /SUPERSEDES 35-524585-19/	1	2
	35-524656-9	ARM ASSY,DUAL CONTROL COLUMN. . . . . /SUPERSEDES 35-524656-5/	1	2
- 1	35-524087-6	. ARM,THROWOVER	1	
- 2	35-524261-8	. ARM,DUAL.	1	
- 3	¤B78X	. BEARING,THROWOVER	1	
	¤B78X	. BEARING,DUAL.	1	
- 4	KP10A	. BEARING,THROWOVER /SUPERSEDES AN201K10A . . . AND K10A/	2	
	KP10A	. BEARING,DUAL /SUPERSEDES AN201K10A. . . . . AND K10A/	4	
- 5	¤35-524241	. BUSHING,THROWOVER	1	
	¤35-524241	. BUSHING,DUAL.	2	
	60-524080	. WHEEL,CONTROL COLUMN THROWOVER & LH DUAL. . .	1	2
	60-524080-1	. WHEEL,CONTROL COLUMN DUAL RH.	1	2
		NOTE 60-524080 & -1 MUST HAVE 96-524029-1 & -3 ADAPTER IF USED AS SPARES PRIOR TO TD-677		
- 6	¤60-524080-3	. . WHEEL,CONTROL THROWOVER & LH DUAL	1	2
	¤60-524080-4	. . WHEEL,RH DUAL CONTROL	1	2
- 7	¤50-524594	. . COVER PLATE . . . . . /ATTACHING PARTS/	2	2
	¤NAS387-440-4P	. . SCREW . . . . . ----*----	2	2
	254-160801-00-0101	. . CLIP,CANOE.	1	2
- 8	¤50-384090	. EMBLEM. . . . . /ATTACHING PARTS/	1	2
	PB094070COG	. CLIP,TUBULAR. . . . . ----*----	2	
	35-380060-19	. WHEEL ASSY,THROWOVER & LH DUAL /UNDRILLED,. . WITH EMBLEM AND PLUG BUTTON/	1	1
	35-380060-20	. WHEEL ASSY,RH DUAL /UNDRILLED,WITH EMBLEM . . AND PLUG BUTTON/	1	1
- 9	35-380060-9	. . WHEEL ASSY,THROWOVER & LH DUAL /UNDRILLED/.	1	1
	35-380060-11	. . WHEEL ASSY,RH DUAL /UNDRILLED/.	1	1
- 10	¤50-524348	. . EMBLEM.	1	1
	¤207-400301-00-0617	. . PLUG BUTTON	2	1
	35-380060-21	. WHEEL ASSY,THROWOVER & LH DUAL /DRILLED,LESS. EMBLEM AND PLUG BUTTON/	1	1
	35-380060-23	. WHEEL ASSY,RH DUAL /DRILLED,LESS EMBLEM . . . AND PLUG BUTTON/	1	1
	¤35-663-1A/M/	. KIT,CONTROL WHEEL THROWOVER & LH DUAL . . . . /DRILLED,WITH EMBLEM AND PLUG BUTTON/ /SUPERSEDES 35-380060-25/	1	1
	¤35-380060-27	. WHEEL ASSY,RH DUAL /DRILLED,WITH EMBLEM . . . AND PLUG BUTTON/	1	1
- 11	¤96-524029-1	. ADAPTER ASSY,LH DUAL AND THROWOVER.	1	2
	¤96-524029-3	. ADAPTER ASSY,RH DUAL. . . . . /ATTACHING PARTS/	1	2
	¤AN23-8A/M/	. BOLT.	3	
	¤AN960-10	. WASHER.	3	
	MS20365-1032	. NUT . . . . . ----*----	3	
- 12	¤35-524051-1	. SPROCKET,THROWOVER CONTROL COLUMN	1	
- 13	¤35-524262-1	. SPROCKET,DUAL CONTROL COLUMN.	1	
- 14	¤35-524048	. SPROCKET,THROWOVER & DUAL CONTROL COLUMN. . . /ATTACHING PARTS/	1	
	¤AN380-3-4	. PIN	1	
	¤AN320-7	. NUT . . . . . ----*----	1	

SC-524 348

FIG. & INDEX NO.	PART NO.	DESCRIPTION 1 2 3 4 5 6 7	UNITS PER ASSY	USABLE ON CODE
60 - 15	¤AN280H404	. KEY,WOODRUFF.	1	
- 16	51020	. PLUG,BUTTON	1	
- 17	¤35-524141	. CONNECTOR	2	
- 18	¤35-524238-12	. RETAINER ASSY,THROWOVER & DUAL CONTROL LOWER.	1	2
- 19	¤35-524238-4	. RETAINER ASSY,THROWOVER & DUAL CONTROL UPPER.	1	2
- 20	¤50-524315	. KEY ASSY,DUAL CONTROL ARM	1	
- 21	¤35-524095	. PIN	1	
- 22	¤35-524096	. KNOB.	1	
	¤35-524139	. CHAIN ASSY,THROWOVER CONTROL.	2	
	¤35-524139	. CHAIN ASSY,DUAL CONTROL	4	
- 23	35-524140-2	. . FITTING,END	1	
- 24	35-524140-4	. . FITTING,END	1	
- 25	¤102809-072-018	. . PIN,END FITTING	2	
- 26	35-524139-1	. . CHAIN	1	
	¤35-524587	. COVER ASSY,DUAL CONTROL ACCESS RH	1	
- 27	¤35-524587-2	. COVER ASSY,THROWOVER & DUAL CONTROL	1	
- 28	¤35-524645-1	. SHAFT,THROWOVER CONTROL	1	2
- 29	¤100943ZG108G	. SPRING,TENSION.	1	
	50-364344-9	LIGHT INSTL,MAP	NP	
- 30	50-364344-7	. PLATE MOUNTING.	1	
		/ATTACHING PARTS/		
- 31	¤NAS387-440-4P	. SCREW	2	
		----*----		
- 32	8409	. CORD,COILED	1	
- 33	MS21919DG2	. CLAMP	3	
		/ATTACHING PARTS/		
	¤AN520-10R8	. SCREW	1	
	¤AN960-10	. WASHER.	1	
	¤MS20364-1032	. NUT	1	
		----*----		
- 34	50-364344-3	. CLIP.	1	
		/ATTACHING PARTS/		
	¤AN515-6R6	. SCREW	4	
	¤AN960-6	. WASHER.	4	
	¤MS20364-632	. NUT	4	
		----*----		
- 35	¤20-0041	. LIGHT ASSY,MAP /LESS BULB/.	1	
	¤1495	. BULB,LIGHT.	1	
- 36	¤L18366-5	. SWITCH ASSY,MAP LIGHT	1	
	50-534622-1	CLOCK INSTL,CONTROL WHEEL /8 DAY CLOCK/	NP	2
	50-534622-3	CLOCK INSTL,CONTROL WHEEL /CHRONOGRAPH CLOCK/ .	NP	2
- 37	¤50-534622-9	. PLATE /WITH 8 DAY CLOCK/.	1	2
	¤50-534622-11	. PLATE /WITH CHRONOGRAPH CLOCK/.	1	2
- 38	50-534622-13	. CLOCK ASSY /CHRONOGRAPH/.	1	2
	50-534622-17	. CLOCK ASSY /8 DAY/.	1	2
		/ATTACHING PARTS/		
- 39	¤AN515-6R8	. SCREW	1	
	¤AN960-6	. WASHER.	1	
	MS20364-632	. NUT	1	
- 40	A6795B	. LIGHT ASSY,POST	1	
- 41	50-534622-15	. SPACER.	1	
	¤AN960-6	. WASHER.	AR	
		----*----		
	¤327	. BULB,POST LIGHT	1	2
	8409	. CORD,COILED	1	2
	MS21919DG4	. CLAMP	3	2
		/ATTACHING PARTS/		
	¤AN520-10R8	. SCREW	1	
	¤AN960-10	. WASHER.	2	
	¤MS20364-1032	. NUT	1	
		----*----		

CODE	EFFECTIVITY	CODE	EFFECTIVITY
1	TD-1 THRU TD-677	2	TD-678 AND AFTER

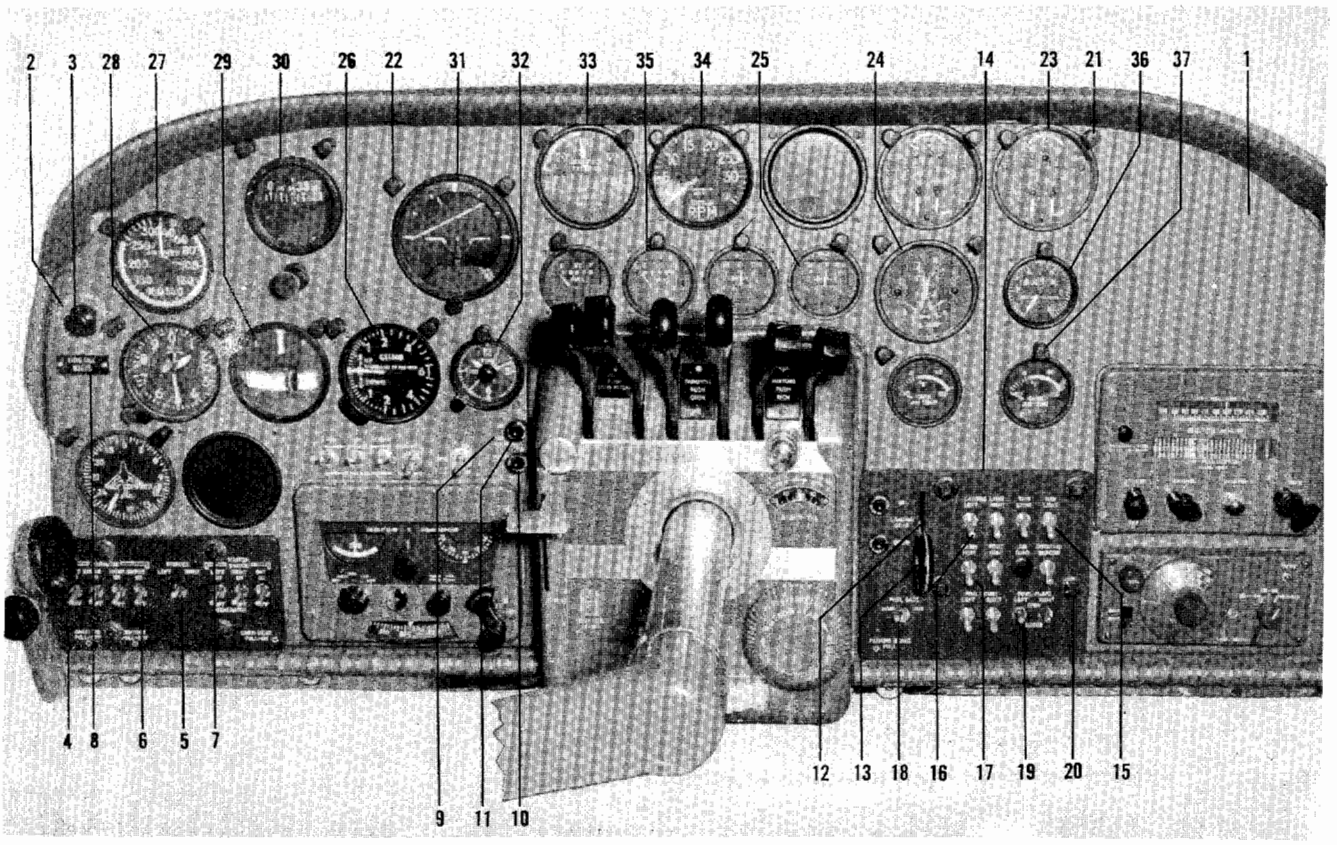

Figure 61. Floating Panel (TD-1 thru TD-302)

FIG. & INDEX NO.	PART NO.	DESCRIPTION 1 2 3 4 5 6 7	UNITS PER ASSY	USABLE ON CODE
61	95-324035-11	PANEL ASSY,FLOATING /STANDARD/.	1	1
	95-324035-47	PANEL ASSY,FLOATING /STANDARD/.	1	2
	95-324035-1	PANEL ASSY,FLOATING /OPTIONAL/.	1	1
	95-324035-45	PANEL ASSY,FLOATING /OPTIONAL/.	1	2
		/USED WITH NARCO RADIO INSTL/		
	95-324035-39	PANEL ASSY,FLOATING /SPARE ASSY/.	1	1
	95-324035-43	PANEL ASSY,FLOATING /SPARE ASSY/.	1	2
	95-554017-11	. MOUNT ASSY,SHOCK LH	1	1
	95-554017-19	. MOUNT ASSY,SHOCK RH	1	1
	95-554017-35	. MOUNT ASSY,SHOCK LH	1	2
	95-554017-37	. MOUNT ASSY,SHOCK.	1	2
- 1	95-324005-43	. PANEL ASSY,BLANK.	1	3
- 2	95-324115-2	. PLACARD,STALL WARNING INDICATOR	1	3
- 3	TYPE 130	. LIGHT,PRESS TO TEST STALL WARNING	1	3
	95-324035-29	. BOX ASSY,INSTRUMENT PANEL	1	1
	95-324035-25	. PANEL ASSY,INSTRUMENT	1	1
- 4	95-324035-27	. . PLATE,INSTRUMENT PANEL.	1	1
- 5	8906K751	. . BREAKER,CIRCUIT	1	1
- 6	8906K754	. . BREAKER,CIRCUIT	7	1
	8906K754	. . BREAKER,CIRCUIT	4	2
	35-364050	. . SWITCH,IGNITION	1	2
	100951R-.156XP	. . WASHER.	1	2
	95-324057	. . PLACARD,IGNITION SWITCH INSTRUCTION	1	6
	95-364020	. . BAR,MAGNETO SWITCH BUS.	1	3
- 7	MS25010-31	. . LIGHT,PANEL	4	3
	100696S-YP003	. . SPACER.	4	3
- 8	95-324005-33	. PLACARD,RADIO CALL.	1	3
- 9	95-324023	. PLACARD,FLAP POSITION	1	3
- 10	VM911M2H	. LIGHT ASSY.	2	3
- 11	VM911M3H	. LIGHT ASSY.	2	3

FIG. & INDEX NO.	PART NO.	DESCRIPTION 1 2 3 4 5 6 7	UNITS PER ASSY	USABLE ON CODE
61	95-324012	SWITCH ASSY,LANDING GEAR	1	3
	AN3022-3	SWITCH	1	3
- 12	95-324012-13	ARM ASSY,SWITCH /ATTACHING PARTS/	1	3
	AN3-4	BOLT	2	
	102933S4ZH0075	SPACER	1	3
	100951S062ZL	SPACER	1	
	AN960-10	WASHER	2	
	AN310-3	NUT	2	
	AN380-2-3	PIN,COTTER	2	
		----*----		
- 13	95-324012-15	KNOB,LANDING GEAR SWITCH /ATTACHING PARTS/	2	3
	NO NUMBER	SCREW,3/8-INCH	1	
		----*----		
	95-324035-3	PANEL ASSY,FLOATING	1	3
- 14	95-324035-5	PANEL,FLOATING	1	3
- 15	D7270-6-5	BREAKER,CIRCUIT	6	3
	114931-1-2	STRIP,TERMINAL	1	3
- 16	D7270-6-15	BREAKER,CIRCUIT	2	3
	114931-1-4	STRIP,TERMINAL	2	3
- 17	D7270-6-20	BREAKER,CIRCUIT	1	3
- 18	8906K753	BREAKER,CIRCUIT	1	3
- 19	8800-K13	BREAKER,CIRCUIT /SUPERCEDES 8906K752/	2	1
	8906K762	BREAKER,CIRCUIT	2	2
- 20	MS25010-3A	LIGHT,PANEL	4	3
	VM912-4	LIGHT,COWL FLAP INDICATOR	1	2
- 21	A8970-1-327	LIGHT,INSTRUMENT	2	4
	A8970-2-327	LIGHT,INSTRUMENT	4	4
	A8970-1-327	LIGHT,INSTRUMENT	25	5
- 22	A8975-1-327	LIGHT,INSTRUMENT	2	3
- 23	95-324011-13	GAUGE,ENGINE FUEL & OIL /YELLOW FLOURESCENT/	2	7
	95-324011-37	GAUGE,ENGINE FUEL & OIL /MATTE WHITE/	2	7
	95-324011-23	GAUGE,ENGINE FUEL & OIL /YELLOW FLOURESCENT/	2	8
	95-324011-39	GAUGE,ENGINE FUEL & OIL /MATTE WHITE/	2	8
- 24	95-324011-11	GAUGE,CYLINDER HEAD TEMPERATURE	1	3
	1501842	AMMETER /SPARE ASSY/	2	9
- 25	95-324011-19	AMMETER	2	9
	14028-2	AMMETER	2	10
- 26	1636-6A-B1	INDICATOR,RATE OF CLIMB	1	3
- 27	95-324011-3	INDICATOR,AIRSPEED	1	3
- 28	671B0-010	ALTIMETER	1	3
	G-371-01N-1B	ALTIMETER /ALTERNATE FOR 671B0-010/ /SUPERCEDES G-371-01-1B/	1	3
- 29	50-380006-1	INDICATOR,TURN & BANK	1	3
- 30	646050-1F	GYRO,DIRECTIONAL	1	3
	95-344027	PLACARD,MARKER BEACON IDENTIFICATION	1	2
- 31	661062-F	GYRO,HORIZON	1	3
	656768ICF	GYRO,HORIZON /ALTERNATE FOR 661062-F/	1	3
- 32	35-380004-1	CLOCK,EIGHT DAY /FOR INSTL ON THE DECK SEE FIG. 14/	1	3
- 33	95-324011-7	GAUGE,MANIFOLD PRESSURE	1	3
	95-324011-5	TACHOMETER,ENGINE	2	3
- 34	95-324011-15	TACHOMETER,ENGINE /OPTIONAL DUAL/	1	3
	1518897	GAUGE,FUEL /SPARE ASSY/	2	9
- 35	B-31571-1	GAUGE,FUEL /SPARE ASSY/SUPERCEDES 14028-1/	2	10
- 36	50-384015	GAUGE,SUCTION	1	3
	95-324054-1	ADAPTER,RADIO SUBPANEL	1	2
		INSTRUMENT INSTL,CARBURETOR AIR TEMPERATURE		3
- 37	95-324011-9	INDICATOR,CARBURETOR AIR TEMPERATURE	2	3

CODE	EFFECTIVITY	CODE	EFFECTIVITY
1	TD-1 THRU TD-173	2	TD-174 THRU TD-302
3	TD-1 THRU TD-302	4	TD-1 THRU TD-233
5	TD-234 THRU TD-302	6	TD-178 THRU TD-302
7	TD-1 THRU TD-71	8	TD-72 THRU TD-302
9	TD-1 THRU TD-142	10	TD-143 THRU TD-302

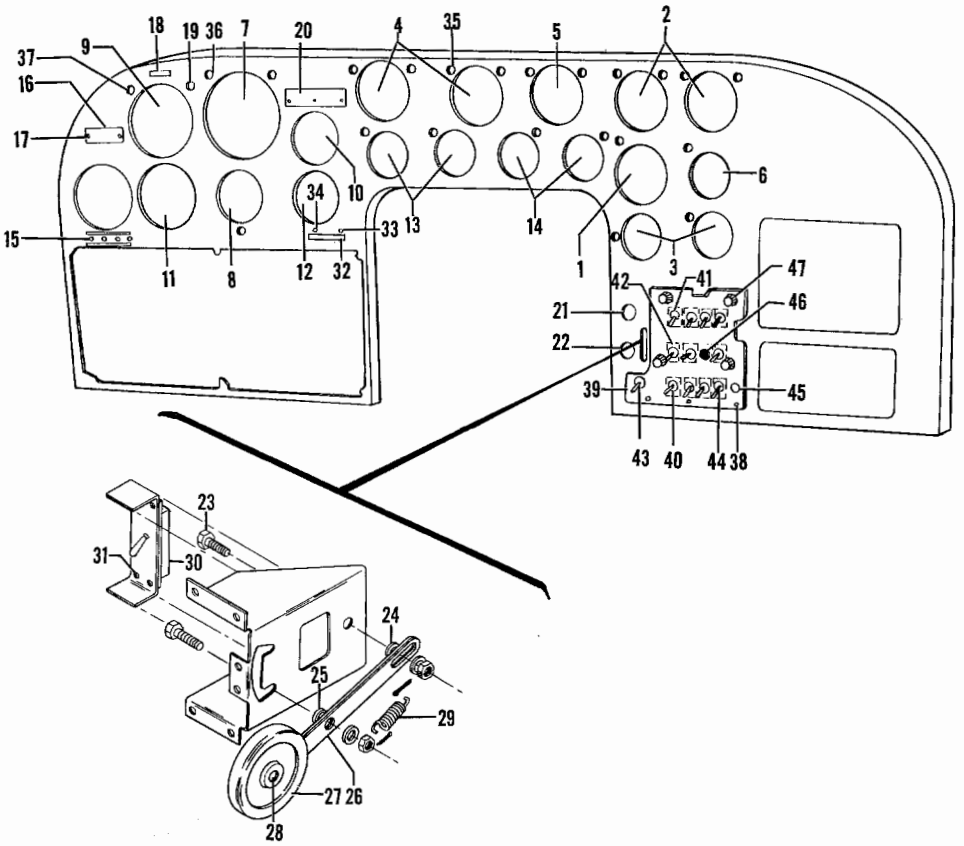

Figure 61A. Floating Panel (TD-303 thru TD-452)

FIG. & INDEX NO.	PART NO.	DESCRIPTION 1 2 3 4 5 6 7	UNITS PER ASSY	USABLE ON CODE
61A-	95-324007-5	PANEL ASSY,B95 INSTRUMENT FLOATING /SPARE ASSY/	1	1
		PANEL ASSY,INSTRUMENT FLOATING /OPTIONAL/ . . . /USED WITH INSTRUMENT LIGHTS/		1
		PANEL ASSY,INSTRUMENT FLOATING /STANDARD/ . . . /USED WITHOUT INSTRUMENT LIGHTS/		1
	95-324035-69	. PANEL,FLOATING /STANDARD/	1	1
	95-324005-43	. PANEL ASSY,BLANK.	1	1
	95-324035-67	. PANEL,FLOATING /OPTIONAL/ . . . . . /USED WITH NARCO RADIO INSTL/	1	1
	95-554017-35	. MOUNT ASSY,SHOCK LH	1	1
	95-554017-37	. MOUNT ASSY,SHOCK RH	1	1
- 1	95-324011-33	. . INDICATOR,CYLINDER HEAD TEMPERATURE . . . . /MATTE WHITE/ /ATTACHING PARTS/	1	1
	AN507B632R	. . SCREW	4	
		----*----		
- 2	95-324011-39	. . GAUGE,ENGINE. . . . . /ATTACHING PARTS/	2	1
	AN507B632R	. . SCREW	4	
		----*----		
- 3	95-324011-41	. . INDICATOR,CARBURETOR AIR TEMPERATURE. . . . /ATTACHING PARTS/	2	1
	AN507B632R	. . SCREW	4	
		----*----		
- 4	95-324011-29	. . TACHOMETER,SINGLE ENGINE /MATTE WHITE/. . .	2	1
	95-324011-35	. . TACHOMETER,DUAL ENGINE /OPTIONAL/ . . . . . /MATTE WHITE/ /ATTACHING PARTS/	1	1
	AN507B632R	. . SCREW	4	
		----*----		

FIG. & INDEX NO.	PART NO.	DESCRIPTION 1 2 3 4 5 6 7	UNITS PER ASSY	USABLE ON CODE
61A- 5	95-324011-31	. . INDICATOR,MANIFOLD PRESSURE /MATTE WHITE/ . /ATTACHING PARTS/	1	1
	AN507B632R	. . SCREW	4	
		----*----		
- 6	95-324035-55	. . GAUGE,SUCTION	1	1
	95-324035-53	. . GUAGE,SUCTION /USED WITH AUTOMATIC PILOT/ . /ATTACHING PARTS/	1	1
	AN507B632R	. . SCREW	4	
		----*----		
- 7	646040ICF4	. . GYRO,HORIZON /USED WITHOUT AUTOMATIC PILOT/ /ATTACHING PARTS/	1	1
	AN507B632R	. . SCREW	4	
		----*----		
- 8	35-380039	. . GYRO,DIRECTIONAL /SUPERCEDES 646050-1TN-4/. /USED WITHOUT AUTOMATIC PILOT/ /ATTACHING PARTS/	1	1
	AN507B632R	. . SCREW	4	
		----*----		
- 9	95-324011-27	. . INDICATOR,AIRSPEED /MATTE WHITE/. . . . . /ATTACHING PARTS/	1	1
	AN507B632R	. . SCREW	4	
		----*----		
- 10	95-324035-61	. . ALTIMETER . . . . . /ATTACHING PARTS/	1	1
	AN507B632R	. . SCREW	3	
		----*----		
- 11	95-324035-63	. . INDICATOR,TURN & BANK . . . . . /ATTACHING PARTS/	1	1
	AN507B632R	. . SCREW	4	
		----*----		
- 12	95-324035-65	. . INDICATOR,RATE OF CLIMB . . . . . /ATTACHING PARTS/	1	1
	AN507B632R	. . SCREW	4	
		----*----		
- 13	5644416	. . GAUGE,FUEL.	2	2
	95-380018	. . GAUGE,FUEL. . . . . /ATTACHING PARTS/	2	3
	AN507B632R	. . SCREW	4	
		----*----		
- 14	95-324035-49	. . AMMETER . . . . . /ATTACHING PARTS/	2	1
	AN507B632R	. . SCREW	4	
		----*----		
- 15	95-324061	. . PLACARD,RADIO CONTROL SWITCH IDENTIFICATION	1	1
- 16	95-324005-33	. . PLACARD,RADIO CALL. . . . . /ATTACHING PARTS/	1	1
- 17	AN530-2R4	. . SCREW	2	
		----*----		
- 18	95-324060	. . PLACARD,STALL WARNING LIGHT IDENTIFICATION.	1	1
- 19	VM912M6	. . LIGHT ASSY,STALL WARNING.	1	1
- 20	95-324063	. . PLACARD,MARKER BEACON LIGHTS IDENTIFICATION	1	1
- 21	VM911M2H	. . LIGHT ASSY,LANDING GEAR SWITCH.	1	1
- 22	VM911M3H	. . LIGHT ASSY,LANDING GEAR SWITCH.	1	1
	95-324012	. . SWITCH ASSY,LANDING GEAR.	1	1
	95-324012-13	. . . ARM ASSY,LANDING GEAR SWITCH. . . . . /ATTACHING PARTS/	1	1
- 23	AN3-4	. . . BOLT.	2	
- 24	100696X-ZC002	. . . SPACER.	1	
- 25	100696X-ZC004	. . . SPACER.	1	
	AN960-10	. . . WASHER.	2	
	100951S062ZL	. . . WASHER.	2	
	AN310-3	. . . NUT	2	
	AN380-2-3	. . . PIN,COTTER.	2	
		----*----		

FIG. & INDEX NO.	PART NO.	DESCRIPTION 1 2 3 4 5 6 7	UNITS PER ASSY	USABLE ON CODE
61A- 26	95-324012-11	. . . . BRAZE ASSY,LANDING GEAR SWITCH.	1	1
- 27	95-324012-15	. . . . KNOB,LANDING GEAR SWITCH.	2	1
		/ATTACHING PARTS/		
- 28	NO NUMBER	. . . . SCREW,3/8-INCH.	1	
		----*----		
- 29	734-183864	. . . SPRING,LANDING GEAR SWITCH.	1	1
- 30	AN3022-3	. . . SWITCH,LANDING GEAR	1	1
		/ATTACHING PARTS/		
- 31	AN515-6-4	. . . SCREW	2	
		----*----		
- 32	95-324059	. . PLACARD,FLAP POSITION LIGHTS IDENTIFICATION	1	1
- 33	VM911M2H	. . LIGHT ASSY,FLAP POSITION.	1	1
- 34	VM911M3H	. . LIGHT ASSY,FLAP POSITION.	1	1
- 35	A-8970-1-327	. . FIXTURE,INSTRUMENT LIGHTING	27	1
- 36	A-8975-1-327	. . FIXTURE,INSTRUMENT LIGHTING	2	1
- 37	A-8970-2-327	. . FIXTURE,INSTRUMENT LIGHTING	4	1
	95-324035-3	. . PANEL ASSY,CIRCUIT BREAKER.	1	2
	95-324007-11	. . PANEL ASSY,CIRCUIT BREAKER.	1	3
		/ATTACHING PARTS/		
- 38	AN507-632	. . SCREW	6	
		----*----		
- 39	95-324035-5	. . . PANEL,CIRCUIT BREAKER	1	1
- 40	D7270-6-5	. . . BREAKER,CIRCUIT	6	1
- 41	D7270-6-15	. . . BREAKER,CIRCUIT	2	1
- 42	D7270-6-20	. . . BREAKER,CIRCUIT	1	1
- 43	8906K753	. . . BREAKER,CIRCUIT	1	2
	8906K1019	. . . BREAKER,CIRCUIT	1	3
- 44	8906K762	. . . BREAKER,CIRCUIT	2	1
- 45	VM912-4	. . . LIGHT ASSY,COWL FLAP INDICATOR.	1	1
- 46	SS-48152	. . . BUTTON,PLUG	1	1
- 47	MS25010-3A	. . . LIGHT,PANEL	4	1

CODE	EFFECTIVITY	CODE	EFFECTIVITY
1	TD-303 THRU TD-452	2	TD-303 THRU TD-402
3	TD-403 THRU TD-452		

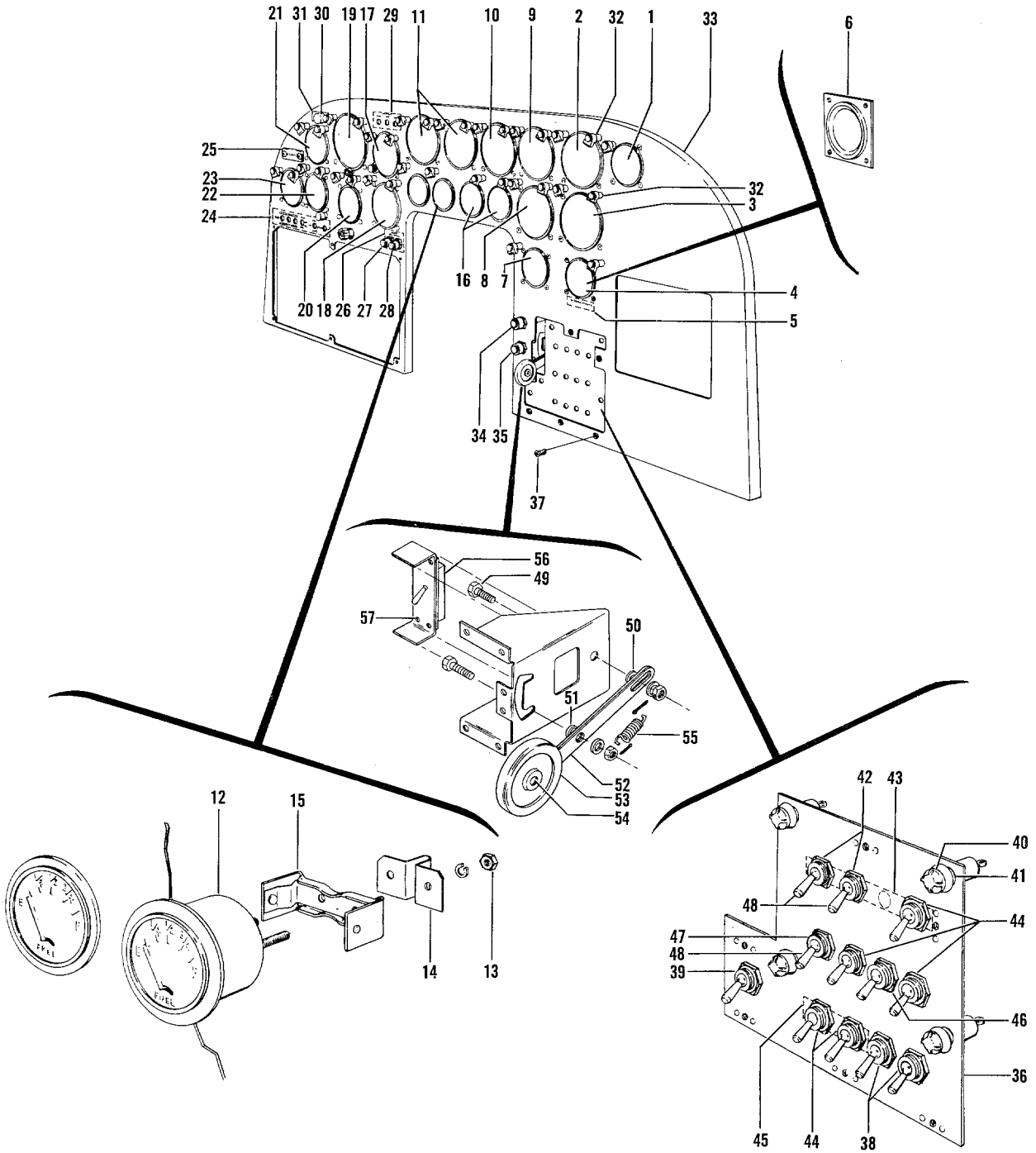

Figure 61B. Floating Instrument Panel (TD-453 thru TD-533)

FIG. & INDEX NO.	PART NO.	DESCRIPTION 1 2 3 4 5 6 7	UNITS PER ASSY	USABLE ON CODE
61B-	95-324008-21	PANEL ASSY,B95A INSTRUMENT FLOATING	1	1
	95-324008-23	PANEL ASSY,B95A INSTRUMENT FLOATING	1	1
	95-324008-25	PANEL ASSY,B95A INSTRUMENT FLOATING	1	1
	¤95-554017-35	. MOUNT ASSY,SHOCK.	1	1
	¤95-554017-37	. MOUNT ASSY,SHOCK.	1	1
- 1	¤50-384042-1	. GAGE,SUCTION /SUPERSEDES 95-324035-55,. . . . 22-880-03 AND 35-380041/	1	1
	95-324035-53	. GAGE,SUCTION /USED WITH T3 AUTOPILOT/ . . . . /ATTACHING PARTS/	1	1
	AN507B632R	. SCREW . . . . . ----*----	4	
- 2	¤95-380020	. GAGE,OIL PRESSURE /SUPERSEDES 95-324011-51/ . /ATTACHING PARTS/	1	1
	AN507B632R	. SCREW . . . . . ----*----	4	
- 3	¤95-380014-1	. GAGE,OIL TEMPERATURE. . . . . /SUPERSEDES 95-324011-43/ /ATTACHING PARTS/	1	1
	AN507B632R	. SCREW . . . . . ----*----	4	
- 4	¤50-380027	. GAGE ASSY,DEICER PRESSURE . . . . . /SUPERSEDES 3D1133-2/ /ATTACHING PARTS/	1	1
	AN507B632R	. SCREW . . . . . ----*----	4	
- 5	¤95-970012	. PLACARD,DEICER PRESSURE GAGE.	1	1
- 6	95-324008-43	. BEZEL,ANTI-ICER QUANTITY GAGE	1	1
- 7	¤50-384001-31	. GAGE,ANTI-ICER QUANTITY . . . . . /ATTACHING PARTS/	1	1
	AN507B632R	. SCREW . . . . . ----*----	4	
- 8	¤95-380016-1	. INDICATOR,CYLINDER HEAD TEMPERATURE . . . . . /SUPERSEDES 95-324011-33/ /ATTACHING PARTS/	1	1
	AN507B632R	. SCREW . . . . . ----*----	4	
- 9	¤96-380024	. GAGE,FUEL PRESSURE /SUPERSEDES 95-324011-49 . AND 96-324010-5/ /ATTACHING PARTS/	1	1
	AN507B632R	. SCREW . . . . . ----*----	4	
- 10	¤50-380011-19	. INDICATOR,MANIFOLD PRESSURE . . . . . /SUPERSEDES 95-324011-57/ /ATTACHING PARTS/	1	1
	AN507B632R	. SCREW . . . . . ----*----	4	
- 11	35-324365-9	. TACHOMETER /SUPERSEDES 95-324011-29/. . . . . /ATTACHING PARTS/	2	1
	AN507B632R	. SCREW . . . . . ----*----	4	
- 12	¤95-380018	. GAGE,FUEL . . . . . /ATTACHING PARTS/	2	1
- 13	¤AN341-10	. NUT	2	
	¤AN935-10	. WASHER. . . . . ----*----	2	
- 14	1515642	. SEPARATOR,FUEL GAGE TERMINAL.	1	1
- 15	5643295	. CLAMP,FUEL GAGE MOUNTING.	1	1
- 16	¤95-380017	. AMMETER /SUPERSEDES 1500859/. . . . . /ATTACHING PARTS/	2	1
	AN507B632R	. SCREW . . . . . ----*----	4	
- 17	¤50-380094-9	. ALTIMETER /SUPERSEDES 95-324035-61 AND. . . . 35-380037-1/ /ATTACHING PARTS/	1	1
	AN507B632	. SCREW . . . . . ----*----	4	

FIG. & INDEX NO.	PART NO.	DESCRIPTION 1 2 3 4 5 6 7	UNITS PER ASSY	USABLE ON CODE
61B- 18	¤35-380044	. INDICATOR,RATE OF CLIMB . . . . . /SUPERSEDES 95-324035-65/ /ATTACHING PARTS/	1	1
	AN507B632R	. SCREW	4	
		----*----		
- 19	¤35-380043-1	. GYRO-HORIZON /SUPERSEDES 95-324011-53/. . . . /ATTACHING PARTS/	1	1
	AN507B1032R	. SCREW	4	
		----*----		
- 20	¤35-380039-1	. GYRO,DIRECTIONAL /SUPERSEDES 95-324035-59/. . /ATTACHING PARTS/	1	1
	AN507B1032R	. SCREW	4	
		----*----		
- 21	95-324011-59	. INDICATOR,AIRSPEED /SUPERSEDES 95-324011-27/. /ATTACHING PARTS/	1	1
	AN507B632	. SCREW	4	
		----*----		
- 22	¤50-380024	. INDICATOR,TURN & BANK . . . . . /SUPERSEDES 95-324011-55/ /ATTACHING PARTS/	1	1
	AN507B632R	. SCREW	4	
		----*----		
- 23	NO NUMBER	. COMPASS,RADIO	1	1
- 24	¤95-324061	. PLACARD,RADIO CONTROL SWITCH IDENTIFICATION .	1	1
- 25	95-324005-33	. PLACARD,RADIO CALL. . . . . /ATTACHING PARTS/	1	1
	¤AN530-2R4	. SCREW	2	
		----*----		
- 26	95-324059	. PLACARD,FLAP POSITION LIGHTS IDENTIFICATION .	1	1
- 27	¤VM911M3H	. LIGHT ASSY,FLAP UP POSITION	1	1
- 28	¤VM911M2H	. LIGHT ASSY,FLAP DOWN POSITION	1	1
- 29	¤95-324063	. PLACARD,MARKER BEACON LIGHTS IDENTIFICATION .	1	1
- 30	¤VM912M6	. LIGHT ASSY,STALL WARNING.	1	1
- 31	95-324060	. PLACARD,STALL WARNING IDENTIFICATION.	1	1
- 32	¤A8970-1-327	. FIXTURE,INSTRUMENT LIGHTING	36	1
- 33	¤95-324005-43	. PANEL,B95A INSTRUMENT FLOATING /BLANK/. . . .	1	1
- 34	¤VM911M2H	. LIGHT ASSY,LANDING GEAR SWITCH.	1	1
- 35	¤VM911M3H	. LIGHT ASSY,LANDING GEAR SWITCH.	1	1
	95-324008-15	. PANEL ASSY,CIRCUIT BREAKER. . . . . /USED WITH 95-324008-21/	1	1
	95-324008-11	. PANEL ASSY,CIRCUIT BREAKER. . . . . /USED WITH 95-324008-23/	1	1
	95-324008-9	. PANEL ASSY,CIRCUIT BREAKER. . . . . /USED WITH 95-324008-25/	1	1
- 36	¤95-324035-5	. . PANEL,CIRCUIT BREAKER . . . . . /ATTACHING PARTS/	1	1
- 37	AN507-632	. . SCREW	6	
		----*----		
- 38	¤AN3027-3	. . SWITCH.	2	1
- 39	¤MS25068-23	. . SWITCH /SUPERSEDES MS25068-3/	1	1
- 40	¤MS25010-3A	. . LIGHT,CIRCUIT BREAKER PANEL	4	1
- 41	100696S-YP003	. . SPACER,CIRCUIT BREAKER PANEL LIGHT.	4	1
- 42	CB3115	. . BREAKER,CIRCUIT	2	1
- 43	114931-1-4	. . STRIP,TERMINAL.	1	1
- 44	¤CB3105B	. . BREAKER,CIRCUIT /SUPERSEDES CB3105/	5	1
- 45	114931-1-2	. . STRIP,TERMINAL.	1	1
- 46	NO NUMBER	. . BREAKER,CIRCUIT	1	1
- 47	CB3120	. . BREAKER,CIRCUIT	1	1
- 48	¤156-10	. SLEEVE,BAT HANDLE	13	1

FIG. & INDEX NO.	PART NO.	DESCRIPTION 1 2 3 4 5 6 7	UNITS PER ASSY	USABLE ON CODE
61B-	¤95-324012	SWITCH ASSY,LANDING GEAR.	1	1
	95-324012-13	. ARM ASSY,LANDING GEAR SWITCH.	1	1
		/ATTACHING PARTS/		
- 49	¤AN3-4/M/	. BOLT.	2	
- 50	¤100696X-ZC002	. SPACER.	1	
- 51	¤100696X-ZC004	. SPACER.	1	
	¤AN960-10	. WASHER.	2	
	100951S062ZL	. WASHER.	2	
	¤AN310-3	. NUT	2	
	¤AN380-2-3	. PIN,COTTER.	2	
		----*----		
- 52	95-324012-11	. . BRAZE ASSY,LANDING GEAR SWITCH.	1	1
- 53	95-324012-15	. . KNOB,LANDING GEAR SWITCH.	2	1
		/ATTACHING PARTS/		
- 54	NO NUMBER	. . SCREW,3/8 INCH.	1	
		----*----		
- 55	¤734-183864	. SPRING,LANDING GEAR SWITCH.	1	1
- 56	¤AN3022-3	. SWITCH,LANDING GEAR	1	1
		/ATTACHING PARTS/		
- 57	AN515-6-4	. SCREW	2	
		----*----		

CODE EFFECTIVITY

1 TD-453 THRU TD-533

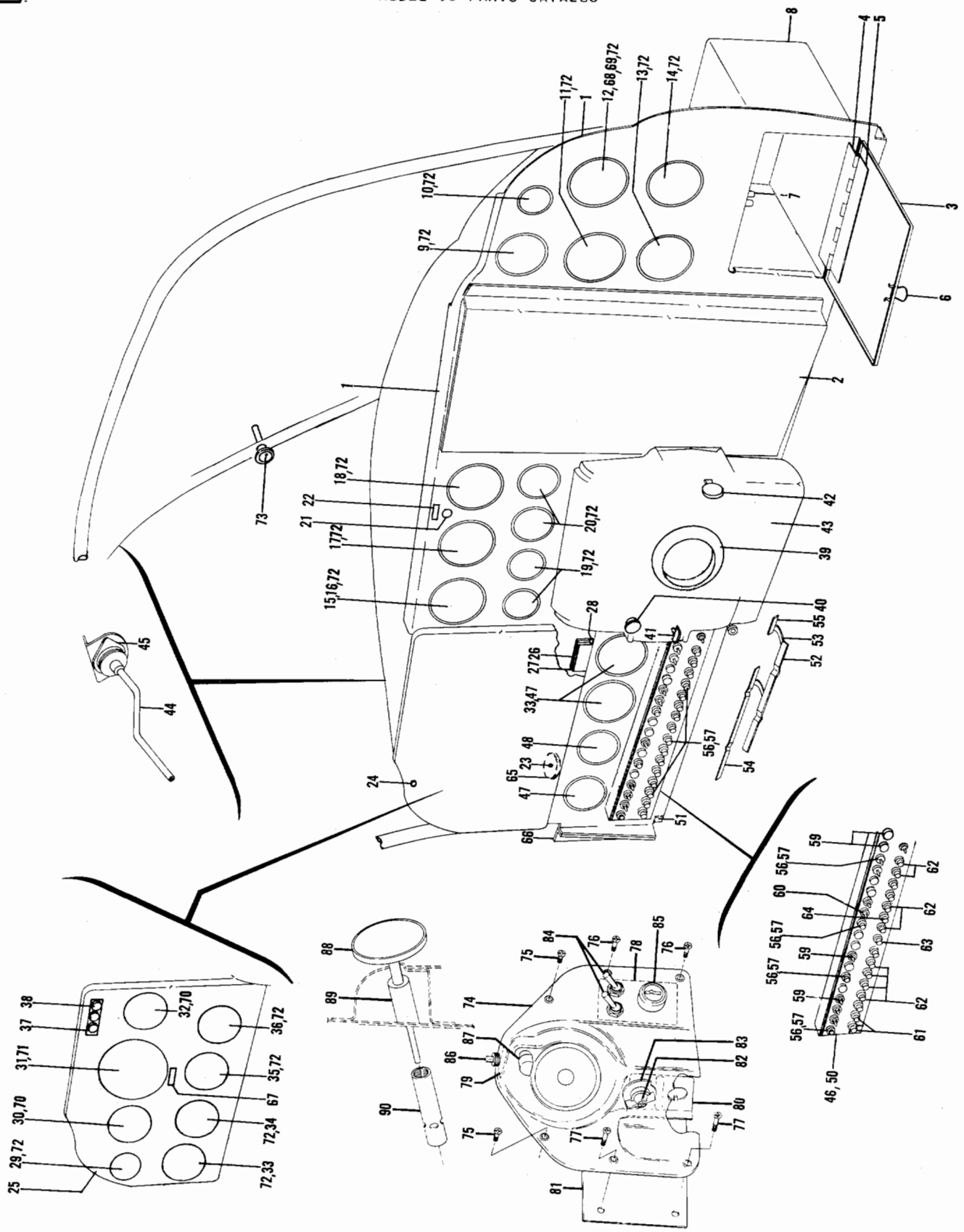

Figure 61C. Floating Instrument Panel (TD-534 and After)

FIG. & INDEX NO.	PART NO.	DESCRIPTION 1 2 3 4 5 6 7	UNITS PER ASSY	USABLE ON CODE
61C-	95-324000	PANEL INSTL,INSTRUMENT /WITH DUAL TACHOMETER/ .	NP	10
	95-324009-5	PANEL INSTL,INSTRUMENT /WITH DUAL TACHOMETER/ .	NP	11
	95-324000-1	PANEL INSTL,INSTRUMENT /WITH DUAL TACHOMETER &. ALTERNATOR/	NP	10
	95-324009	PANEL INSTL,INSTRUMENT /WITH DUAL TACHOMETER &. ALTERNATOR/	NP	11
	95-324000-3	PANEL INSTL,INSTRUMENT /TWO SINGLE TACHOMETERS/	NP	10
	95-324009-9	PANEL INSTL,INSTRUMENT /TWO SINGLE TACHOMETERS/	NP	11
	95-324000-5	PANEL INSTL,INSTRUMENT /TWO SINGLE TACHOMETERS. & ALTERNATOR/	NP	10
	95-324009-7	PANEL INSTL,INSTRUMENT /TWO ISNGLE TACHOMETERS. & ALTERNATOR/	NP	11
- 1	96-324030-7	. PANEL,RH MAIN	1	10
	96-324030-35	. PANEL,RH MAIN . . . . . /ATTACHING PARTS/	1	11
	AN520-10R	. SCREW	4	
	NAS387-1032	. SCREW . . . . . ----*----	4	
- 2	¤96-340025	. PANEL,RADIO ADAPTER . . . . . /ATTACHING PARTS/	1	1
	NAS387-1032	. SCREW . . . . . ----*----	7	
	¤95-324038-63	. DOOR ASSY,GLOVE BOX	1	10
	96-324056-3	. DOOR ASSY,GLOVE BOX . . . . . /ATTACHING PARTS/	1	11
	¤AN253-2-513	. PIN,HINGE . . . . . ----*----	1	
- 3	95-324038-65	. . DOOR.	1	10
	96-324056-5	. . DOOR.	1	11
- 4	95-324038-39	. . HINGE,PANEL HALF.	1	1
- 5	95-324038-37	. . HINGE,DOOR HALF	1	1
- 6	¤35-324204	. KNOB.	1	/
	50-534481-7	. HANDLE. . . . . /ATTACHING PARTS/	1	11
	AN530-6R7	. SCREW . . . . . ----*----	1	
- 7	¤5 ROLLER	. CATCH ASSY. . . . . /ATTACHING PARTS/	1	1
	AN515-6R	. SCREW	1	
	¤AN960-6	. WASHER.	1	
	¤MS20365-632	. NUT . . . . . ----*----	1	
- 8	¤95-324038-29	. BOX ASSY,GLOVE. . . . . /ATTACHING PARTS/	1	1
	AN530-6-4	. SCREW	9	
	A6500-6Z1	. NUT . . . . . ----*----	9	
- 9	¤50-384052	. GAGE,SUCTION. . . . . /SUPERSEDES 50-384042-3/	1	1
	1G4-3	. GAGE,PRESSURE	1	11
- 10	95-324008-43	. BEZEL	1	1
- 11	¤95-380020	. GAGE,OIL PRESSURE	1	1
- 12	50-324104	. BEZEL	1	I
- 13	¤95-380016-1	. INDICATOR,CYLINDER HEAD TEMPERATURE	1	1
- 14	¤95-380014-1	. INDICATOR,OIL TEMPERATURE	1	1
- 15	¤95-380019	. TACHOMETER /DUAL/	1	1
- 16	35-324365-9	. TACHOMETER /SINGLE/	2	1
- 17	¤50-380011-19	. GAGE,MANIFOLD PRESSURE.	1	1
- 18	95-380015-3	. METER,FUEL FLOW /USE WITH DUAL TACH/.	1	1
- 19	¤95-380018	. GAGE,FUEL QUANTITY.	2	1
- 20	¤95-380017-1	. AMMETER /USE WITHOUT ALTERNATOR/. . . . . /SUPERSEDES 1500859/	2	1
	95-380017-3	. AMMETER /USE WITH ALTERNATORS/.	2	10
	95-380017	. AMMETER /USE WITH ALTERNATORS/.	2	11
	AN507B1032R	. SCREW	AR	1
	AN507B632R	. SCREW	AR	1

FIG. & INDEX NO.	PART NO.	DESCRIPTION 1 2 3 4 5 6 7	UNITS PER ASSY	USABLE ON CODE
61C- 21	¤MS25041-6	. LAMP,OVER VOLTAGE WARNING	1	1
		/USED WITH ALTERNATOR ONLY/		
- 22	¤96-324069	. PLACARD,OVER VOLTAGE WARNING.	1	1
- 22A	96-324117	. PLACARD,RADIO CIRCUIT BREAKER	1	2
	96-324032-3	. PANEL ASSY,FLOATING	1	6
	96-324032-7	. PANEL ASSY,FLOATING	1	7
	96-324122-1	. PANEL ASSY,FLOATING	1	
		/ATTACHING PARTS/		
- 23	¤AN4-12A/M/	. BOLT.	2	
	¤AN8013D2	. WASHER.	2	
	¤MS20365-428	. NUT /SUPERSEDES AN365-428/.	2	
- 24	NAS387-1032	. SCREW	3	
		----*----		
	96-324033	. . PANEL ASSY,FLOATING	1	10
	96-324123-1	. . PANEL ASSY,FLOATING	1	11
- 25	¤96-324033-1	. . . PANEL,BLANK	1	10
- 26	¤414-183761-5	. . . HINGE,PANEL HALF.	2	1
- 27	¤414-183802-3	. . . HINGE ASSY,SUPPORT HALF	2	1
- 28	¤102361-00128	. . . PIN,HINGE	2	1
- 29	¤50-380013-5	. . CLOCK	1	1
- 30	¤50-384024-17	. . INDICATOR,AIR SPEED	1	1
- 31	¤35-380043-1	. . GYRO HORIZON.	1	10
	96-380039	. . GYRO HORIZON.	1	11
- 32	¤50-380094-9	. . ALTIMETER /SUPERSEDES 35-380037-1/.	1	
- 33	¤50-324103-1	. . BEZEL	1	1
- 34	¤50-380024	. . INDICATOR,TURN & BANK	1	
	¤1680	. . COORDINATOR,TURN.	1	9
- 35	35-380029-1	. . GYRO,DIRECTIONAL.	1	10
	18-380021-3	. . GYRO,DIRECTIONAL.	1	11
- 36	¤35-380044-1	. . INDICATOR,RATE OF CLIMB	1	10
	50-384073	. . INDICATOR,RATE OF CLIMB	1	11
- 37	¤95-324063	. . PLACARD,MARKER BEACON LIGHTS.	1	1
	AN507B1032R	. . SCREW	8	1
	AN507B632R	. . SCREW	21	1
- 38	¤48152	. . PLUG BUTTON	3	1
	¤AN365B632A	. . NUT	4	1
- 39	35-524125	. HANGER,CONTROL COLUMN /SEE FIG. 58A/.	1	10
	35-524125-4	. HANGER,CONTROL COLUMN	1	11
		/ATTACHING PARTS/		
	¤AN507-832R10	. SCREW	3	
		----*----		
- 40	50-320148	. KNOB,FRICTION LOCK /SEE FIG. 58A/	1	1
- 41	¤118664	. KNOB,FLAP CONTROL /SEE FIG. 58A/.	1	1
- 42	¤118665	. KNOB,LANDING GEAR /SEE FIG. 58A/.	1	1
- 43	96-324036-11	. COVER ASSY,CONSOLE /SEE FIG. 58A/	1	4
	96-324102-5	. COVER ASSY,CONSOLE.	1	5
	96-324102-15	. COVER ASSY,CONSOLE.	1	11
- 44	¤96-324029-5	. ROD,SHOCK MOUNT	1	10
	95-324009-1	. ROD ASSY,SHOCK MOUNT.	1	11
		/ATTACHING PARTS/		
	AN8013-2	. WASHER.	2	
	¤AN316-4R	. NUT	4	
		----*----		
- 45	¤150PDL12	. MOUNT,SHOCK	3	1
		/ATTACHING PARTS/		
	AN515-8	. SCREW	2	
	¤AN960-8	. WASHER.	2	
	¤MS20365-832	. NUT /SUPERSEDES AN365-832/.	2	
		----*----		
- 46	96-324034-19	. SWITCH PANEL,EDGE LIGHTED /USED WITHOUT . . .	1	1
		ALTERNATOR/ /SUPERSEDES 96-324034-3/		
	96-324034-21	. SWITCH PANEL,EDGE LIGHTED /USED WITH	1	1
		ALTERNATOR/ /SUPERSEDES 96-324034-5/		

FIG. & INDEX NO.	PART NO.	DESCRIPTION 1 2 3 4 5 6 7	UNITS PER ASSY	USABLE ON CODE
61C-	95-324069	. PANEL ASSY,LH SUB	1	6
		/USED WITH TWO SINGLE TACHOMETERS/		
	95-324069-3	. PANEL ASSY,LH SUB	1	7
	95-324125-3	. PANEL ASSY,LH SUB	1	11
		/USED WITH TWO SINGLE TACHOMETERS/		
	95-324069-1	. PANEL ASSY,LH SUB /USED WITH DUAL TACHOMETER/	1	6
	95-324069-5	. PANEL ASSY,LH SUB /USED WITH DUAL TACHOMETER/	1	7
	95-324125-5	. PANEL ASSY,LH SUB /USED WITH DUAL TACHOMETER/	1	11
		/ATTACHING PARTS/		
	AN509-10R	. SCREW	3	
	AN520-10R	. SCREW	5	
	¤AN960-10	. WASHER.	3	
	¤MS20365-1032	. NUT	3	
		----*----		
- 47	¤50-324103-1	. . BEZEL	3	1
- 48	95-380015-3	. . METER,FUEL FLOW	1	1
		/USED WITH TWO SINGLE TACHOMETERS/		
	AN507B632R	. . SCREW	AR	1
- 49		. . DELETED		
- 50	96-324031	. . PANEL /USED WITH TWO SINGLE TACHOMETERS/. .	1	7
	96-324127-7	. . PANEL /USED WITH TWO SINGLE TACHOMETERS/. .	1	11
	96-324031-1	. . PANEL /USED WITH DUAL TACHOMETER/	1	7
	96-324127-9	. . PANEL /USED WITH DUAL TACHOMETER/	1	11
	96-324055-3	. . BOARD ASSY,PRINTED CIRCUIT.	1	11
- 51	¤PSM3N	. . BREAKER,CIRCUIT	1	7
	109-250-104	. . BREAKER,CIRCUIT /USED ON -3 ASSY/	1	11
	109-230-104	. . BREAKER,CIRCUIT /USED ON -5 ASSY/	1	11
- 52	114931-1-13	. . STRIP,TERMINAL.	1	7
	114931-1-16	. . SKIP,TERMINAL	1	11
- 53	114931-1-3	. . STRIP,TERMINAL.	2	7
	114931-1-6	. . STRIP,TERMINAL.	2	11
- 54	114931-1-11	. . STRIP,TERMINAL /USED WITHOUT ALTERNATORS/ .	1	
	114931-1-10	. . STRIP,TERMINAL /USED WITH ALTERNATORS/. . .	1	1
- 55	114931-1-2	. . STRIP,TERMINAL.	1	1
- 56	¤MS25010-3A	. . LIGHT ASSY.	7	7
- 57	¤327	. . LAMP.	7	7
- 58	¤CB3120C	. . BREAKER,CIRCUIT /SUPERSEDES CB3120A/. . . .	1	1
- 59	¤CB3105C	. . BREAKER,CIRCUIT /SUPERSEDES CB3105A/. . . .	4	7
	113-205-102	. . BREAKER,CIRCUIT	2	11
- 60	¤CB3110C	. . BREAKER,CIRCUIT /SUPERSEDES CB3110A/. . . .	1	1
- 61	¤CB2330A	. . BREAKER,CIRCUIT /USED WITH 25 AMP GEN./ . .	2	1
	¤CB2350A	. . BREAKER,CIRCUIT /USE WITH 40 AMP GEN./. . .	2	1
- 62	¤CB2305A	. . BREAKER,CIRCUIT	8	1
- 63	¤CB2330A	. . BREAKER,CIRCUIT	1	1
- 64	¤CB2315A	. . BREAKER,CIRCUIT	1	1
- 65	¤150PL8	. . SHOCK MOUNT /SUPERSEDES AN8008D10/.	2	1
		/ATTACHING PARTS/		
	AN520-8R	. . SCREW	4	
	¤MS20365-832	. . NUT /SUPERSEDES AN365-832/.	4	
		----*----		
- 66	96-324029-1	. ANGLE	1	1
		/ATTACHING PARTS/		
	AN520-10R	. SCREW	3	
		----*----		
- 67	95-324005-33	. PLATE,RADIO CALL.	1	1
		/ATTACHING PARTS/		
	¤AN530-2R4	. SCREW	2	
		----*----		
- 68	¤MI990	METER,FLIGHT HOUR	1	1
		/ATTACHING PARTS/		
	AN507B832	SCREW	4	
	AN960B8	WASHER.	4	
	MS20365B832	NUT	4	
		----*----		

FIG. & INDEX NO.	PART NO.	DESCRIPTION 1 2 3 4 5 6 7	UNITS PER ASSY	USABLE ON CODE
61C-	95-324074-1	ADAPTER,FLIGHT HOUR METER	1	1
- 69	¤MI986	METER,ENGINE HOUR	1	1
		/ATTACHING PARTS/		
	AN507B832	SCREW	4	
	AN960B8	WASHER	4	
	MS20365B832	NUT	4	
		----*----		
	95-324074-1	ADAPTER,ENGINE HOUR METER	1	1
	96-364015	LIGHT INSTL,INSTRUMENT POST	NP	7
	96-364054-5	LIGHT INSTL,INSTRUMENT POST	NP	11
- 70	¤A8970-2-327	. LIGHT,POST	4	7
- 71	¤A8975-1-327	. LIGHT,POST	2	7
- 72	¤A8970-1-327	. LIGHT,POST	28	7
	A8970B2-327	. LIGHT,POST	34	11
- 73	¤35-380019-3	INDICATOR,OUTSIDE AIR TEMP	1	3
	35-410291-187	WASHER	1	3
	¤35-410291-183	SPACER	1	3
	¤35-410474-53	SPACER	1	3
- 74	96-364060-3	ESCUTCHEON ASSY,IGNITION SWITCH AND OAT INDICATOR /USED WITH GENERATORS/	1	11
	96-364060-5	ESCUTCHEON ASSY,IGNITION SWITCH AND OAT INDICATOR /USED WITH ALTERNATORS/	1	11
		/ATTACHING PARTS/		
- 75	NAS387-632-20P	SCREW,UPPER	2	
- 76	NAS387-632-18P	SCREW,FWD	2	
- 77	NAS387-632-14P	SCREW,AFT	2	
	A6194-6Z1	NUT /UPPER SCREWS ONLY/	2	
	NAS391B6P	WASHER	6	
		----*----		
- 78	96-364038-1	. PLACARD,BATTERY AND GENERATOR SWITCH	1	11
	96-364038-3	. PLACARD,BATTERY AND ALTERNATOR SWITCH	1	11
- 79	96-364061	. PLACARD,OAT AND COMPASS LIGHT SWITCH	1	11
- 80	95-364029-3	. BRACKET,IGNITION SWITCH	1	11
	95-364060-7	. ESCUTCHEON	1	11
- 81	95-360000-13	PLATE,INSULATION	1	11
- 82	10-357230-1	SWITCH,IGNITION	2	11
- 83	10-126676	PLACARD,SWITCH	2	11
- 84	35-380053-7	SWITCH,GENERATOR OR ALTERNATOR	2	11
- 85	35-590070-39	SWITCH,BATTERY	1	11
- 86	30-15	SWITCH,OAT AND COMPASS LIGHT	1	11
- 87	A8970B1-327	LIGHT,POST /BLUE/	1	11
	A8970B-1-327	LIGHT,POST /RED/	1	11
	327	. BULB	1	11
	96-324131-9	INDICATOR INSTL,OAT	NP	11
- 88	35-380019-5	. INDICATOR ASSY,OAT	1	11
- 89	96-324131-1	. SUPPORT,INDICATOR	1	11
- 90	96-324131-7	. SHIELD,SUN	1	11

CODE	EFFECTIVITY	CODE	EFFECTIVITY
1	TD-534 AND AFTER	2	TD-699 AND AFTER
3	TD-538 THRU TD-707	4	TD-534 THRU TD-667
5	TD-668 THRU TD-707	6	TD-534 THRU TD-616
7	TD-617 THRU TD-707	8	TD-534 THRU TD-651
9	TD-652 AND AFTER	10	TD-534 THRU TD-707
11	TD-708 AND AFTER		

BLANK PAGE

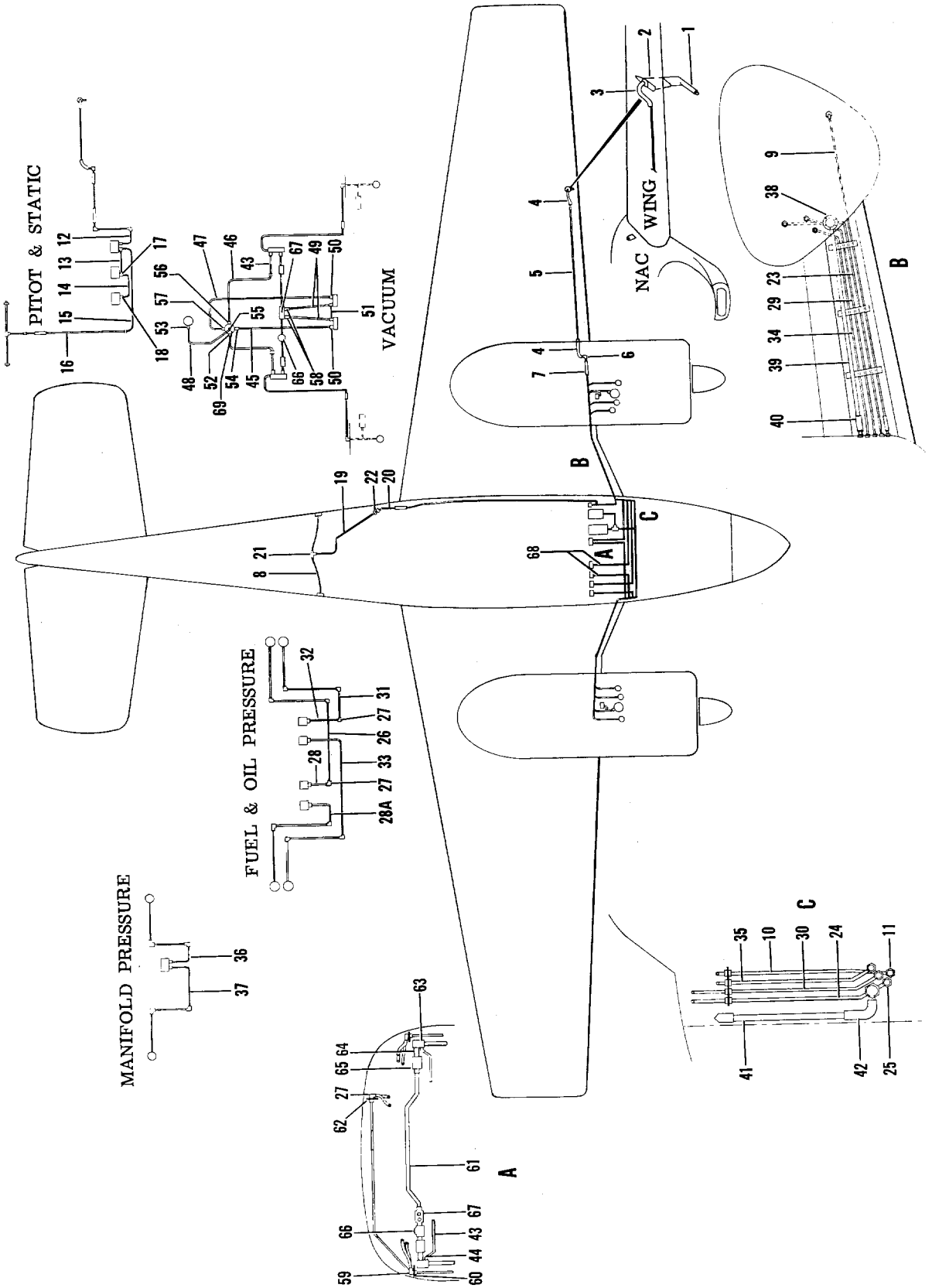

Figure 62. Instrument, Pitot & Static Plumbing (TD-1 thru TD-533)

FIG. & INDEX NO.	PART NO.	DESCRIPTION 1 2 3 4 5 6 7	UNITS PER ASSY	USABLE ON CODE
62	95-324018	PLUMBING INSTL,INSTRUMENT PITOT & STATIC. . . .	NP	7
- 1	¤50-384040	. TUBE,PITOT /SUPERSEDES AN5812-1/.	1	7
		/ATTACHING PARTS/		
	AN507-640R4	. SCREW	4	
		----*----		
- 2	¤95-324018-151	. MAST ASSY,PITOT PRESSURE LH	1	7
	95-324076-601	. MAST ASSY,PITOT PRESSURE RH	1	7
		/ATTACHING PARTS/		
	¤AN507-832R8	. SCREW	4	
		----*----		
- 3	¤35-361109	. TUBE ASSY,HEATED PITOT.	1	7
- 4	¤95-324018-143	. HOSE,FLEXIBLE CONNECTING.	2	7
- 5	95-324018-3	. TUBE,PITOT PRESSURE OUTBD	1	7
- 6	AN848-4D	. ELBOW	1	7
- 7	¤95-324018-135	. HOSE,FLEXIBLE CONNECTING.	1	7
	AN931A4-7	. GROMMET	1	7
	35-324092	. TUBE ASSY,STATIC PRESSURE LH.	1	1
	35-324091	. TUBE ASSY,STATIC PRESSURE RH.	1	1
- 8	95-324018-213	. TUBE ASSY,STATIC PRESSURE	2	2
- 9	95-324018-65	. TUBE,PITOT PRESSURE INBD.	1	7
- 10	95-324018-7	. TUBE ASSY,PITOT & STATIC.	1	7
- 11	AN846-4D	. FITTING	1	7
		/ATTACHING PARTS/		
	¤AN924-4D	. NUT	1	
	¤AN960-716	. WASHER.	1	
		----*----		
- 12	¤AN6270-4-12	. HOSE ASSY,LOW PRESSURE.	1	7
	95-324018-15	. TUBE ASSY,PITOT PRESSURE.	1	1
- 13	95-324018-201	. TUBE ASSY,PITOT PRESSURE.	1	2
	95-324018-11	. TUBE ASSY,STATIC PRESSURE	1	1
- 14	95-324018-205	. TUBE ASSY,STATIC PRESSURE	1	2
- 15	95-324018-145	. TUBE ASSY,STATIC PRESSURE FWD	1	7
- 16	95-324018-25	. TUBE,STATIC PRESSURE REAR	1	7
- 17	¤AN826-4D	. TEE	2	7
- 18	¤AN816-4D	. NIPPLE.	2	7
	35-324093	. TUBE ASSY,STATIC PRESSURE	1	1
- 19	95-324018-211	. TUBE ASSY,STATIC PRESSURE	1	2
- 20	35-324098	. TUBE ASSY,STATIC PRESSURE	1	7
- 21	¤AN824-4D	. TEE	1	7
- 22	¤AN815-4D	. UNION	1	7
- 23	¤95-324018-27	. TUBE ASSY,FUEL PRESSURE LH.	1	7
	95-324018-19	. TUBE ASSY,FUEL PRESSURE RH.	1	7
- 24	95-324018-67	. TUBE ASSY,FUEL PRESSURE LH.	1	7
	95-324018-71	. TUBE ASSY,FUEL PRESSURE RH.	1	7
- 25	¤AN837-4D	. ELBOW	3	7
	¤AN924-4D	. NUT	3	7
	¤AN960-716	. WASHER.	3	7
- 26	95-324018-39	. TUBE ASSY,FUEL PRESSURE	1	7
- 27	¤AN833-4D	. ELBOW	2	7
	¤AN924-4D	. NUT	2	7
	¤AN960-716	. WASHER.	2	7
- 28	¤AN6270-4-20	. HOSE ASSY.FUEL PRESSURE	1	7
- 28A	AN6270-4-17	. HOSE ASSY,FUEL PRESSURE	1	7
- 29	95-324018-31	. TUBE ASSY,OIL PRESSURE LH	1	7
	95-324018-43	. TUBE ASSY,OIL PRESSURE RH	1	7
- 30	95-324018-35	. TUBE ASSY,OIL PRESSURE LH	1	7
	95-324018-107	. TUBE ASSY,OIL PRESSURE RH	1	7
- 31	95-324018-79	. TUBE ASSY,OIL PRESSURE.	1	7
- 32	AN6270-4-17	. HOSE ASSY,OIL PRESSURE.	1	7
- 33	¤AN6270-4-15	. HOSE ASSY,OIL PRESSURE.	1	7
- 34	¤95-324018-111	. TUBE ASSY,MANIFOLD PRESSURE LH.	1	7
	95-324018-113	. TUBE ASSY,MANIFOLD PRESSURE RH.	1	7
- 35	95-324018-115	. TUBE ASSY,MANIFOLD PRESSURE LH.	1	7
	95-324018-119	. TUBE ASSY,MANIFOLD PRESSURE RH.	1	7
- 36	AN6270-4-25	. HOSE ASSY,LOW PRESSURE LH	1	7
- 37	¤AN6270-4-20	. HOSE ASSY,LOW PRESSURE RH	1	3
	AN6270-4-27	. HOSE ASSY,LOW PRESSURE RH	1	4
	¤AN822-10D	. ELBOW	1	7

FIG. & INDEX NO.	PART NO.	DESCRIPTION 1 2 3 4 5 6 7	UNITS PER ASSY	USABLE ON CODE
62 - 38	◻203886-2	FITTING	1	7
	95-324018-137	SPACER	2	7
		/ATTACHING PARTS/		
	AN515-8	SCREW	5	
	◻MS20365-832	NUT /SUPERSEDES AN365-832/	5	
		----*----		
- 39	106200H10-26	TUBE ASSY,VACUUM	1	7
		/ORDER 5/8 ID MIL6000 X 6 1/2 IN./		
- 40	106200H10-26	HOSE,CONNECTING	1	7
		/ORDER 5/8 ID MIL6000 X 6 1/2 IN./		
	◻AN737TW34	CLAMP	2	7
- 41	95-324018-47	TUBE ASSY,VACUUM SYSTEM LH	1	7
	95-324018-55	TUBE ASSY,VACUUM SYSTEM RH	1	7
- 42	106200H10-15	HOSE,CONNECTING	1	7
		/ORDER 5/8 ID MIL6000 X 3 3/4 IN./		
	◻AN737TW34	CLAMP	2	7
- 43	95-324018-87	TUBE ASSY,VACUUM SYSTEM LH	1	7
	95-324018-83	TUBE ASSY,VACUUM SYSTEM RH	1	7
- 44	◻AN823-4D	ELBOW	2	7
	95-324018-99	TUBE ASSY,GYRO HORIZON VACUUM	1	1
- 45	95-324018-195	TUBE ASSY,GYRO HORIZON VACUUM	1	2
- 46	95-324018-147	TUBE ASSY,VACUUM SYSTEM	1	7
	95-324018-149	TUBE ASSY,VACUUM SYSTEM	1	7
	95-324018-95	TUBE ASSY,DIRECTIONAL GYRO	1	1
- 47	95-324018-191	TUBE ASSY,DIRECTIONAL GYRO	1	2
- 48	95-324018-91	TUBE ASSY,SUCTION GAGE	1	7
- 49	AN6270-6-14	HOSE ASSY,LOW PRESSURE	2	7
- 50	◻AN822-2D	ELBOW	1	7
	◻AN912-1D	BUSHING,REDUCER	1	7
- 51	◻AN823-6D	ELBOW	2	7
	◻AN912-1D	BUSHING,REDUCER	1	7
- 52	◻AN842-4D	ELBOW	1	7
- 53	◻AN816-2D	CONNECTOR	1	7
- 54	◻AN822-2D	ELBOW	1	7
- 55	◻AN816-2D	CONNECTOR	1	7
- 56	◻AN842-4D	ELBOW	1	7
- 57	◻AN822-2D	ELBOW	1	7
- 58	◻AN816-6D	CONNECTOR	2	7
- 59	◻AN837-4D	ELBOW	2	7
	◻AN924-4D	NUT	2	7
	◻AN960-716	WASHER	2	7
- 60	95-324018-141	BRACKET,TUBE SUPPORT	1	7
- 61	95-324018-75	TUBE ASSY,MANIFOLD PRESSURE	1	5
	95-324018-187	TUBE ASSY,MANIFOLD PRESSURE	1	6
- 62	95-324018-139	BRACKET,TUBE SUPPORT	1	7
- 63	◻95-324043-3	MANIFOLD,VACUUM PLUMBING	1	7
- 64	◻AN911-3D	NIPPLE	2	7
- 65	◻2-2844-75	VALVE,CHECK	1	5
	2-1544-84	VALVE,CHECK	1	6
	AN912-8D	BUSHING,REDUCER	2	6
- 66	◻9520	VALVE,RELIEF	1	7
	◻AN913-1D	PLUG,RELIEF VALVE	1	7
- 67	95-324043-1	MANIFOLD,VACUUM PLUMBING	1	7
	95-324028	CABLE INSTL,FLEXIBLE DRIVE SHAFT TACHOMETER	NP	7
- 68	◻156061S	SHAFT,TACHOMETER FLEXIBLE DRIVE	1	7
- 69	◻711-421-1/8	VALVE,VACUUM SELECTOR /SEE FIG. 58 FOR NHA/	1	7

CODE	EFFECTIVITY	CODE	EFFECTIVITY
1	TD-1 THRU TD-302	2	TD-303 THRU TD-533
3	TD-1 THRU TD-76	4	TD-77 THRU TD-533
5	TD-1 THRU TD-308	6	TD-309 THRU TD-533
7	TD-1 THRU TD-533		

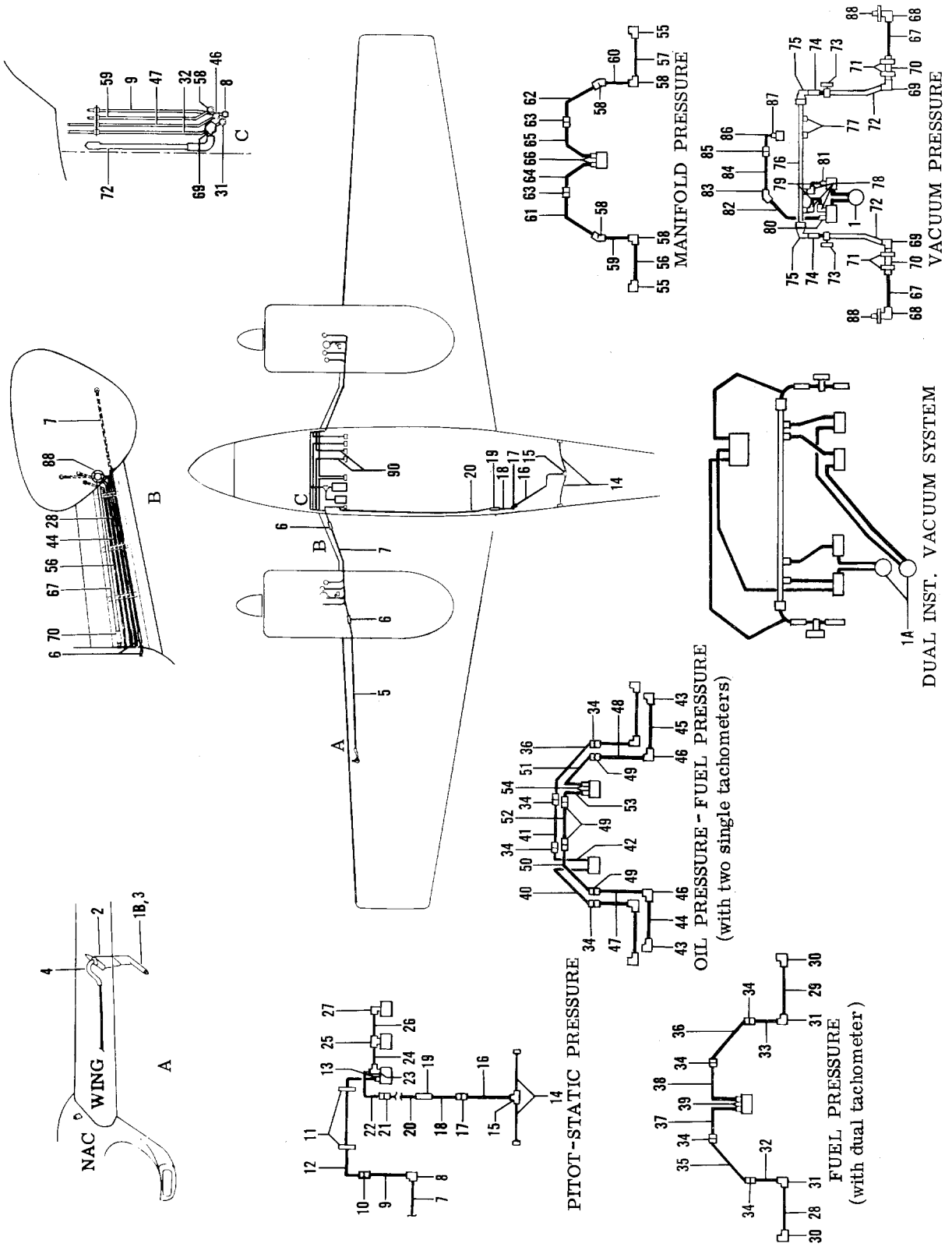

Figure 62A. Instrument, Pitot and Static Plumbing (TD-534 thru TD-707)

FIG. & INDEX NO.	PART NO.	DESCRIPTION 1 2 3 4 5 6 7	UNITS PER ASSY	USABLE ON CODE
62A-	95-324072	PLUMBING INSTL,INSTRUMENT . . . . . /DUAL VACUUM,OPTIONAL PANEL/	NP	1
	95-324072-1	PLUMBING INSTL,INSTRUMENT . . . . . /SINGLE VACUUM,STANDARD PANEL/	NP	1
	95-324072-3	PLUMBING INSTL,INSTRUMENT . . . . . /DUAL VACUUM,STANDARD PANEL/	NP	1
	95-324072-5	PLUMBING INSTL,INSTRUMENT . . . . . /SINGLE VACUUM,OPTIONAL PANEL/	NP	1
	95-324072-57	PLUMBING INSTL,INSTRUMENT /DUAL VACUUM. . . . . AND DUAL INSTRUMENT/	NP	1
- 1	95-324107-1	. CLEANER,GYRO AIR /USED ON 95-324072,. . . . . -1,-3, AND -5 INSTL/	1	1
- 1A	95-324107-3	. CLEANER,GYRO AIR /USED ON 95-324072-57 INSTL/	1	1
- 1B	¤50-384040	. TUBE ASSY,PITOT . . . . . /ATTACHING PARTS/	1	1
	AN520-6R4	. SCREW	4	
		----*----		
- 2	¤95-324018-151	. MAST ASSY,PITOT PRESSURE. . . . . /ATTACHING PARTS/	1	1
	¤AN515-8R8	. SCREW	4	
		----*----		
- 3	¤35-361109	. TUBE ASSY,PITOT HEAD TO HOSE.	1	1
- 4	96-324038-39	. HOSE,PITOT PRESSURE	1	1
- 5	95-324018-221	. TUBE,PITOT PRESSURE	1	1
- 6	¤95-324018-135	. HOSE,PITOT PRESSURE	3	1
- 7	95-324018-223	. TUBE ASSY,PITOT PRESSURE.	1	1
- 8	AN846-4D	. ELBOW	1	1
	¤AN960-716	. WASHER.	1	1
	¤AN924-4D	. NUT	1	1
- 9	95-324018-7	. TUBE ASSY,PITOT PRESSURE.	1	1
- 10	¤AN832-4D	. UNION	2	1
	¤AN960-716	. WASHER.	1	1
	¤AN924-4D	. NUT	1	1
- 11	95-324018-141	. BRACKET,TUBE SUPPORT.	2	1
- 12	AN6270-4	. HOSE ASSY,PITOT PRESSURE.	1	1
- 13	¤AN816-4D	. NIPPLE.	1	1
- 14	95-324018-213	. TUBE ASSY,STATIC PRESSURE	2	1
- 15	¤AN824-4D	. TEE	1	1
- 16	95-324018-211	. TUBE ASSY,STATIC PRESSURE	1	1
- 17	¤AN815-4D	. UNION	1	1
- 18	35-324098	. TUBE ASSY,STATIC PRESSURE	1	1
- 19	35-324323-7	. HOSE,STATIC PRESSURE.	1	1
- 20	95-324018-25	. TUBE ASSY,STATIC PRESSURE	1	2
	96-324038-69	. TUBE ASSY,STATIC PRESSURE	1	3
- 21	¤AN815-4D	. UNION	1	1
- 22	96-324038-37	. HOSE ASSY,STATIC PRESSURE	1	1
- 23	¤AN826-4D	. TEE,AIR SPEED	1	1
- 24	96-324038-35	. TUBE ASSY,STATIC PRESSURE	1	1
- 25	¤AN825-4D	. TEE,ALTIMETER	1	1
- 26	96-324038-5	. TUBE ASSY,STATIC PRESSURE	1	1
- 27	¤AN822-4D	. ELBOW,RATE OF CLIMB	1	1
- 28	95-324018-229	. TUBE ASSY,FUEL PRESSURE LH. . . . . /SUPERSEDES 95-324072-41/	1	1
- 29	95-324018-231	. TUBE ASSY,FUEL PRESSURE RH. . . . . /SUPERSEDES 95-324072-27/	1	1
- 30	AN833-2	. ELBOW,FIREWALL.	2	1
	¤AN960-516L	. WASHER.	2	1
	AN924-2D	. NUT	2	1
- 31	AN837-2D	. ELBOW,FUSELAGE.	2	1
	¤AN960-516	. WASHER.	2	1
	¤AN960-716	. WASHER.	2	1
	AN924-2D	. NUT	2	1
- 32	95-324018-235	. TUBE ASSY,FUEL PRESSURE LH. . . . . /SUPERSEDES 95-324072-39/	1	1
- 33	95-324018-237	. TUBE ASSY,FUEL PRESSURE RH. . . . . /SUPERSEDES 95-324072-29/	1	1

FIG. & INDEX NO.	PART NO.	DESCRIPTION 1 2 3 4 5 6 7	UNITS PER ASSY	USABLE ON CODE
62A- 34	¤AN832-2D	UNION	4	1
	¤AN960-516	WASHER	4	1
	¤AN960-716	WASHER	4	1
	AN924-2D	NUT	4	1
- 35	95-324072-37	TUBE ASSY,FUEL PRESSURE LH /USE WITH DUAL TACHOMETER/	1	1
- 36	95-324072-31	TUBE ASSY,FUEL PRESSURE RH /USE WITH DUAL TACHOMETER/	1	1
- 37	95-324072-35	TUBE ASSY,FUEL PRESSURE LH /USE WITH DUAL TACHOMETER/	1	1
- 38	95-324072-33	TUBE ASSY,FUEL PRESSURE RH /USE WITH DUAL TACHOMETER/	1	1
- 39	AN823-2D	ELBOW	2	1
- 40	95-324072-15	TUBE ASSY,FUEL PRESSURE LH /USE WITH TWO TACHOMETERS/	1	1
- 41	95-324072-49	TUBE ASSY,FUEL PRESSURE RH /USE WITH TWO TACHOMETERS/	1	1
- 42	95-324072-11	TUBE ASSY,FUEL PRESSURE RH /USE WITH TWO TACHOMETERS/	1	1
- 43	¤AN833-4	ELBOW,OIL PRESSURE FIREWALL	2	1
	¤AN960-716	WASHER	2	1
	¤AN924-4	NUT	2	1
- 44	95-324018-31	TUBE ASSY,OIL PRESSURE LH	1	1
- 45	95-324018-43	TUBE ASSY,OIL PRESSURE RH	1	1
- 46	¤AN837-4D	ELBOW	2	1
	¤AN960-716	WASHER	2	1
	¤AN924-4D	NUT	2	1
- 47	95-324018-35	TUBE ASSY,OIL PRESSURE LH	1	1
- 48	95-324018-107	TUBE ASSY,OIL PRESSURE RH	1	1
- 49	¤AN832-4D	UNION	4	1
	¤AN960-716	WASHER	4	1
	¤AN924-4D	NUT		1
- 50	95-324072-25	TUBE ASSY,OIL PRESSURE LH	1	2
	96-324038-85	TUBE ASSY,OIL PRESSURE LH	1	3
- 51	95-324072-19	TUBE ASSY,OIL PRESSURE RH	1	1
- 52	96-324038-27	TUBE ASSY,OIL PRESSURE LH	1	1
- 53	95-324072-21	TUBE ASSY,OIL PRESSURE RH	1	1
- 54	¤AN816-4D	NIPPLE	2	1
- 55	¤AN833-4	ELBOW,MANIFOLD PRESSURE FIREWALL	2	1
	¤AN960-716	WASHER	2	1
	¤AN924-4	NUT	2	1
- 56	¤95-324018-111	TUBE ASSY,MANIFOLD PRESSURE LH	1	1
- 57	95-324018-123	TUBE ASSY,MANIFOLD PRESSURE RH	1	1
- 58	¤AN837-4D	ELBOW	4	1
	¤AN960-716	WASHER	4	1
	¤AN924-4D	NUT	4	1
- 59	95-324018-115	TUBE ASSY,MANIFOLD PRESSURE LH	1	1
- 60	95-324018-119	TUBE ASSY,MANIFOLD PRESSURE RH	1	1
- 61	96-324038-13	TUBE ASSY,MANIFOLD PRESSURE LH	1	1
- 62	96-324038-7	TUBE ASSY,MANIFOLD PRESSURE RH	1	1
- 63	¤AN832-4D	UNION	2	1
	¤AN960-716	WASHER	2	1
	¤AN924-4D	NUT	2	1
- 64	95-324072-9	TUBE ASSY,MANIFOLD PRESSURE LH /USE WITH TWO TACHOMETERS/	1	1
	96-324038-11	TUBE ASSY,MANIFOLD PRESSURE LH /USE WITH DUAL TACHOMETER/	1	1
- 65	95-324072-7	TUBE ASSY,MANIFOLD PRESSURE RH /USE WITH TWO TACHOMETERS/	1	1
	96-324038-9	TUBE ASSY,MANIFOLD PRESSURE RH /USE WITH DUAL TACHOMETER/	1	1
- 66	¤AN816-4D	NIPPLE	2	1
- 67	¤95-324018-51	TUBE ASSY,VACUUM /LH ONLY WITH SINGLE PUMP/	2	1
- 68	¤AN822-10D	ELBOW /LH ONLY WITH SINGLE PUMP/	2	1
- 69	AN848-10D	ELBOW /LH ONLY WITH SINGLE PUMP/	2	1
	¤AN960-1416	WASHER /LH ONLY WITH SINGLE PUMP/	2	1
	¤AN924-10D	NUT /LH ONLY WITH SINGLE PUMP/	2	1

FIG. & INDEX NO.	PART NO.	DESCRIPTION 1 2 3 4 5 6 7	UNITS PER ASSY	USABLE ON CODE
62A- 70	106200H10-26	. HOSE /LH ONLY WITH SINGLE PUMP/ . . . . . /ORDER 5/8 ID MIL6000 X 6 1/2 IN./	2	1
- 71	¤AN737TW34	. CLAMP /LH ONLY WITH SINGLE PUMP/.	12	1
- 72	106200H10	. HOSE /LH ONLY WITH SINGLE PUMP/ . . . . . /ORDER 5/8 ID MIL6000,SPECIFY LENGTH/	2	1
- 73	¤133A3	. VALVE,REGULATOR /LH ONLY WITH SINGLE PUMP/. .	2	4
	¤133B3	. VALVE,REGULATOR /USED ON BASIC,-1,-3 AND. . . -5 INSTL/	2	5
	¤3005A1	. . FILTER,FOAM RUBBER. . . . . /LH ONLY WITH SINGLE PUMP/	2	1
- 74	106200H8	. HOSE /LH ONLY WITH SINGLE PUMP/ . . . . . /ORDER 1/2 ID MIL6000,SPECIFY LENGTH/	2	1
- 75	134A1	. FITTING /LH ONLY WITH SINGLE PUMP/.	2	1
- 76	95-324073	. MANIFOLD ASSY,VACUUM.	1	4
	95-324073-37	. MANIFOLD ASSY,VACUUM.	1	5
- 77	AN913-2D	. PLUG.	2	1
- 78	¤AN823-6D	. ELBOW	3	1
- 79	AN6270-6	. HOSE ASSY,VACUUM.	2	1
- 80	¤AN816-4D	. NIPPLE.	1	1
- 81	¤AN816-6D	. NIPPLE.	1	1
- 83	¤AN837-4D	. ELBOW	1	1
- 82	AN6270-4	. HOSE ASSY,VACUUM.	1	1
	¤AN960-716	. WASHER.	1	1
	¤AN924-4D	. NUT	1	1
- 84	96-324038-33	. TUBE ASSY,VACUUM.	1	1
- 85	¤AN832-4D	. UNION	1	1
	¤AN960-716	. WASHER.	1	1
	¤AN924-4D	. NUT	1	1
- 86	96-324038-31	. TUBE ASSY,VACUUM.	1	1
- 87	¤AN816-2D	. NIPPLE.	1	1
- 88	¤203886-2	. FITTING /LH ONLY WITH SINGLE PUMP/.	2	1
- 89	95-324018-137	. SPACER /LH ONLY WITH SINGLE PUMP/ . . . . . /ATTACHING PARTS/	2	1
	AN515-8	. SCREW	5	
	¤MS20365-832	. NUT /SUPERSEDES AN365-832/.	5	
		----*----		
	95-324018-217	. SPACER /RH ONLY WITH SINGLE PUMP/	1	1
	95-324028	CABLE INSTL,FLEXIBLE DRIVE SHAFT TACHOMETER . .	NP	1
- 90	¤1560615	. SHAFT,TACHOMETER FLEXIBLE DRIVE	2	1

CODE	EFFECTIVITY	CODE	EFFECTIVITY
1	TD-534 THRU TD-707	2	TD-534 THRU TD-637
3	TD-638 THRU TD-707	4	TD-534 THRU TD-622
5	TD-623 THRU TD-707		

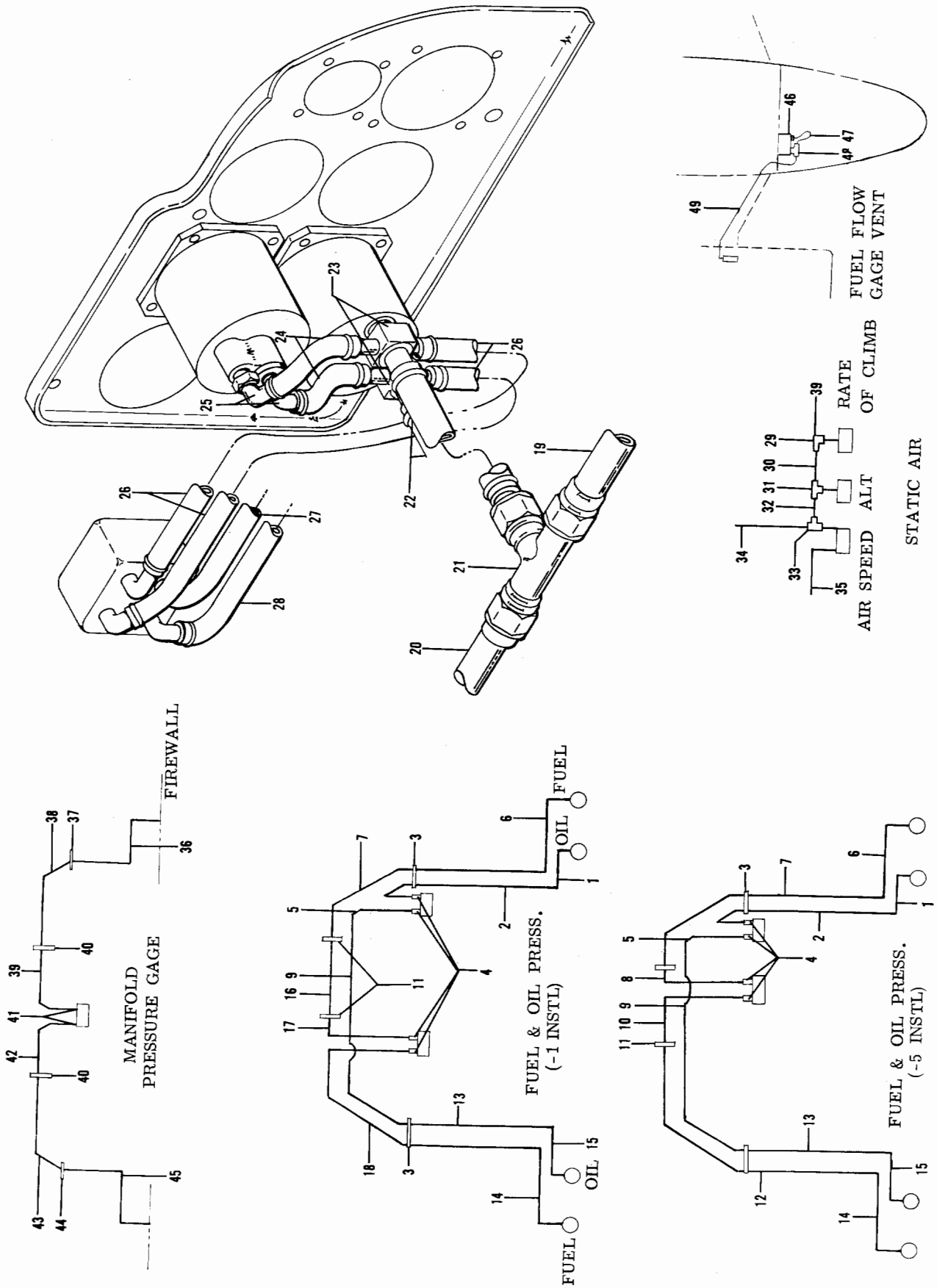

Figure 62B. Instrument, Pitot and Static Plumbing (TD-708 and After)

FIG. & INDEX NO.	PART NO.	DESCRIPTION 1 2 3 4 5 6 7	UNITS PER ASSY	USABLE ON CODE
62B	95-324078-1	PLUMBING INSTL,INSTRUMENT /STANDARD WITH TWO. . SINGLE TACHOMETERS/	NP	1
	95-324078-5	PLUMBING INSTL,INSTRUMENT /OPTIONAL WITH DUAL . TACHOMETER/	NP	1
- 1	95-324018-43	. TUBE ASSY,OIL PRESSURE.	1	1
- 2	95-324078-13	. TUBE ASSY,OIL PRESSURE.	1	1
- 3	96-324038-93	. BRACKET	2	1
- 4	¤AN816-2D	. NIPPLE.	2	1
	¤AN816-4D	. NIPPLE.	2	1
- 5	95-324078-15	. TUBE ASSY	1	1
- 6	95-324018-231	. TUBE ASSY,FUEL PRESSURE	1	1
- 7	95-324078-47	. TUBE ASSY,FUEL PRESSURE	1	1
- 8	95-324078-49	. TUBE ASSY	1	1
- 9	96-324128-29	. TUBE ASSY	1	1
- 10	95-324078-51	. TUBE ASSY	1	1
- 11	95-324018-141	. BRACKET	2	1
- 12	95-324078-53	. TUBE ASSY	1	1
- 13	95-324078-23	. TUBE ASSY	1	1
- 14	95-324018-229	. TUBE ASSY,FUEL PRESSURE	1	1
- 15	95-324018-31	. TUBE ASSY,OIL PRESSURE.	1	1
- 16	95-324078-17	. TUBE ASSY /USED ON -1 INSTL ONLY/	1	1
- 17	95-324078-19	. TUBE ASSY /USED ON -1 INSTL ONLY/	1	1
- 18	95-324078-21	. TUBE ASSY /USED ON -1 INSTL ONLY/	1	1
- 19	96-324012-23	. TUBE ASSY	1	1
- 20	96-324012-19	. TUBE ASSY	1	1
- 21	96-324128-9	. TUBE ASSY	1	1
- 22	114693-6-	. TUBE.	1	1
		/ATTACHING PARTS/		
- 23	1K17-1	. FITTING	2	
	¤A10	. CLAMP	3	
	¤A8	. CLAMP	2	
	¤A6	. CLAMP	2	
		----*----		
- 24	114693-4-	. TUBE.	2	1
- 25	¤1K9-4-6	. ELBOW	2	1
- 26	114693-2-	. TUBE.	2	1
- 27	96-324012-33	. TUBE.	1	1
- 28	96-324012-35	. TUBE.	1	1
- 29	¤AN816-4D	. ELBOW	1	1
- 30	96-324128-19	. TUBE.	1	1
- 31	¤AN825-4D	. TEE	1	1
- 32	96-324128-21	. TUBE.	1	1
- 33	¤AN826-4D	. TEE	1	1
- 34	96-324038-37	. TUBE.	1	
- 35	96-324038-61	. TUBE ASSY	1	1
- 36	96-324038-103	. TUBE.	1	1
- 37	96-324038-93	. BRACKET	1	1
- 38	96-324128-11	. TUBE ASSY	1	1
- 39	96-324128-13	. TUBE ASSY /USED ON -1 INSTL/.	1	1
	96-324078-9	. TUBE ASSY /USED ON -5 INSTL/.	1	1
- 40	96-324018-141	. BRACKET	2	1
- 41	¤AN816-4D	. ELBOW	2	1
- 42	96-324128-15	. TUBE ASSY /USED ON -1 INSTL/.	1	1
	96-324078-11	. TUBE ASSY /USED ON -5 INSTL/.	1	1
- 43	96-324128-17	. TUBE ASSY	1	1
- 44	96-324038-93	. BRACKET	1	1
- 45	96-324038-104	. TUBE.	1	1
- 46	¤268P1/4-1/8	. CONNECTOR,MALE.	1	1
- 47	96-324038-112	. TUBE.	1	1
- 48	¤271P1/4-1/8	. TEE	1	1
- 49	96-324038-110	. TUBE.	1	1

CODE EFFECTIVITY

1 TD-708 AND AFTER

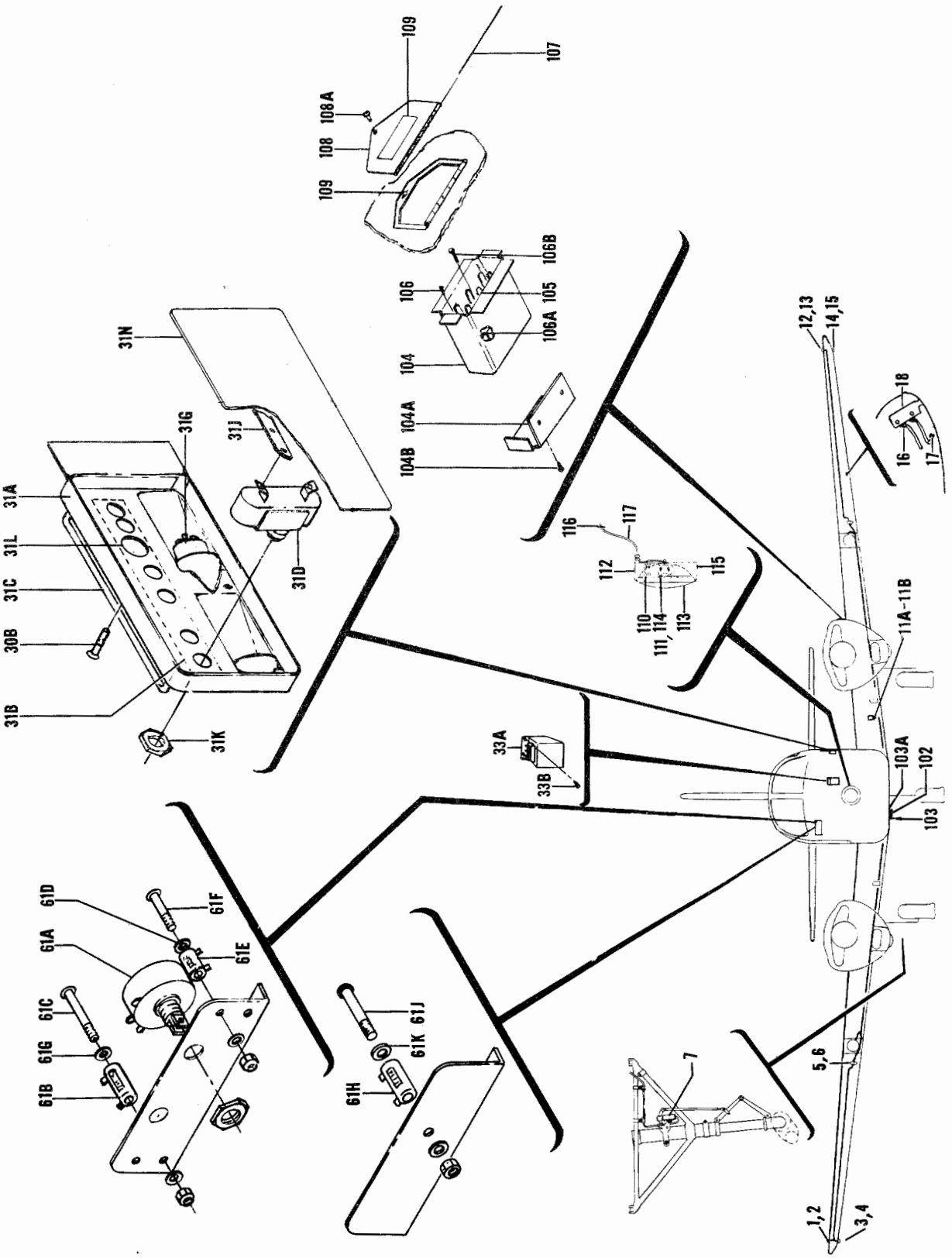

Figure 63. Electrical Equipment (Sht. 1 of 2 Shts.)

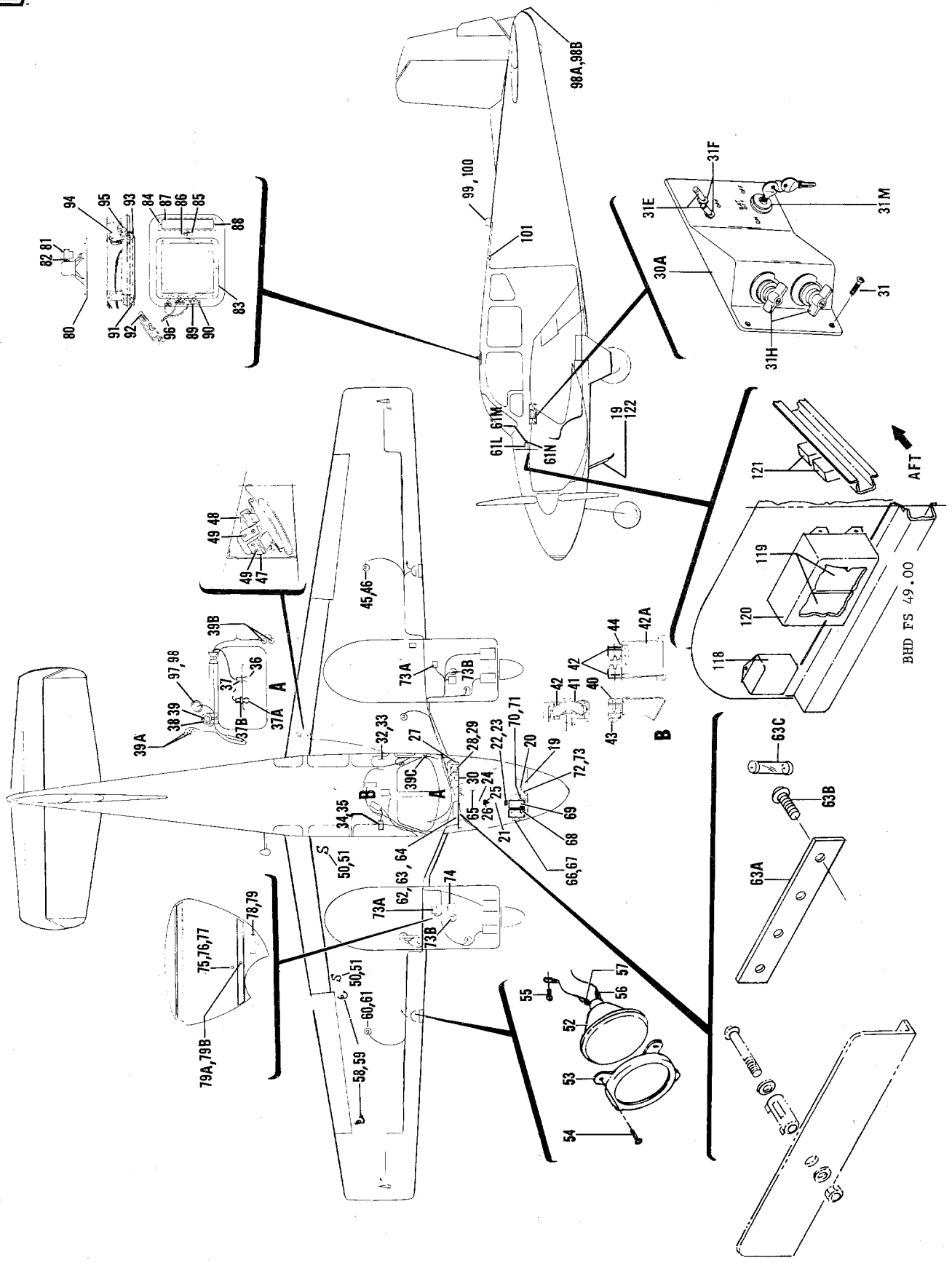

Figure 63. Electrical Equipment (Sht. 2 of 2 Shts.)

FIG. & INDEX NO.	PART NO.	DESCRIPTION 1 2 3 4 5 6 7	UNITS PER ASSY	USABLE ON CODE
63	95-360000	ELECTRICAL INSTL.	NP	
	95-360001	ELECTRICAL INSTL /USE WITH ALTERNATOR/.	NP	1
- 1	¤B3307-1	. LAMP ASSY,GREEN	1	
		/ATTACHING PARTS/		
- 2	AN526-632	. SCREW	3	
		----*----		
- 3	¤B3307-2	. LAMP ASSY,GREEN	1	
		/ATTACHING PARTS/		
- 4	AN526-632	. SCREW	3	
		----*----		
- 5	¤49245	. BAND.	10	
- 6	¤49196	. CLIP.	10	
	95-361014	. SWITCH INSTL,LANDING GEAR SAFETY.	NP	
- 7	95-361015	. . SWITCH ASSY,MAIN LANDING GEAR LH.	1	
- 8		. . DELETED		
- 9		. . DELETED		
- 10		. . DELETED		
- 11		. . DELETED		
- 11A	¤AN3106B10S2S	. PLUG,FUEL BOOST PUMP CONNECTOR.	1	2
- 11B	¤AN3057-3	. ADAPTER,FUEL BOOST PUMP CONNECTOR	1	2
- 12	¤B3307-3	. LAMP ASSY,WING LIGHT RED.	1	
		/ATTACHING PARTS/		
- 13	AN526-632	. SCREW	3	
		----*----		
- 14	¤B3307-4	. LAMP ASSY,WING LIGHT RED.	1	
		/ATTACHING PARTS/		
- 15	AN526-632	. SCREW	3	
		----*----		
	35-361025	. UNIT INSTL,STALL WARNING.	NP	
- 16	AN659-1	. . TERMINAL.	1	
- 17	AN659-2	. . TERMINAL.	1	
- 18	¤151	. . DETECTOR,WING UNIT.	1	
- 19	95-360000-1	. TUBE,BATTERY VENT	1	
- 20	¤AN931-8-13	. GROMMET	1	
- 21	95-360000-3	. TUBE,BATTERY DRAIN.	1	
- 22	¤AN737RM24	. CLAMP	1	
		/ATTACHING PARTS/		
- 23	AN515-8R	. SCREW	1	
	AN365D832	. NUT	1	
		----*----		
- 24	95-360000-5	. TUBE,BATTERY DRAIN COVER.	1	
- 25	¤AN742-10	. CLAMP	1	
		/ATTACHING PARTS/		
- 26	AN520-10R	. SCREW	1	
		----*----		
- 27	¤624	. FLASHER,LANDING GEAR WARNING HORN	1	25
	¤R102	. FLASHER,LANDING GEAR WARNING HORN	1	26
		/ATTACHING PARTS/		
	AN520-6R5	. SCREW	1	
	¤AN960-6L	. WASHER.	1	
	¤MS20365-632	. NUT	1	
		----*----		
	1-3/4D48F40	. RESISTOR.	1	26
		/ATTACHING PARTS/		
	2163	. WASHER,FIBER.	2	
	AN515-8R36	. SCREW	1	
	¤MS20365-832	. NUT	1	
		----*----		
	¤MS25253-2	. SWITCH,THROTTLE WARNING /SEE FIG. 58 FOR NHA/	1	
		/SUPERSEDES AN3234-2 & V3-23/		
- 28	¤169-380021-11	. HORN,STALL WARNING /SUPERSEDES 1-02-000/. . .	1	
		/ATTACHING PARTS/		
- 29	AN515-632	. SCREW	4	
	¤AN960-6	. WASHER.	4	
		----*----		
- 30	¤169-380021-9	. HORN,LANDING GEAR WARNING /SUPERSEDES 319/. .	1	

FIG. & INDEX NO.	PART NO.	DESCRIPTION 1 2 3 4 5 6 7	UNITS PER ASSY	USABLE ON CODE
63	95-364025-3	. ESCUTCHEON ASSY,IGNITION PANEL.	1	3
	¤95-364025-9	. ESCUTCHEON ASSY,IGNITION PANEL.	1	4
- 30A	95-364029-1	. ESCUTCHEON ASSY,IGNITION PANEL.	1	5
	96-364033	. ESCUTCHEON ASSY,IGNITION PANEL.	1	1
	96-364033-3	. ESCUTCHEON ASSY,IGNITION PANEL. . . . . /USE WITH ALTERNATORS/ /ATTACHING PARTS/	1	1
- 30B	NAS384-6	. SCREW	5	4
- 31	NAS384-6	. SCREW . . . . . ----*----	4	2
	¤95-364025-1	. . ESCUTCHEON,IGNITION PANEL	1	3
- 31A	95-364025-7	. . ESCUTCHEON,IGNITION PANEL	1	4
	96-364033-1	. . ESCUTCHEON,IGNITION PANEL	1	1
	96-364033-5	. . ESCUTCHEON,IGNITION PANEL . . . . . /USE WITH ALTERNATOR/	1	1
	96-364037	. . PLACARD,ALTERNATOR PARALLEL SWITCH.	1	1
- 31B	95-364026	. . PLACARD,IGNITION PANEL INSTRUCTION.	1	3
	¤95-364030	. . PLACARD,IGNITION SWITCH	1	1
	95-324062	. . PLACARD,IGNITION PANEL IDENTIFICATION . . .	1	4
	95-364035	. . PLACARD,IGNITION PANEL IDENTIFICATION . . .	1	1
	95-364035-1	. . PLACARD,IGNITION PANEL IDENTIFICATION . . . /USE WITH ALTERNATOR/	1	1
- 31C	95-324056	. GUARD ASSY,MAGNETO SWITCH PANEL	1	6
	¤8906K754	. SWITCH,SINGLE POLE SINGLE THROW TOGGLE. . . .	4	3
- 31D	¤8906K754	. SWITCH,SINGLE POLE SINGLE THROW TOGGLE. . . .	6	4
- 31E	¤AN3021-10	. SWITCH,GENERATOR.	2	5
	¤35-380053-7	. SWITCH,GENERATOR.	2	1
	¤35-380052	. KNOB.	3	1
	¤35-380053-9	. SWITCH,ALTERNATOR	1	1
- 31F	¤156-10	. SLEEVE,GENERATOR SWITCH	2	5
- 31G	¤9095	. SWITCH,HEAVY DUTY STARTER	2	6
- 31H	¤10-126630-1	. SWITCH,HEAVY DUTY STARTER	2	2
- 31J	MS25226-4-5	. BAR,BUS	1	3
	MS25226-4-4	. BAR,BUS	1	4
	¤6050CC	. NUT,RING.	4	3
- 31K	¤6050CC	. NUT,RING.	6	4
- 31L	¤COB71989-1	. SWITCH,BATTERY IGNITION	1	4
- 31M	¤COB71989-1	. SWITCH,BATTERY IGNITION	1	2
- 31N	95-360000-13	. PLATE,IGNITION PANEL ESCUTCHEON	1	4
- 32	¤90-28	. FLASHER UNIT,NAVIGATION LIGHT . . . . . /USED WITHOUT ROTATING BEACON/ /ATTACHING PARTS/	1	
- 33	AN520-10	. SCREW	3	
	¤AN960-10L	. WASHER. . . . . ----*----	3	
- 33A	¤AN960-106	. VIBRATOR,STARTER /SUPERSEDES 10-87996-1/. . . /ATTACHING PARTS/	1	2
- 33B	¤AN520-10R5	. SCREW . . . . . ----*----	2	
- 34	¤6046H39A	. RELAY,DYNAMIC BREAKING. . . . . /ATTACHING PARTS/	1	
- 35	AN520-10	. SCREW	2	
	¤AN960-10L	. WASHER. . . . . ----*----	2	
- 36	¤1819R	. LAMP,TAB INDICATOR.	1	
- 37	¤2505	. SOCKET,TAB LIGHT.	1	
- 37A	¤1819	. LAMP,CONSOLE.	1	7
- 37B	¤2505	. SOCKET,CONSOLE LIGHT.	1	7
- 38	¤1819R	. LAMP,TAB INDICATOR.	1	
- 39	¤2505	. SOCKET,TAB LIGHT.	1	
	¤AN960-1016L	. WASHER.	1	
- 39A	¤327	. LAMP,LANDING GEAR INDICATOR . . . . . /SUPERSEDES AN3140-327/	2	
- 39B	¤327	. LAMP,FLAP POSITION INDICATOR. . . . . /SUPERSEDES AN3140-327/	2	
- 39C	¤313	. LAMP,STALL WARNING INDICATOR. . . . . /SUPERSEDES AN3121-313/	1	

FIG. & INDEX NO.	PART NO.	DESCRIPTION 1 2 3 4 5 6 7	UNITS PER ASSY	USABLE ON CODE
63 -	¤95-364011-601	. SWITCH ASSY,LANDING GEAR LIMIT.	1	
		/SPARE ASSY,SEE SECTION 4 FOR COMPONENTS/		
	95-364011	. SWITCH ASSY,LANDING GEAR LIMIT.	NP	
- 40	¤MS25026-1	. . SWITCH,/SUPERSEDES AN3210-1/.	4	8
	¤MS25026-1	. . SWITCH,/SUPERSEDES AN3210-1/.	3	9
	¤BZ-3YT	. . SWITCH,HEATER BLOWER /SUPERSEDES BZ-3AT/. .	1	9
- 41	¤35-364247	. . ACTUATOR,LANDING GEAR LIMIT SWITCH.	4	
		/ATTACHING PARTS/		
- 42	AN515-632	. . SCREW	1	
		----*----		
- 42A	¤35-364126	. . BRACKET,LANDING GEAR LIMIT SWITCH	1	
- 43	35-364137	. . PLATE	1	
- 44	35-364238	. . INSULATOR	4	
- 45	¤MS25083-1BA6	. JUMPER.	1	
		/ATTACHING PARTS/		
- 46	AN507-632R	. SCREW	1	
	¤AN960-6	. WASHER.	1	
	¤MS20365-632	. NUT /SUPERSEDES AN365-632/.	1	
		----*----		
	95-361016	. SWITCH INSTL,FLAP LIMIT	NP	10
	45-361115	. SWITCH INSTL,FLAP LIMIT	NP	4
- 47	¤45-361116	. . SWITCH ASSY,FLAP LIMIT UP	1	11
- 48	95-361017	. . SWITCH ASSY,FLAP LIMIT DOWN	1	10
	¤45-361117	. . SWITCH ASSY,FLAP LIMIT DOWN	1	4
		/ATTACHING PARTS/		
- 49	¤AN515-8R7	. . SCREW	2	
	¤AN960D8	. . WASHER.	2	
		----*----		
- 50	CP6P	. JUMPER,BOND	2	
		/ATTACHING PARTS/		
- 51	AN515-632	. SCREW	2	
	¤AN960-6	. WASHER.	2	
	¤MS20365-632	. NUT /SUPERSEDES AN365-632/.	1	
		----*----		
- 52	¤4553	. LAMP,LANDING LIGHT /SUPERSEDES 4523/.	1	11
- 53	¤45-115018	. CLAMP	1	11
		/ATTACHING PARTS/		
- 54	AN515-8R	. SCREW	4	
- 55	AN520-10R	. SCREW	1	
	¤AN960-6	. WASHER.	4	
	¤AN960D10	. WASHER.	1	
	¤MS20365-1032	. NUT /SUPERSEDES AN365-1032/	1	
		----*----		
- 56	31902	. TERMINAL.	1	11
- 57	¤31903	. TERMINAL.	1	11
- 58	¤AQ6Q	. WIRE,BOND	2	
		/ATTACHING PARTS/		
- 59	AN515-632	. SCREW	2	
	¤AN960-6	. WASHER.	2	
	¤MS20365-632	. NUT /SUPERSEDES AN365-632/.	2	
		----*----		
- 60	MS25083-1BA6	. JUMPER.	1	
		/ATTACHING PARTS/		
- 61	AN507-632R	. SCREW	1	
	¤AN960-6	. WASHER.	1	
	¤MS20365-632	. NUT /SUPERSEDES AN365-632/.	1	
		----*----		
- 61A	CLU1021	. POTENTIOMETER,LINEAR LOCKING /TYPE AB/. . . .	2	12
- 61B	NO NUMBER	. RESISTOR /TYPE 10 F 800 OHM 10 WATT/.	2	12
		/ATTACHING PARTS/		
- 61C	AN515-832	. SCREW	1	
- 61D	¤3052	. WASHER,FIBRE.	2	
	¤MS20365-832	. NUT /SUPERSEDES AN365-832/.	1	
		----*----		

FIG. & INDEX NO.	PART NO.	DESCRIPTION 1 2 3 4 5 6 7	UNITS PER ASSY	USABLE ON CODE
63 - 61E	NO NUMBER	. RESISTOR /TYPE 5F 800 OHM 5 WATT.	2	12
		/ATTACHING PARTS/		
- 61F	AN515-832	. SCREW	1	
- 61G	¤3052	. WASHER,FIBRE.	2	
	¤MS20365-832	. NUT /SUPERSEDES AN365-832/.	1	
		----*----		
- 61H	¤50 OHM 25 WATT	. RESISTOR.	1	13
		/ATTACHING PARTS/		
- 61J	AN515-832	. SCREW	1	
- 61K	¤3052	. WASHER,FIBRE.	1	
	¤MS20365-832	. NUT /SUPERSEDES AN365-832/.	1	
		----*----		
- 61L	¤3 OHM 10 WATT	. RESISTOR.	1	
		/ATTACHING PARTS/		
- 61M	AN515-8-36	. SCREW	1	
- 61N	¤3052	. WASHER,FIBRE.	2	
		----*----		
- 62	4524	. BLOCK,FUSE.	1	
		/ATTACHING PARTS/		
- 63	¤AN507-632R7	. SCREW	2	
		----*----		
- 63A	357004	. BLOCK,FUSE.	1	2
		/ATTACHING PARTS/		
- 63B	AN507-632	. SCREW	2	
	¤AN960-6	. WASHER.	2	
	¤MS20365-632	. NUT /SUPERSEDES AN365-632/.	2	
		----*----		
- 63C	¤3AG312500	. FUSE.	4	2
- 64	¤AGX3	. FUSE,HEATER	2	8
	313005	. FUSE,HEATER /SUPERSEDES AGX5/	2	9
- 65	¤MS35489-17	. GROMMET /SUPERSEDES AN931-10-14/.	1	
- 66	¤6041H189	. RELAY,BATTERY MASTER.	1	
		/ATTACHING PARTS/		
- 67	¤AN4-4A/M/	. BOLT.	2	
		----*----		
- 68	¤414-189412	. BAR,BUS /OPTIONAL/.	2	
- 69	118658	. BATTERY /OPTIONAL/ /SUPERSEDES S24 & S25/ . .	2	
	¤118654	. BATTERY,AIRCRAFT.	1	
	95-361018	. SPACER,BATTERY SUPPORT /STANDARD/	1	
- 70	¤AN737RM24	. CLAMP	1	
		/ATTACHING PARTS/		
- 71	AN515-8R	. SCREW	1	
	AN365D832	. NUT	1	
		----*----		
- 72	NO NUMBER	. JUMPER,BONDING.	1	
		/ATTACHING PARTS/		
- 73	105982-5A11-010	. BOLT.	1	
	¤AN960-516	. WASHER.	5	
	¤AN935-516	. WASHER.	1	
	¤AN316-5R	. NUT	1	
	¤AN315-5R	. NUT	1	
		----*----		
	¤AN3106B14S7S	. PLUG,COWL FLAP MOTOR CONNECTOR.	2	14
- 73A	MS3108-14S7S	. PLUG,COWL FLAP MOTOR CONNECTOR.	2	16
	¤MS3106B14S2S	. PLUG,OIL TEMPERATURE UNIT CONNECTOR	2	14
- 73B	MS3106-14S5S	. PLUG,OIL TEMPERATURE UNIT CONNECTOR	2	15
- 74	948016-01	. FILTER,UNIT /SUPERSEDES 705535/	1	
- 75	¤112436-6	. RETAINER.	1	
		/ATTACHING PARTS/		
- 76	AN515R6	. SCREW	2	
		----*----		
	¤95-360000-7	. GASKET,RETAINER	1	
- 77	¤S104-12	. GROMMET	1	

FIG. & INDEX NO.	PART NO.	DESCRIPTION 1 2 3 4 5 6 7	UNITS PER ASSY	USABLE ON CODE
63 - 78	AN3435-2-10	. BLOCK,TERMINAL.	1	
		/ATTACHING PARTS/		
- 79	AN514-4	. SCREW	2	
	AN935-4L	. WASHER.	2	
	¤AN960-4L	. WASHER.	2	
	¤AN340-4	. NUT	2	
		----*----		
	AN3437-1-11	. STRIP,TERMINAL BLOCK BASE INSULATING.	1	
	AN3432-6-12	. STUD,TERMINAL BLOCK	10	
	¤AN341-6	. NUT	10	
	¤AN960-6	. WASHER.	10	
	¤MS20365-632	. NUT /SUPERSEDES AN365-632/.	10	
- 79A	NO NUMBER	. WIRE,2 GAGE STARTER GROUND.	1	
		/ATTACHING PARTS/		
- 79B	AN520R416	. SCREW	1	
	¤AN960-416	. WASHER.	3	
	¤AN936A416	. WASHER.	1	
	¤AN935-416	. WASHER.	1	
	¤AN315-4R	. NUT	1	
	AN316-416	. NUT	1	
		----*----		
	95-344010	. UNIT INSTL,SPEAKER & LIGHT.	NP	
	¤35-344158	. . SPEAKER ASSY,LEAR RADIO	1	
- 80	¤S10340	. . . SPEAKER	1	
- 81	A3005	. . . TRANSFORMER	1	
		/ATTACHING PARTS/		
- 82	AN515-6-4	. . . SCREW	2	
	¤AN935-6	. . . WASHER.	2	
		----*----		
- 83	¤35-344152	. . FRAME,SPEAKER GRILL	1	
		/ATTACHING PARTS/		
- 84	NAS387-632R10P	. . SCREW	8	
	¤AN960-6	. . WASHER.	4	
	¤MS20365-632	. . NUT /SUPERSEDES AN365-632/.	4	
		----*----		
- 85	¤SS32-1	. . SWITCH,SLIDE /SUPERSEDES SS1/	2	17
		/ATTACHING PARTS/		
- 86	AN530-4R	. . SCREW	2	
	A1597-017-1	. . NUT	2	
		----*----		
	¤95-364022	. . PLACARD,MAP LIGHT	1	17
	¤95-364023	. . PLACARD,DOME LIGHT.	1	17
- 87	¤35-344146	. . LENS,OVERHEAD LIGHT	1	
		/ATTACHING PARTS/		
- 88	¤AN530-4R6	. . SCREW	2	
	NAS446-1	. . NUT	2	
		----*----		
- 89	¤35-344147	. . LENS,OVERHEAD LIGHT	1	
		/ATTACHING PARTS/		
- 90	¤AN530-4R6	. . SCREW	2	
	NAS446-1	. . NUT	2	
		----*----		
- 91	¤35-364022	. . SHUTTER,OVERHEAD LIGHT.	1	
		/ATTACHING PARTS/		
- 92	¤AN515-6R10	. . SCREW	1	
	¤MS20365-632	. . NUT /SUPERSEDES AN365-632/.	1	
	¤100943YN012R	. . SPRING.	1	
		----*----		
- 93	95-344010-1	. . ESCUTCHEON,LIGHT & SPEAKER UNIT	1	
- 94	¤SC2611	. . SOCKET.	6	
- 95	¤303 BULB	. . BULB.	6	
- 96	¤YZ14H1	. . CONNECTOR	1	
- 97	¤LPA27630	. ELEMENT,LIGHTER & KNOB.	1	
	¤LU27054	. SHELL,CLAMPING.	1	
- 98	¤LBA27492	. BASE,SWITCH	1	
	¤LWA29455	. CORD ASSY,ELEMENT /SUPERSEDES LWA2919/. . . .	1	

FIG. & INDEX NO.	PART NO.	DESCRIPTION 1 2 3 4 5 6 7	UNITS PER ASSY	USABLE ON CODE
63	¤LFA2850	. FUSE,ELEMENT.	1	
- 98A	¤A2064-1683	. LAMP ASSY,TAIL.	1	
		/ATTACHING PARTS/		
- 98B	AN520-4R	. SCREW	2	
		----*----		
	¤1203	. LAMP,TAIL	1	
	AN3111-2	. RING,CONNECTOR BONDING.	1	
	95-364013	LIGHT INSTL,UPPER ROTATING BEACON /OPTIONAL/. .	NP	
		/SEE FIG. 1 FOR NHA/		
- 99	¤G7740A9-24	. LIGHT,UPPER ROTATING BEACON	1	
		/ATTACHING PARTS/		
-100	¤AN515-6R7	. SCREW	5	
		----*----		
	¤35-364123-1	. DOUBLER,UPPER ROTATING BEACON LIGHT	1	18
	¤95-364013-1	. DOUBLER,UPPER ROTATING BEACON LIGHT	1	19
	¤95-364013-3	. SHIM,UPPER ROTATING BEACON LIGHT.	1	19
-101	¤111505	. CLIP ASSY,WIRE.	2	
	95-364024	LAMP INSTL,LOWER ROTATING BEACON /OPTIONAL/ . .	NP	20
		/SEE FIG. 1 FOR NHA/ /USED WITH 95-364013		
		BEACON LIGHT INSTL/		
	95-364024-7	. LAMP ASSY,LOWER ROTATING BEACON	1	20
		/ATTACHING PARTS/		
	¤AN515-6R8	. SCREW	5	
		----*----		
	¤PSM10N	. BREAKER,CIRCUIT	1	20
	95-364024-3	. . DOUBLER ASSY,LOWER ROTATING BEACON.	1	20
	¤95-364024-5	. . . DOUBLER,LOWER ROTATING BEACON	1	20
	95-364027	LIGHT INSTL,LOWER ROTATING BEACON /OPTIONAL/. .	1	21
		/SEE FIG. 1 FOR NHA/		
-102	95-364027-7	. BEACON ASSY,LOWER ROTATING.	1	21
		/ATTACHING PARTS/		
-103	¤AN515-6R8	. SCREW	5	
		----*----		
-103A	¤95-364027-5	. RING,LOWER ROTATING BEACON LIGHT.	1	21
	¤95-364027-3	. DOUBLER ASSY,LOWER ROTATING BEACON LIGHT. . .	1	22
	95-364027-1	. . DOUBLER,LOWER ROTATING BEACON LIGHT	1	22
	¤95-364027-15	. DOUBLER ASSY,LOWER ROTATING BEACON LIGHT. . .	1	23
	95-364027-13	. . DOUBLER,LOWER ROTATING BEACON LIGHT	1	23
	¤D7270-6-10	. BREAKER,CIRCUIT	1	21
	95-360012	RECEPTACLE INSTL,EXTERNAL POWER	NP	
	95-360012-27	. BOX ASSY,EXTERNAL POWER	1	
-104	95-360012-25	. . BOX,EXTERNAL POWER.	1	
-104A	¤180968	. . LID,EXTERNAL POWER RECEPTACLE	1	
		/ATTACHING PARTS/		
-104B	AN515-8-6	. . SCREW	3	
		----*----		
-105	¤AN2552A3A	. . RECEPTACLE.	1	
		/ATTACHING PARTS/		
-106	¤AN3-7A/M/	. . BOLT.	2	
	¤AN960-10	. . WASHER.	2	
	¤MS20365-1032	. . NUT /SUPERSEDES AN365-1032/	2	
		----*----		
-106A	95-360012-15	. . ANGLE,GROUNDING	1	
		/ATTACHING PARTS/		
-106B	AN4	. . BOLT.	1	
	¤AN960-416	. . WASHER.	1	
	¤AN316-4R	. . NUT	1	
		----*----		
	¤95-360012-23	. DOOR ASSY,EXTERNAL POWER.	1	
		/ATTACHING PARTS/		
-107	¤105774C-ZA00400	. PIN,HINGE	1	
		----*----		
-108	95-360012-17	. . DOOR,EXTERNAL POWER	1	
-108A	¤A4-30	. . FASTENER,DZUS	1	
-109	¤S4-225	. . SPRING,FASTENING.	1	
-109A	¤112700	. . PLACARD,EXTERNAL POWER 24 VOLT.	1	

FIG. & INDEX NO.	PART NO.	DESCRIPTION 1 2 3 4 5 6 7	UNITS PER ASSY	USABLE ON CODE
63 -	95-364012	LIGHT INSTL,NOSE TAXI /SEE FIG. 1 FOR NHA/. . .	NP	24
-110	¤50-364172-5	. CLIP ASSY,NOSE TAXI LIGHT	2	24
-111	¤50-364172-9	. CLIP ASSY,NOSE TAXI LIGHT	1	24
-112	¤50-364212-2	. RETAINER ASSY,NOSE TAXI LIGHT	1	24
		/SUPERSEDES 50-364212/		
-113	¤4570	. LAMP.	1	24
-114	¤AN515-8R5	. SCREW	4	24
	¤MS20365-832	. NUT /SUPERSEDES AN365-832/.	5	24
-115	¤AN515-8R9	. SCREW	3	24
-116	¤MS35489-6	. GROMMET,/SUPERSEDES AN931-4-7/.	1	24
	¤AN960-8L	. WASHER.	8	24
-117	¤49158	. CLIP.	2	24
	¤AN515-6R10	. SCREW	2	24
	¤AN960PD6L	. WASHER.	AR	24
-118	¤138-2	RELAY,VOLTAGE /SUPERSEDES X41530,1115832, . . .	1	
		& 50-380058-1/		
		/ATTACHING PARTS/		
	AN515-8R	SCREW	2	
	¤AN960-8	WASHER.	2	
	¤AN366F832	NUTPLATE /SUPERSEDES 130006A832/.	2	
		----*----		
-119	¤9000591	REGULATOR,VOLTAGE	2	
		/ATTACHING PARTS/		
	AN520-416R	SCREW	3	
	¤AN960-416	WASHER.	3	
	130006A428	NUTPLATE.	3	
		----*----		
-120	96-360002-5	COVER ASSY.	1	
		/ATTACHING PARTS/		
	AN515-8R	SCREW	4	
	¤AN960-8	WASHER.	4	
	¤AN366F832	NUTPLATE /SUPERSEDES 130006A832/.	4	
		----*----		
-121	4142341G49	SHUNT	2	
		/ATTACHING PARTS/		
	AN520-10R	SCREW	2	
	¤AN960-10	WASHER.	2	
	¤MS20365-1032	NUT	2	
		----*----		
-122	¤95-410005-177	MAST ASSY,BATTERY DRAIN TUBE.	1	11

CODE	EFFECTIVITY	CODE	EFFECTIVITY
1	TD-534 AND AFTER	2	TD-453 AND AFTER
3	TD-174 THRU TD-302	4	TD-303 THRU TD-452
5	TD-453 THRU TD-533	6	TD-174 THRU TD-452
7	TD-186 THRU TD-452	8	TD-1 THRU TD-202
9	TD-203 THRU TD-452	10	TD-1 THRU TD-302
11	TD-1 THRU TD-452	12	TD-143 THRU TD-402
13	TD-403 THRU TD-452	14	TD-1 THRU TD-119
15	TD-120 THRU TD-452	16	TD-120 THRU TD-222
17	TD-40 THRU TD-452	18	TD-1 THRU TD-21
19	TD-22 THRU TD-452	20	TD-1 THRU TD-199
21	TD-200 AND AFTER	22	TD-200 THRU TD-226
23	TD-227 AND AFTER	24	TD-1 THRU TD-533
25	TD-1 THRU TD-658	26	TD-659 AND AFTER

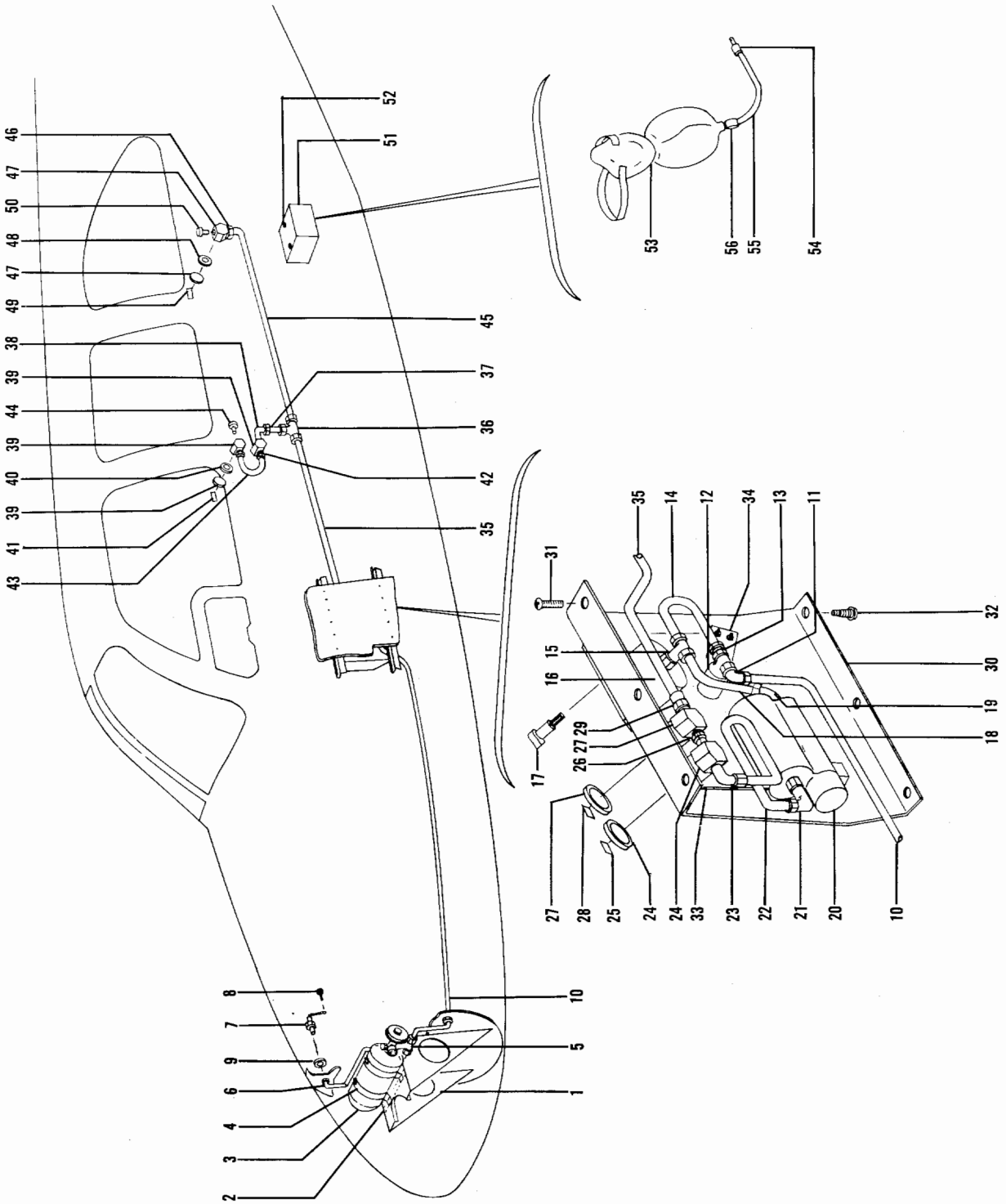

Figure 64. Oxygen System (TD-453 thru TD-707)

FIG. & INDEX NO.	PART NO.	DESCRIPTION 1 2 3 4 5 6 7	UNITS PER ASSY	USABLE ON CODE
64 -	95-560000-57	OXYGEN SYSTEM INSTL,4 OUTLET.	NP	1
	95-560000-59	OXYGEN SYSTEM INSTL,5 OUTLET.	NP	1
- 1	95-560000-3	. BRACKET,BOTTLE MOUNTING	1	1
- 2	95-560000-5	. CHANNEL	1	1
- 3	¤ZC268-38-7	. BOTTLE,OXYGEN /SUPERSEDES 18-300004-3/. . . .	1	1
- 4	¤18-300002	. BRACKET,BOTTLE CLAMP.	2	1
		/ATTACHING PARTS/		
	AN3A	. BOLT.	2	
	¤AN960-10	. WASHER.	2	
	¤NAS680A3	. NUTPLATE /SUPERSEDES AN366F1032/.	2	
		----*----		
- 5	¤18-300009-21	. TEE	1	1
- 6	95-560000-65	. TUBE ASSY	1	1
- 7	¤18-300009-11	. VALVE & CAP ASSY,FILLER	1	1
		/SUPERSEDES 18-300003/		
		/ATTACHING PARTS/		
	AN520-10R	. SCREW	3	
	¤AN960-10L	. WASHER.	3	
	¤MS20365-1032	. NUT /SUPERSEDES AN365-1032/	3	
		----*----		
- 8	AN515-440R	. SCREW	3	1
	¤AN960-4	. WASHER.	3	1
	¤MS20365-1032	. NUT /SUPERSEDES AN365-1032/	3	1
- 9	¤50-560015	. PLACARD,FILLER VALVE.	1	1
- 10	95-560000-61	. TUBE ASSY	1	1
- 11	¤AN791-3	. ELBOW	1	1
- 12	¤AN6012-1A	. VALVE	1	1
		/ATTACHING PARTS/		
	¤AN515-6R6	. SCREW	2	
	¤AN960-6L	. WASHER.	2	
		----*----		
- 13	¤AN780-3	. NIPPLE.	1	1
- 14	¤96-560001-41	. TUBE ASSY	1	1
- 15	92LB	. TEE /3/16 OD TUBING/.	1	1
- 16	¤50-384046	. INDICATOR,OXYGEN CYLINDER PRESSURE.	1	1
		/ATTACHING PARTS/		
	¤AN507-632R10	. SCREW	3	
	¤NAS487-20	. NUT	3	
		----*----		
- 17	¤A8970-1-327	. BOLT-LITE	1	1
- 18	96-560001-77	. TUBE ASSY	1	1
- 19	¤AN780-3	. NIPPLE.	1	1
- 20	¤18-300009-23	. REGULATOR	1	1
		/ATTACHING PARTS/		
	AN509-416R6	. SCREW	3	
	¤AN960-416	. WASHER.	3	
		----*----		
- 21	MS20822-5D	. ELBOW	1	1
- 22	¤96-560001-45	. TUBE ASSY	1	1
- 23	MS20822-5D	. ELBOW	1	1
- 24	¤18-300009-29	. OUTLET,PILOT OXYGEN	1	1
- 25	¤96-560011-1	. PLACARD,PILOT OUTLET.	1	1
- 26	¤AN911-1D	. NIPPLE.	1	1
- 27	¤18-300009-31	. OUTLET,COPILOT OXYGEN	1	1
- 28	¤96-560011-3	. PLACARD,COPILOT OUTLET.	1	1
- 29	¤AN816-5D	. NIPPLE.	1	1
- 30	¤96-560001-35	. ESCUTCHEON,OXYGEN PANEL	1	1
		/ATTACHING PARTS/		
- 31	¤AN530-6R8	. SCREW	3	
	¤AN1793-6Z3	. NUT	3	
- 32	6 TYPE A	. SCREW	3	
		----*----		
- 33	¤96-560001-37	. SUPPORT,REGULATOR & OUTLET.	1	1
		/ATTACHING PARTS/		
	¤AN507-632R5	. SCREW	4	
	¤AN960-6L	. WASHER.	4	
	¤H10-06	. NUT	4	
		----*----		

FIG. & INDEX NO.	PART NO.	DESCRIPTION 1 2 3 4 5 6 7	UNITS PER ASSY	USABLE ON CODE
64 - 34	¤96-560001-39	BRACKET,VALVE SUPPORT /ATTACHING PARTS/	1	1
	¤AN507-632R5	SCREW	4	
	¤AN960-6L	WASHER	4	
	¤H10-06	NUT	4	
- 35	95-560000-63	TUBE ASSY	1	1
	AN821-5D	ELBOW /4 OUTLET SYSTEM/	1	1
- 36	¤AN824-5D	TEE /5 OUTLET SYSTEM/	1	1
- 37	95-560000-19	TUBE ASSY	1	1
- 38	¤AN822-5D	ELBOW	1	1
- 39	¤18-300009-31	OUTLET,CABIN OXYGEN	2	1
- 40	¤50-534363 GOLD	ESCUTCHEON,CABIN OUTLET	2	1
	¤50-534363SILVER	ESCUTCHEON,CABIN OUTLET	2	1
- 41	¤50-560012	PLACARD,CABIN OUTLET	2	1
- 42	¤AN816-5D	NIPPLE	2	1
- 43	95-560000-21	TUBE ASSY	1	1
- 44	¤AN913-1D	PLUG	1	1
- 45	95-560000-23	TUBE ASSY	1	1
- 46	¤AN816-5D	NIPPLE	1	1
- 47	¤18-300009-31	OUTLET,CABIN OXYGEN	1	1
- 48	¤50-534363 GOLD	ESCUTCHEON,CABIN OUTLET	1	1
	¤50-534363SILVER	ESCUTCHEON,CABIN OUTLET	1	1
- 49	¤50-560012	PLACARD,CABIN OUTLET	1	1
- 50	¤AN913-1D	PLUG	1	1
- 51	¤96-560001-59	BOX ASSY,OXYGEN MASK STORAGE	1	1
- 52	¤AN227-7B	SOCKET	2	1
	¤AN227-6B	BUTTON	2	1
	¤18-300009-27	MASK ASSY,OXYGEN	5	1
- 53	¤18-300001	MASK	1	1
- 54	¤ZF454	CONNECTOR,PLUG-IN	1	1
- 55	¤18-300001-1	HOSE /SUPERSEDES OT536/	1	1
- 56	¤8540	FLOWMETER /SUPERSEDES ZV852/	1	1

CODE EFFECTIVITY

1 TD-453 THRU TD-707

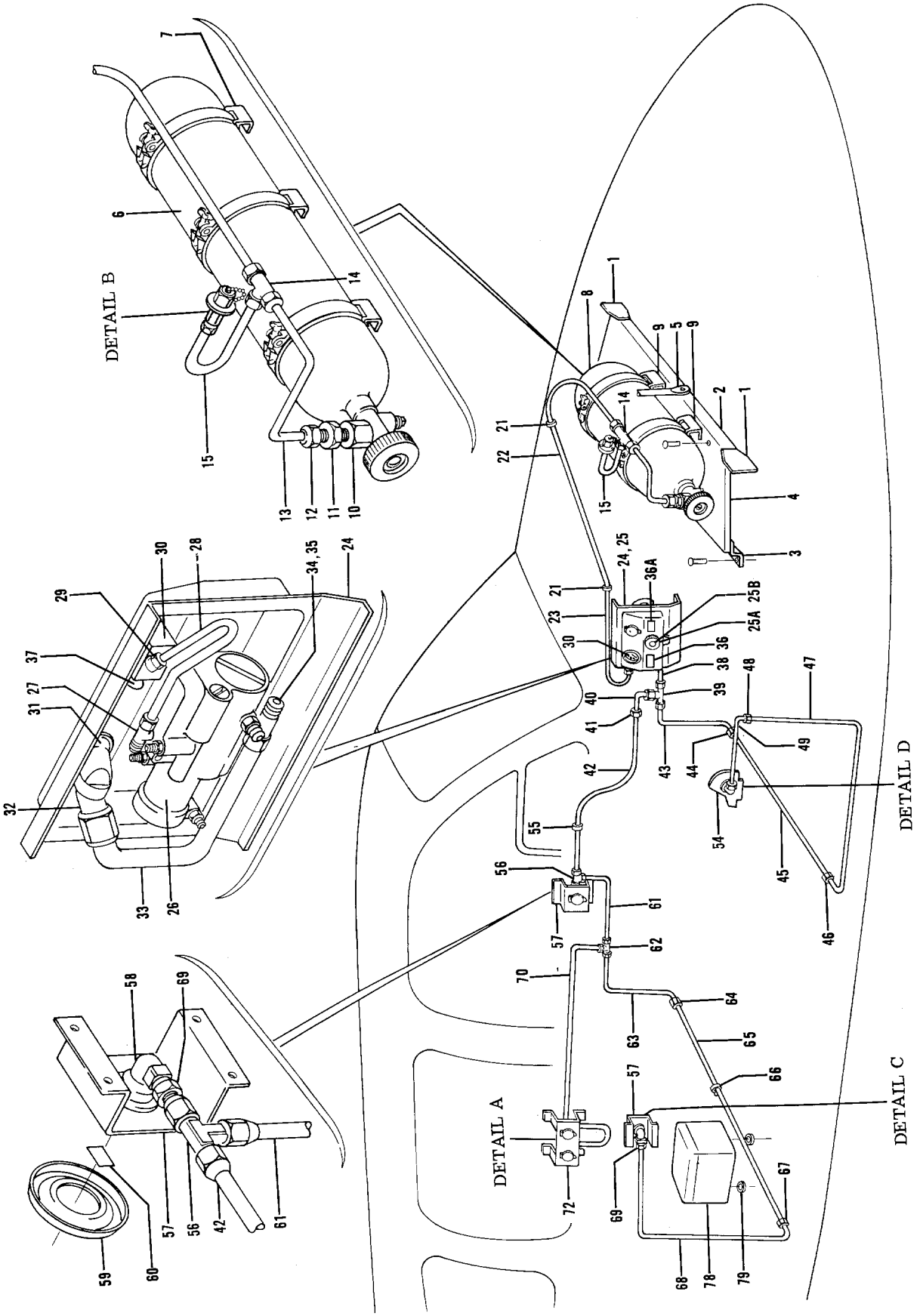

Figure 64A. Oxygen System (TD-708 and After) (Sheet 1 of 2 Sheets)

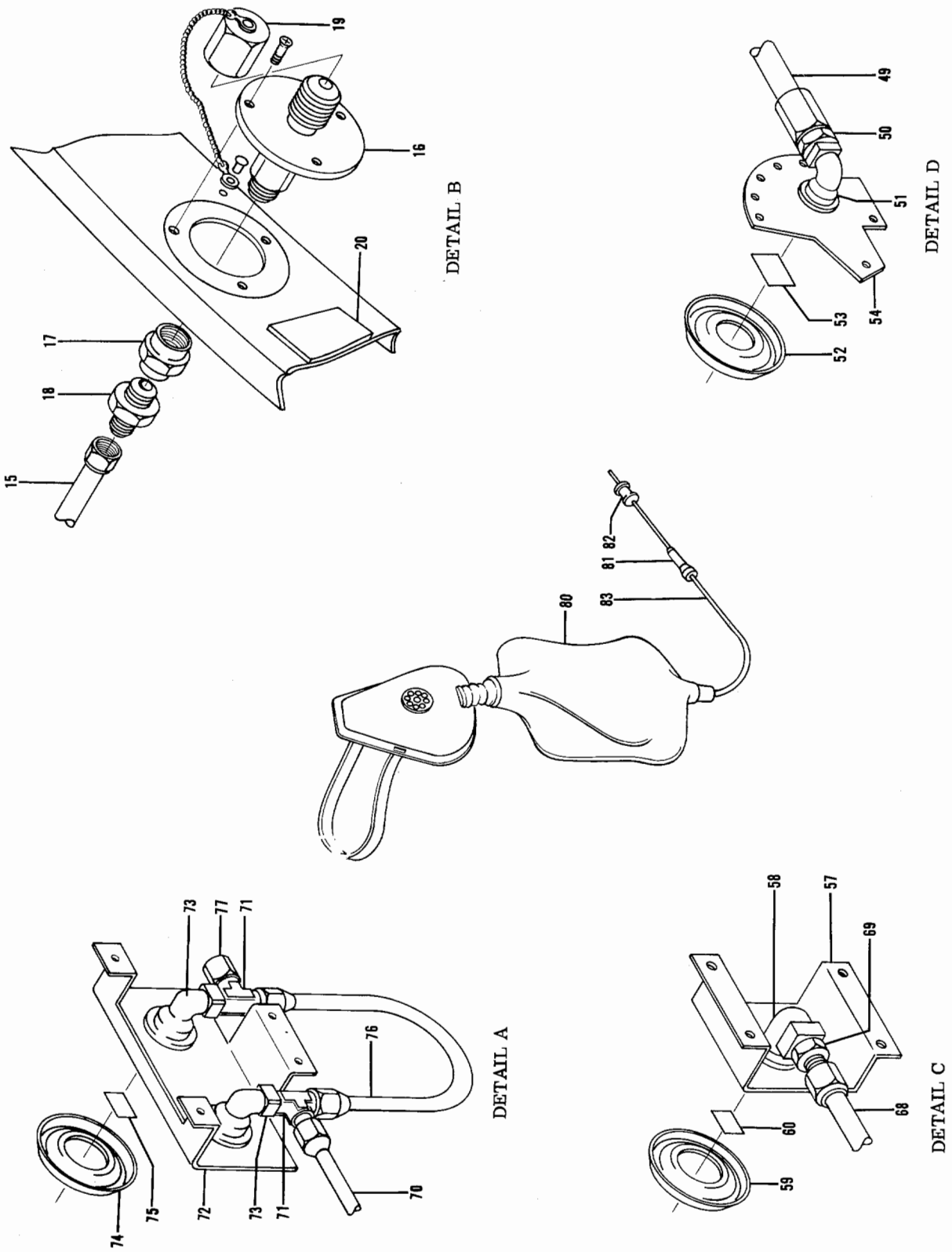

Figure 64A. Oxygen System (TD-708 and After) (Sheet 2 of 2 Sheets)

FIG. & INDEX NO.	PART NO.	DESCRIPTION 1 2 3 4 5 6 7	UNITS PER ASSY	USABLE ON CODE
64A	95-344056-41	SHELF INSTL,NOSE BAGGAGE COMPARTMENT.	NP	1
- 1	¤95-344056-11	. GUSSET.	2	1
- 2	95-344056-43	. CHANNEL	1	1
- 3	95-344056-39	. ZEE	2	1
		/ATTACHING PARTS/		
	¤AN520-10R10	. SCREW	4	
	¤AN960-10	. WASHER.	4	
	NAS1329A3K80	. RIVNUT.	4	
		----*----		
- 4	95-344056-47	. SHELF,NOSE BAGGAGE COMPARTMENT.	1	1
		/ATTACHING PARTS/		
	¤AN525-10R12	. SCREW	17	
	¤MS20365-1032	. NUT /SUPERSEDES AN365-1032/	17	
		----*----		
- 5	95-344056-37	. TUBE.	1	1
		/ATTACHING PARTS/		
	¤AN525-10R8	. SCREW	2	
	¤MS20365-1032	. NUT /SUPERSEDES AN365-1032/	2	
		----*----		
	96-560013-7	BOTTLE INSTL,OXYGEN /114 CU FT/	NP	1
	96-560013-9	BOTTLE INSTL,OXYGEN /65 CU FT/.	NP	1
- 6	¤6350A34-0C	. CYLINDER,OXYGEN /114 CU FT/	1	1
- 7	24837-11	. BRACKET,MOUNTING /114 CU FT CYLINDER/	3	1
		/ATTACHING PARTS/		
	¤AN3-7A/M/	. BOLT.	2	
	¤AN960-10	. WASHER.	2	
	¤MS20365-1032	. NUT	2	
		----*----		
- 8	6350A27-0C	. CYLINDER,OXYGEN /65 CU FT/.	1	1
- 9	24838-1	. BRACKET,MOUNTING /65 CU FT/	2	1
		/ATTACHING PARTS/		
	¤AN3-7A/M/	. BOLT.	2	
	¤AN960-10	. WASHER.	1	
	¤MS20365-1032	. NUT	2	
		----*----		
- 10	¤8580	. COUPLING.	1	1
- 11	¤AN910-1	. COUPLING.	1	1
- 12	¤AN780-3	. NIPPLE.	2	1
- 13	¤96-560002-31	. TUBE ASSY,OXYGEN.	1	1
- 14	¤AN795-3	. TEE,UNION	1	1
- 15	¤96-560002-29	. TUBE ASSY,FLEXIBLE COPPER	1	1
- 16	¤26875-48	. VALVE,RECHARGE.	1	1
		/ATTACHING PARTS/		
	¤AN520-10R8	. SCREW	3	
	¤AN960-10	. WASHER.	2	
	¤MS20365-1032	. NUT	2	
		----*----		
- 17	¤AN910-1	. COUPLING.	1	1
- 18	¤AN780-3	. NIPPLE.	1	1
- 19	AN929-5D	. CAP ASSY,OXYGEN RECHARGE VALVE.	1	1
- 20	96-560012	. PLACARD,OXYGEN RECHARGE	1	1
- 21	¤MS35489-4	. GROMMET	2	1
- 22	¤96-560004-25	. TUBE ASSY	1	1
	35-560001-7	OUTLET INSTL,OXYGEN /6 OUTLETS/	NP	1
	35-560001-15	OUTLET INSTL,OXYGEN /4 OUTLETS/	NP	1
	35-560001-61	OUTLET INSTL,OXYGEN /5 OUTLETS/	NP	1
	96-560022-1	. CONSOLE ASSY,OXYGEN CONTROL	1	1
- 23	96-560022-17	. . TUBE ASSY	1	1
	96-560022-601	. . CONSOLE ASSY,OXYGEN	1	1
		/ATTACHING PARTS/		
	¤AN530-6R8	. . SCREW /UPPER EDGE/.	3	
	PK84XA6-6	. . SCREW /LOWER EDGE/.	3	
	¤A1793-6Z3	. . NUT /UPPER EDGE/.	3	
		----*----		

FIG. & INDEX NO.	PART NO.	DESCRIPTION 1 2 3 4 5 6 7	UNITS PER ASSY	USABLE ON CODE
64A- 24	96-560022-15	. . . ESCUTCHEON.	1	1
- 25	96-560022-5	. . . BRACKET,REGULATOR MOUNTING.	1	1
		/ATTACHING PARTS/		
	¤AN520-10R6	. . . SCREW	2	
	¤AN960-10L	. . . WASHER.	2	
	¤MS20365-1032	. . . NUT	2	
		----*----		
- 25A	24567-1	. . . KNOB,REGULATOR.	1	1
		/ATTACHING PARTS/		
	AN345C10	. . . NUT	1	
	BOW95-516	. . . WASHER,SPRING	1	
		----*----		
- 25B	22427-1	. . . PLATE,IDENTIFICATION /ON AND OFF/	1	1
- 26	¤24555-7	. . . REGULATOR ASSY.	1	1
		/ATTACHING PARTS/		
	AN520-10R26	. . . SCREW	2	
	¤AN960-10L	. . . WASHER.	2	
	¤MS20365-1032	. . . NUT	2	
		----*----		
- 27	¤300-3TTM	. . . TEE	1	1
- 28	96-560022-7	. . . TUBE.	1	1
- 29	¤300-8-2	. . . ELBOW	1	1
- 30	¤800322-00	. . . GAGE ASSY	1	1
- 31	¤800316	. . . OUTLET ASSY,OXYGEN.	1	1
- 32	MS20823-5D	. . . ELBOW	1	
- 33	96-560022-11	. . . TUBE ASSY	1	1
- 34	MS20825-5D	. . . TEE	1	1
- 35	AN914-1D	. . . ELBOW	1	1
- 36	¤50-534288	. . PLACARD,CONSOLE /OXYGEN CAUTION/.	1	1
- 36A	¤50-560012	. . PLACARD,PILOT OXYGEN.	1	1
- 37	¤A8970-1-327	. . LIGHT,GAGE.	1	1
	¤327	. . . BULB,GAGE LIGHT	1	1
- 38	96-560022-13	. . TUBE ASSY	1	
- 39	¤AN824-5D	. TEE	1	1
- 40	35-560001-57	. TUBE ASSY	1	1
- 41	¤AN815-5D	. UNION	1	1
- 42	35-560001-19	. TUBE ASSY	1	1
- 43	35-560001-35	. TUBE ASSY	1	1
- 44	¤AN815-5D	. UNION	1	1
- 45	35-560001-37	. TUBE ASSY	1	1
- 46	¤AN815-5D	. UNION	1	1
- 47	35-560001-21	. TUBE ASSY	1	1
- 48	¤AN815-5D	. UNION	1	1
- 49	35-560001-49	. TUBE ASSY	1	
- 50	¤AN816-5D	. NIPPLE.	1	1
- 51	¤800316	. OUTLET,OXYGEN	1	1
- 52	¤96-560004-31	. ESCUTCHEON.	1	1
- 53	¤50-560012	. PLACARD	1	1
- 54	35-560001-39	. SUPPORT,OXYGEN OUTLET	1	1
- 55	¤AN931-5-12	. GROMMET /SUPERSEDES MS35489-10/	1	1
- 56	¤MS20826-5D	. TEE	1	1
- 57	¤96-560004-13	. BRACKET,OXYGEN OUTLET SUPPORT	2	1
- 58	¤800316	. OUTLET,OXYGEN	2	1
- 59	¤96-560004-31	. ESCUTCHEON.	2	1
- 60	¤50-560012	. PLACARD	2	1
- 61	35-560001-27	. TUBE ASSY	1	1
- 62	¤AN824-5D	. TEE	1	1
- 63	35-560001-47	. TUBE ASSY	1	
- 64	¤AN815-5D	. UNION	1	
- 65	35-560001-25	. TUBE ASSY	1	1
- 66	35-560001-51	. CLAMP	1	
- 67	¤AN815-5D	. UNION	1	1
- 68	35-560001-23	. TUBE ASSY	1	1
- 69	¤AN816-5D	. NIPPLE.	2	1
- 70	35-560001-29	. TUBE ASSY	1	1

FIG. & INDEX NO.	PART NO.	DESCRIPTION 1 2 3 4 5 6 7	UNITS PER ASSY	USABLE ON CODE
64A- 71	¤MS20826-5D	. TEE	2	1
- 72	¤96-560004-15	. BRACKET,OXYGEN OUTLET SUPPORT	1	1
- 73	¤800316	. OUTLET,OXYGEN	2	1
- 74	¤96-560004-31	. ESCUTCHEON.	2	1
- 75	¤50-560012	. PLACARD	2	1
- 76	¤96-560004-21	. TUBE ASSY	1	1
- 77	¤AN929-5	. CAP	1	1
- 78	¤96-560001-59	. BOX ASSY,OXYGEN MASK STORAGE. . . . . /ATTACHING PARTS/	1	1
- 79	¤AN227-6B	. BUTTON.	2	
	¤AN227-7B	. SOCKET.	2	
		----*----		
	28313-11	. MASK ASSY,PILOTS OXYGEN /WITH MICROPHONE/ . .	1	1
	28314-11	. MASK ASSY,OXYGEN.	5	1
	800623-01	. . MASK,PILOTS OXYGEN /WITH MICROPHONE/. . . .	1	1
- 80	¤800717-00	. . MASK.	1	1
- 81	¤8540	. . FLOW INDICATOR ASSY	1	1
- 82	¤8570	. . CONNECTOR,PLUG IN	1	1
- 83	3/16IDX1/16WALL	. . TUBING.	AR	1
	¤8409	. KOILED KORD,CONTROL WHEEL SWITCH TO MIKE JACK	1	1
	¤C41006Y2-1	. SWITCH,CONTROL WHEEL MOUNTED MICROPHONE . . .	1	1
	50-364344-7	. PLATE,MIXROPHONE SWITCH MOUNTING.	1	1
	¤MS21919DG2	. CLAMP,CORD.	3	1
	¤AN530-8R6	. SCREW	2	1
	¤AN960-10	. WASHER.	3	1
	MS35489-10	. GROMMET	4	1

CODE EFFECTIVITY

1 TD-708 AND AFTER

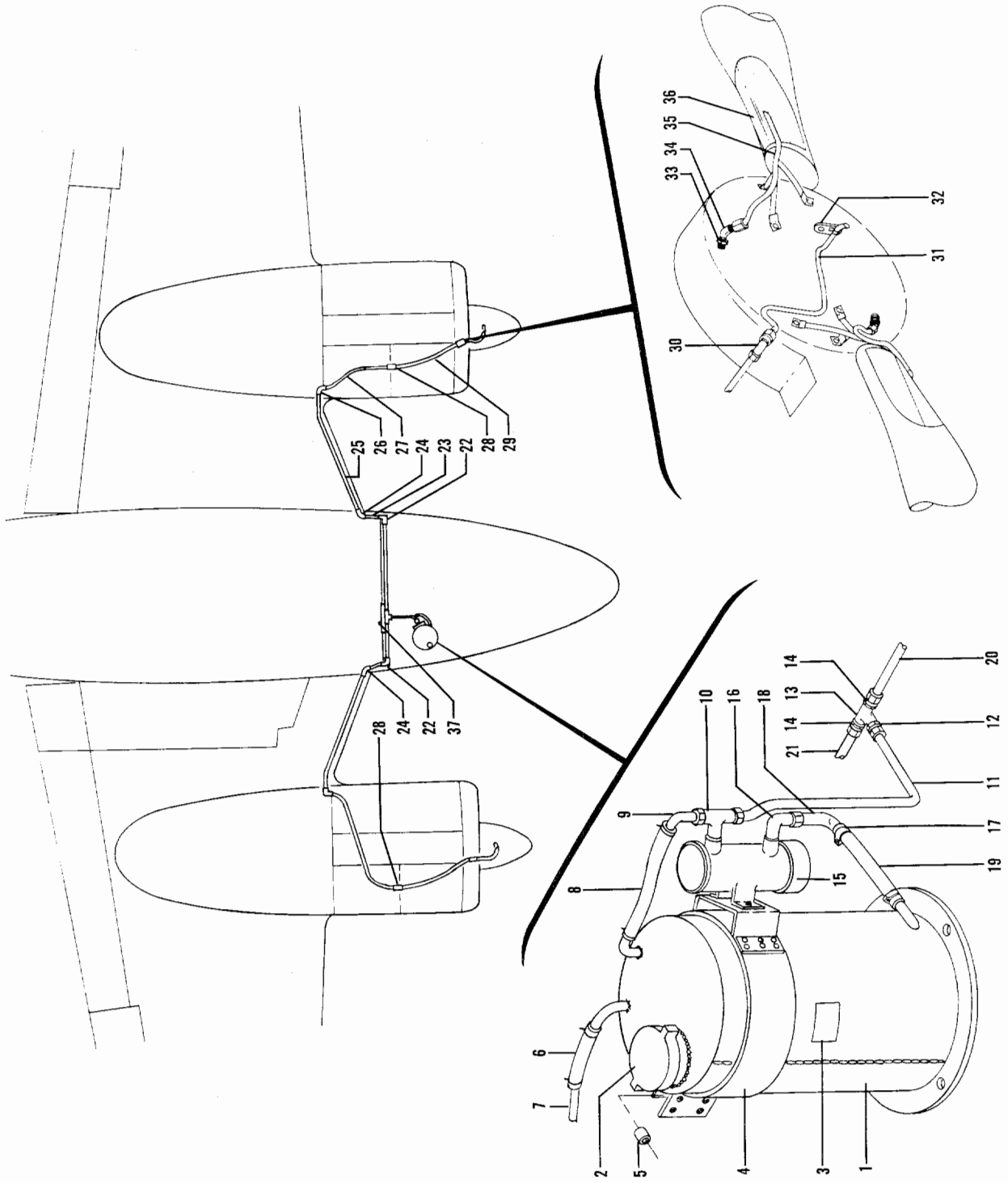

Figure 65. Propeller Anti-Icer (TD-1 thru TD-452)

FIG. & INDEX NO.	PART NO.	DESCRIPTION 1 2 3 4 5 6 7	UNITS PER ASSY	USABLE ON CODE
		ANTI-ICER INSTL,PROPELLER		1
65 - 1	95-960006-1	TANK ASSY,ANTI-ICER FLUID	1	1
- 2	IE1184	CAP,ANTI-ICER TANK /SUPERCEDES CA2137/	1	1
- 3	95-960014	PLACARD,TANK	1	1
		/ATTACHING PARTS/		
	AN520-10R	SCREW	3	
	AN960-10	WASHER	3	
	AN366F1032	NUTPLATE	2	
	22NA17A022	NUTPLATE	1	
		----*----		
- 4	95-960006-15	CLAMP ASSY	1	1
		/ATTACHING PARTS/		
- 5	100801A3-0380	SPACER	2	
	AN520-10R	SCREW	4	
	AN960-10	WASHER	4	
	MS20365-1032	NUT	2	
	AN366F1032	NUTPLATE	2	
		----*----		
- 6	95-960006-77	HOSE,VENT	1	1
- 7	95-960006-75	TUBE	1	1
	AN743-13	BRACKET	1	1
	AN742-4	CLAMP	1	1
		/ATTACHING PARTS/		
	AN520-10R	SCREW	1	
	AN960-10	WASHER	1	
	AN365-1032	NUT	1	
		----*----		
- 8	95-960006-83	HOSE	1	1
- 9	95-960006-81	TUBE ASSY	1	1
- 10	95-960006-97	WELD ASSY,TEE	1	1
- 11	95-960006-73	TUBE ASSY	1	1
- 12	AN816-4B	NIPPLE	1	1
- 13	AN917-1D	TEE	1	1
- 14	95-960006-123	WELD ASSY,NIPPLE	2	1
- 15	476439	PUMP,ANTI-ICER /SEE FIG. 48D/	1	1
- 16	AN822-4	ELBOW	1	1
- 17	AN737RM22	CLAMP	2	1
- 18	95-960006-117	TUBE ASSY	1	1
- 19	106200H4	HOSE /ORDER 1/4 ID MIL6000,SPECIFY LENGTH/	1	1
- 20	95-960006-69	TUBE ASSY	1	1
- 21	95-960006-65	TUBE ASSY	1	1
- 22	AN833-4D	ELBOW	2	1
	AN960-716	WASHER	2	1
	AN924-4	NUT	2	1
- 23	95-960006-61	TUBE ASSY,LH	1	1
	95-960006-53	TUBE ASSY,RH	1	1
- 24	AN837-4D	ELBOW	2	1
	AN960-716	WASHER	2	1
	AN924-4	NUT	2	1
- 25	95-960006-57	TUBE ASSY,LH	1	1
	95-960006-49	TUBE ASSY,RH	1	1
- 26	AN833-4D	ELBOW	2	1
	AN960-716	WASHER	2	1
	AN924-4	NUT	2	1
- 27	MS28741-4-0190	HOSE,LH	1	1
	MS28741-4-0400	HOSE,RH	1	1
- 28	AN837-4D	ELBOW	2	1
	AN960-716	WASHER	2	1
	AN924-4	NUT	2	1
- 29	95-960006-41	TUBE ASSY	2	1
- 30	AN833-4D	ELBOW	2	1
	AN960-716	WASHER	2	1
	AN924-4	NUT C C C C	2	1

FIG. & INDEX NO.	PART NO.	DESCRIPTION 1 2 3 4 5 6 7	UNITS PER ASSY	USABLE ON CODE
65 - 31	95-960006-45	TUBE ASSY	2	1
- 32	95-960006-17	BRACKET,STAND-OFF	2	1
	AN742-4	CLAMP	2	1
		/ATTACHING PARTS/		
	AN520-10R	SCREW	2	
	AN960-10	WASHER	2	
	MS20365-1032	NUT	2	
		----*----		
- 33	AN816-4D	NIPPLE	4	1
- 34	AN823-5	ELBOW	4	1
- 35	95-960006-139	WELD ASSY,TUBE & BRACKET	4	1
		/SUPERCEDES 95-960006-107&133/		
		/ATTACHING PARTS/		
	MS20073-04-06	BOLT	AR	
	AN960-416L	WASHER	AR	
		----*----		
- 36	95-960006-19	SHOE	4	1
	8447B12A	BLADE	4	1
- 37	D7270-6-5	CIRCUIT BREAKER,SWITCH TYPE	1	1

CODE EFFECTIVITY

1 TD-227, TD-238,
TD-271, TD-277,
TD-306 THRU TD-452

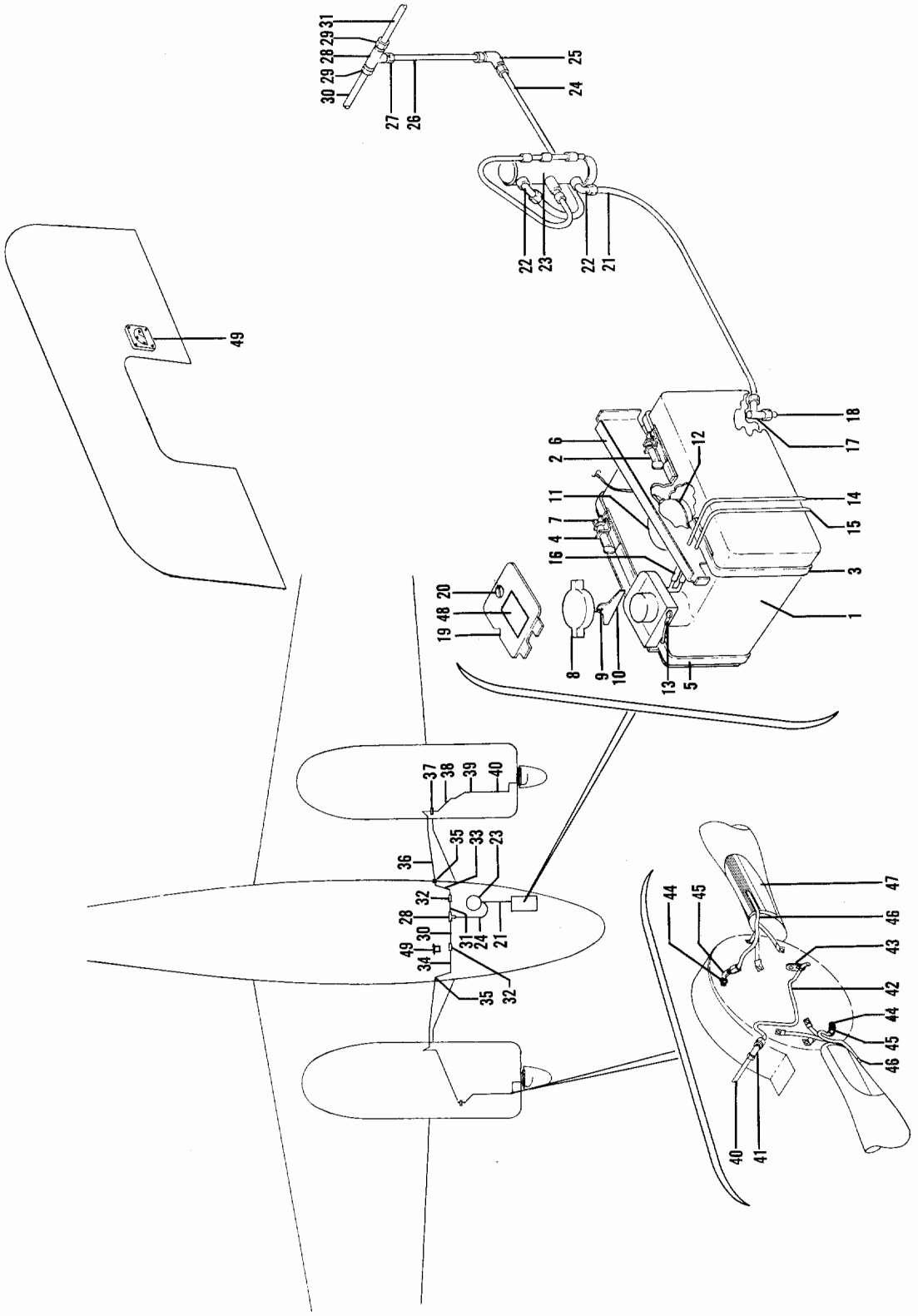

Figure 66. Propeller Anti-Icer (TD-453 & After)

FIG. & INDEX NO.	PART NO.	DESCRIPTION 1 2 3 4 5 6 7	UNITS PER ASSY	USABLE ON CODE
		ANTI-ICER INSTL,PROPELLER		1
66 - 1	95-960007-1	TANK ASSY,ANTI-ICER FLUID	1	1
		/ATTACHING PARTS/		
- 2	105798-41	CLAMP,OUTBD	1	1
- 3	105160-037	STRIP,SCUFF	1	1
- 4	105798-38	CLAMP,INBD	1	1
- 5	105160-035	STRIP,SCUFF	1	1
		----*----		
- 6	95-960007-23	CHANNEL	1	1
- 7	95-960007-35	ANGLE	1	1
		/ATTACHING PARTS/		
	AN515-8R6	SCREW	10	
	AN960-8	WASHER	10	
	MS20365-832	NUT	10	
		----*----		
	1189712	CAP ASSY,ANTI-ICER TANK	1	1
- 8	1189712-3	. CAP,FILLER	1	1
- 9	1189712-2	. CHAIN,FILLER CAP	1	1
- 10	S177	. RETAINER	1	1
	39A4240	. HOOK	2	1
- 11	50-369050	TRANSMITTER	1	1
		/ATTACHING PARTS/		
	AN502-10-10	SCREW	5	
		----*----		
- 12	35-921503	GASKET	1	1
- 13	AN749-1-6	JUMPER	1	1
		/ATTACHING PARTS/		
	AN515-8R8	SCREW	1	
	AN960-8	WASHER	1	
	MS20365-832	NUT	1	
		----*----		
- 14	95-960007-25	TUBE	1	1
- 15	95-960007-37	TUBE	1	1
- 16	106200FR4	HOSE /ORDER 1/4 ID MIL6000,SPECIFY LENGTH/	2	1
	MS35489-6	GROMMET,/SUPERCEDES AN931-4-7/	4	1
	NAS451	BUTTON,PLUG	1	1
- 17	AN826-4D	TEE	1	1
- 18	AN929-4	CAP	1	1
	95-960007-19	DOOR	1	2
- 19	95-960007-49	DOOR	1	3
- 20	98265-1-090	STUD	1	1
	99836	PIN	1	1
	99833P098	RECEPTACLE	1	1
- 21	95-960007-27	TUBE ASSY	1	1
- 22	AN822-4D	ELBOW	2	1
- 23	476439	PUMP /SEE FIG. 48D/	1	1
		/ATTACHING PARTS/		
	AN520-10R8	SCREW	2	
	AN960-10	WASHER	2	
	AN366F1032	NUTPLATE	2	
		----*----		
- 24	95-960007-29	TUBE ASSY	1	1
- 25	AN833-4D	ELBOW	1	1
	AN924-4D	NUT	1	1
- 26	95-960007-43	TUBE ASSY	1	1
- 27	AN816-4B	NIPPLE	1	1
- 28	AN917-1D	TEE	1	1
- 29	95-960006-123	WELD ASSY,NIPPLE	2	1
- 30	95-960007-39	TUBE ASSY	1	1
- 31	95-960007-41	TUBE ASSY	1	1
- 32	AN815-4D	UNION	2	1
- 33	95-960007-31	TUBE ASSY	1	1
- 34	95-960007-33	TUBE ASSY	1	1

FIG. & INDEX NO.	PART NO.	DESCRIPTION 1 2 3 4 5 6 7	UNITS PER ASSY	USABLE ON CODE
66 - 35	AN837-4D	ELBOW	2	1
	AN960-716	WASHER	2	1
	AN924-4	NUT	2	1
- 36	95-960006-57	TUBE ASSY,LH	1	1
	95-960006-49	TUBE ASSY,RH	1	1
- 37	AN833-4D	ELBOW	2	1
	AN960-716	WASHER	2	1
	AN924-4	NUT	2	1
- 38	MS28741-4-0190	HOSE,LH	1	1
	MS28741-4-0400	HOSE,RH	1	1
- 39	AN837-4D	ELBOW	2	1
	AN960-716	WASHER	2	1
	AN924-4	NUT	2	1
- 40	95-960006-41	TUBE ASSY	2	1
- 41	AN833-4D	ELBOW	2	1
	AN960-716	WASHER	2	1
	AN924-4	NUT	2	1
- 42	95-960006-45	TUBE ASSY	2	1
- 43	95-960006-17	BRACKET,STAND-OFF	2	1
	AN742-4	CLAMP	2	1
		/ATTACHING PARTS/		
	AN520-10R	SCREW	2	
	AN960-10	WASHER	2	
	MS20365-1032	NUT	2	
		----*----		
- 44	AN816-4D	NIPPLE	4	1
- 45	AN823-5	ELBOW	4	1
- 46	95-960006-139	WELD ASSY,TUBE & BRACKET	4	1
		/SUPERCEDES 95-960006-107&133/		
		/ATTACHING PARTS/		
	MS20073-04-06	BOLT	AR	
	AN960-416L	WASHER	AR	
		----*----		
- 47	95-960006-19	SHOE	4	1
	8447B12A	BLADE	4	1
- 48	95-960015	PLACARD	1	1
- 49	50-384001-31	GAGE,QUANTITY	1	1
		/ATTACHING PARTS/		
	AN507B632	SCREW	4	
	A8944-632-24A	NUT	4	
		----*----		
	CB3105	CIRCUIT BREAKER,SWITCH TYPE	1	1
	75 OHM 10 WATT	RESISTOR	1	1
	43C2-15K	POTENTIOMETER	1	1
	AN749-1-4	JUMPER	1	1

CODE	EFFECTIVITY	CODE	EFFECTIVITY
1	TD-453 AND AFTER	2	TD-453 THRU TD-477
3	TD-478 AND AFTER		

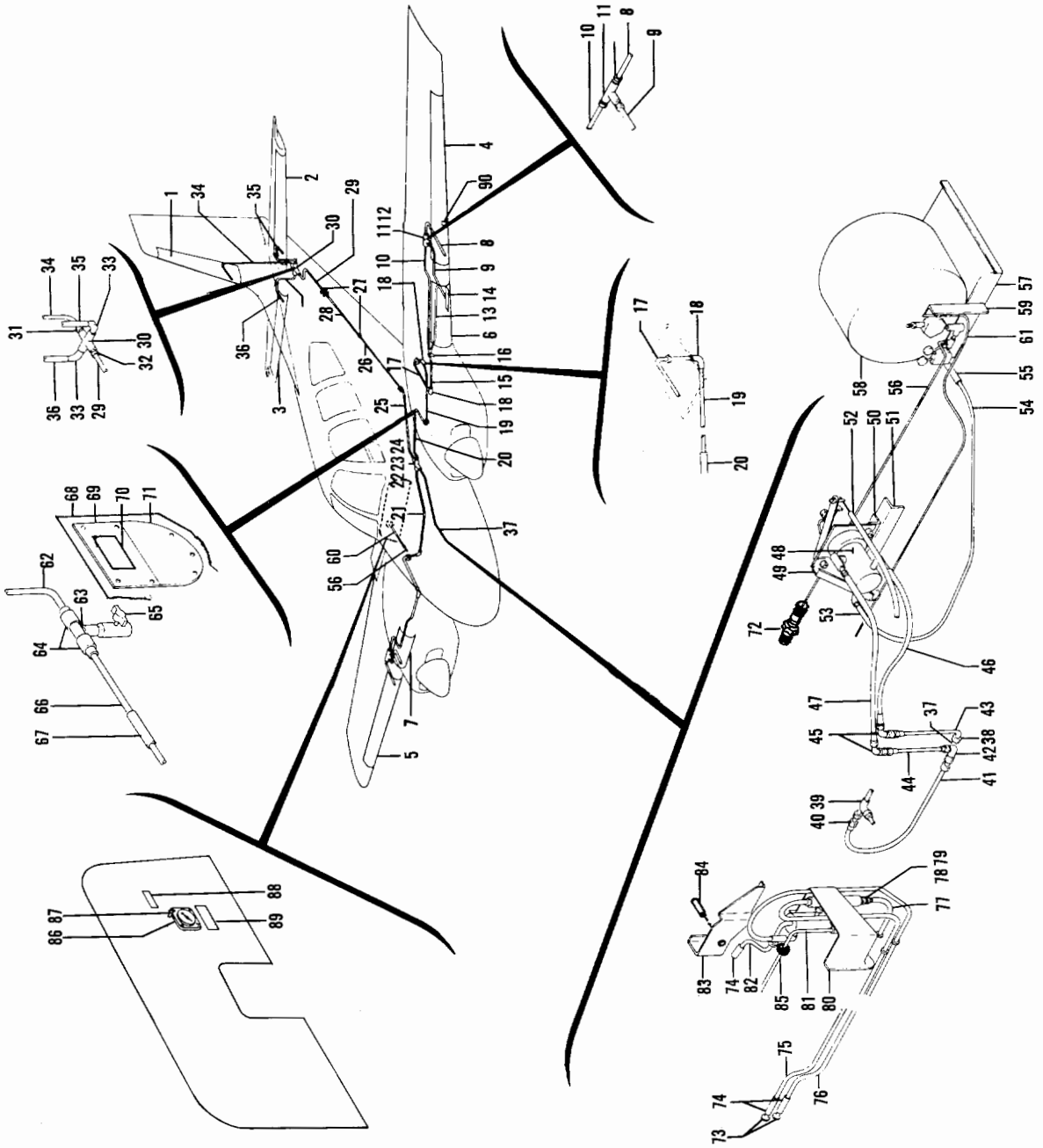

Figure 67. Deicer System (TD-1 thru TD-707)

FIG. & INDEX NO.	PART NO.	DESCRIPTION 1 2 3 4 5 6 7	UNITS PER ASSY	USABLE ON CODE
67 -	95-970000	DEICER INSTL.	NP	1
	95-970000-125	DEICER INSTL.	NP	2
	95-970000-147	DEICER INSTL.	NP	3
	95-970000-177	DEICER INSTL.	NP	4
	95-970000-187	DEICER INSTL.	NP	8
- 1	¤23S2004-4-1	. BOOT,VERTICAL STABILIZER.	1	1
	23S2004-6-1	. BOOT,VERTICAL STABILIZER.	1	6
- 2	¤23S2004-3-1	. BOOT,LH HORIZONTAL STABILIZER	1	1
	¤23S2004-5-1	. BOOT,LH HORIZONTAL STABILIZER	1	6
- 3	¤23S2004-3-2	. BOOT,RH HORIZONTAL STABILIZER	1	1
	¤23S2004-5-2	. BOOT,RH HORIZONTAL STABILIZER	1	6
- 4	¤23S2004-2-1	. BOOT,LH OUTBD WING.	1	7
	¤23S2004-10-1	. BOOT,LH OUTBD WING.	1	3
	23S2004-13-1	. BOOT,LH OUTBD WING.	1	12
- 5	¤23S2004-2-2	. BOOT,RH OUTBD WING.	1	7
	23S2004-10-2	. BOOT,RH OUTBD WING.	1	5
- 6	¤23S2004-1-1	. BOOT,LH INBD WING	1	7
- 7	¤23S2004-1-2	. BOOT,RH INBD WING	1	7
- 8	95-970000-5	. HOSE.	2	7
- 9	95-970000-7	. HOSE.	2	7
- 10	95-970000-9	. HOSE.	2	7
	¤AN737RM26	. CLAMP /2 REQUIRED PER HOSE/	6	7
- 11	¤AN917-2D	. TEE	2	7
- 12	¤AN840-6D	. NIPPLE.	6	7
- 13	¤95-970000-149	. HOSE.	2	5
	¤AN737RM26	. CLAMP	4	5
- 14	¤95-970000-107	. STRIP,STALL	1	6
- 15	95-970000-11	. TUBE ASSY	2	7
	95-970000-153	. TUBE ASSY,LH.	1	5
	95-970000-154	. TUBE ASSY,RH.	1	5
- 16	AN839-6D	. UNION	2	7
	¤AN960-916	. WASHER.	2	7
	¤AN924-6D	. NUT	2	7
- 17	95-970000-57	. TUBE ASSY	2	11
- 18	¤AN821-6D	. ELBOW	4	11
- 19	95-970000-15	. TUBE ASSY,LH.	1	11
	95-970000-16	. TUBE ASSY,RH.	1	11
- 20	95-970000-33	. HOSE,LH	1	11
- 21	95-970000-17	. HOSE,RH	1	11
	¤AN737RM26	. CLAMP	4	11
- 22	¤AN918-2D	. CROSS	1	11
- 23	¤AN840-6D	. NIPPLE.	2	11
- 24	¤AN842-6D	. ELBOW	2	11
- 25	95-970000-29	. HOSE.	1	11
	¤AN737RM26	. CLAMP	2	11
- 26	95-970000-27	. TUBE ASSY	1	11
- 27	¤AN832-6D	. UNION	2	11
	¤AN960-916	. WASHER.	2	11
	¤AN924-6D	. NUT	2	11
- 28	95-970000-119	. TUBE ASSY	1	11
- 29	95-970000-121	. TUBE ASSY	1	11
- 30	¤AN918-2D	. CROSS	1	11
- 31	¤AN840-6D	. NIPPLE.	1	11
- 32	¤AN816-6D	. UNION	1	11
- 33	¤AN842-6D	. ELBOW	2	11
- 34	95-970000-23	. HOSE.	1	1
	95-970000-127	. HOSE.	1	6
- 35	95-970000-21	. HOSE,LH	1	11
- 36	95-970000-19	. HOSE,RH	1	11
	¤AN737RM26	. CLAMP	6	11
- 37	95-970000-105	. HOSE ASSY	1	11
	¤AN737RM26	. CLAMP	1	11
- 38	¤AN832-6D	. UNION	1	9
	AN960D916	. WASHER.	1	9
	¤AN924-6D	. NUT	1	9
- 39	95-970000-1	. TEE	1	11

FIG. & INDEX NO.	PART NO.	DESCRIPTION 1 2 3 4 5 6 7	UNITS PER ASSY	USABLE ON CODE
67 - 40	¤AN816-8D	. UNION	1	11
- 41	95-970000-97	. TUBE ASSY	1	11
- 42	¤AN833-6D	. ELBOW	1	9
	AN960D916	. WASHER	1	9
	¤AN924-6D	. NUT	1	9
- 43	95-970000-95	. TUBE ASSY,PRESSURE	1	9
- 44	95-970000-93	. TUBE ASSY,VACUUM	1	9
- 45	¤AN833-6D	. ELBOW	2	9
	AN960D916	. WASHER	2	9
	¤AN924-6D	. NUT	2	9
- 46	95-970000-91	. HOSE ASSY,PRESSURE	1	9
- 47	95-970000-87	. HOSE ASSY,VACUUM	1	9
	¤AN737RM26	. CLAMP	2	9
- 48	¤3D1348	. VALVE ASSY,DISTRIBUTOR	1	11
		/ATTACHING PARTS/		
	AN520R1032	. SCREW	3	
	¤AN960-10	. WASHER	3	
	¤MS20365-1032	. NUT /SUPERSEDES AN365-1032/	3	
		----*----		
- 49	95-970000-113	. SUPPORT	1	11
		/ATTACHING PARTS/		
	AN520R1032	. SCREW	1	
		----*----		
- 50	95-970000-89	. ANGLE	1	11
		/ATTACHING PARTS/		
	AN520R1032	. SCREW	2	
		----*----		
- 51	95-970000-115	. ANGLE ASSY,SUPPORT	1	9
- 52	3D1349	. CABLE,VALVE CONTROL	1	9
- 53	95-970000-99	. HOSE ASSY,PRESSURE	1	9
	¤AN737RM26	. CLAMP	2	9
- 54	¤95-970000-101	. TUBE	1	9
	¤AN742-6	. CLAMP	2	9
- 55	95-970000-37	. HOSE ASSY	1	9
	¤AN737RM26	. CLAMP	2	9
- 56	¤95-970000-55	. TUBE	1	11
	AN819-4	. SLEEVE,COUPLING	2	11
	AN818-4	. NUT,COUPLING	2	11
- 57	3D1347	. PLATE ASSY	1	11
- 58	5D1048	. RESERVOIR ASSY	1	11
- 59	95-970000-123	. ANGLE	1	11
	AN742-3	. CLAMP	2	11
		/ATTACHING PARTS/		
	AN520R1032	. SCREW	1	
		----*----		
- 60	¤MS28741-4-0230	. HOSE ASSY	1	11
- 61	¤3D1247	. CABLE,CONTROL	1	11
	96-324068	. AIR SOURCE INSTL,EMERGENCY STATIC	NP	8
- 62	95-970000-141	. . TUBE ASSY	1	8
- 63	¤AN825-4D	. . TEE	1	8
	¤AN910-1D	. . COUPLING	1	8
- 64	¤AN818-4D	. . NUT,COUPLING	2	8
	¤AN819-4Z	. . SLEEVE,COUPLING	2	8
- 65	¤K9000S1A	. . VALVE,DRAIN /SUPERSEDES 18081/	1	8
- 66	95-970000-143	. . TUBE ASSY	1	8
- 67	95-970000-137	. . SPLICE	1	8
- 68	95-970000-135	. . PANEL,UPHOLSTERY	1	8
	¤95-970000-145	. . PLATE ASSY	1	8
- 69	95-970000-139	. . PLATE	1	8
- 70	¤18-420016	. . PLACARD	1	8
- 71	95-970000-151	. . COVER	1	8
		/ATTACHING PARTS/		
	AN515-6R	. . SCREW	7	
		----*----		

FIG. & INDEX NO.	PART NO.	DESCRIPTION 1 2 3 4 5 6 7	UNITS PER ASSY	USABLE ON CODE
67 - 72	3D1312	ORIFICE ASSY.	1	11
	¤AN960-716	WASHER.	1	11
	¤AN924-4D	NUT	1	11
- 73	AN807-6D	ADAPTER	2	10
	AN960D916	WASHER.	2	10
	¤AN924-6D	NUT	2	10
- 74	95-970000-161	HOSE.	5	10
	¤AN737RM26	CLAMP	10	10
- 75	95-970000-155	HOSE,VACUUM	1	10
- 76	95-970000-157	HOSE,PRESSURE	1	10
	¤AN737RM26	CLAMP	4	10
- 77	95-970000-165	TUBE.	1	10
- 78	¤AN912-2D	BUSHING,REDUCER	1	10
- 79	¤AN840-6D	ADAPTER	1	10
- 80	95-970000-163	COVER	1	10
		/ATTACHING PARTS/		
	AN520R10	SCREW	5	
		----*----		
- 81	95-970000-169	HOSE.	1	10
	¤AN737RM26	CLAMP	2	10
- 82	95-970000-159	TUBE ASSY	1	10
- 83	95-970000-167	COVER	1	10
		/ATTACHING PARTS/		
	AN3A	BOLT.	1	
	¤AN960-10L	WASHER.	1	
- 84	102933D4ZG1650	SPACER.	1	10
	¤MS20365-1032	NUT /SUPERSEDES AN365-1032/	1	
		----*----		
- 85	3D1473	CABLE,VALVE CONTROL	1	10
- 86	¤50-380027	GAGE,DEICER	1	11
	¤AN815-4C	UNION	1	11
	¤MS28778-4	PACKING	1	11
- 87	¤A8970-1-327	LIGHT,POST.	1	11
- 88	95-970012	PLACARD	1	11
- 89	3D1313	PLACARD	1	11
- 90	¤168-3	SWITCH,STALL WARNING.	1	11

CODE	EFFECTIVITY	CODE	EFFECTIVITY
1	TD-1 THRU TD-302	2	TD-303 THRU TD-452
3	TD-453 THRU TD-525	4	TD-526 THRU TD-533
5	TD-453 THRU TD-707	6	TD-303 THRU TD-707
7	TD-1 THRU TD-452	8	TD-534 THRU TD-707
9	TD-1 THRU TD-457	10	TD-458 THRU TD-707
11	TD-1 THRU TD-707	12	TD-526 THRU TD-707

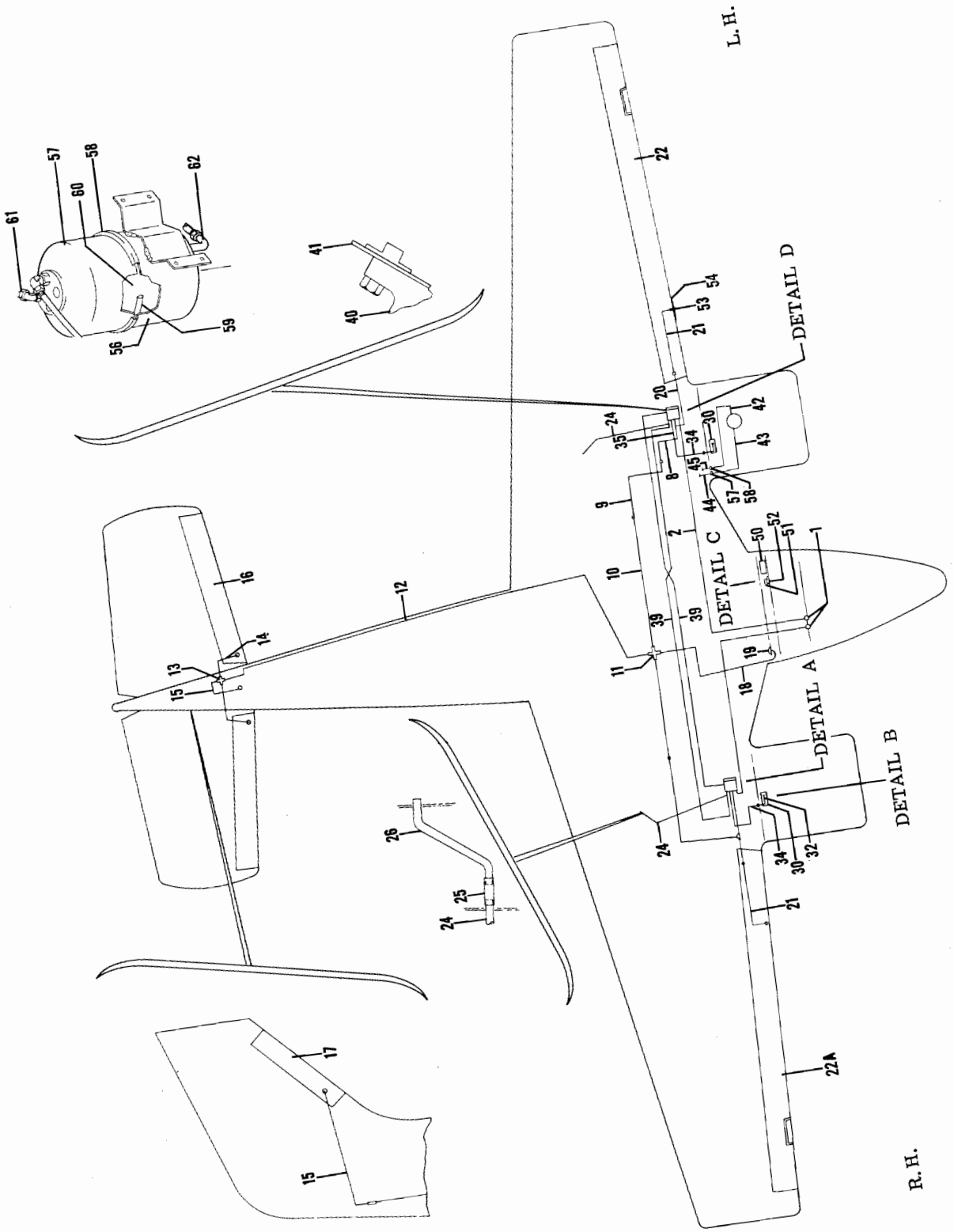

Figure 68. Surface Deicer (TD-534 thru TD-707)
(Sheet 1 of 2 Sheets)

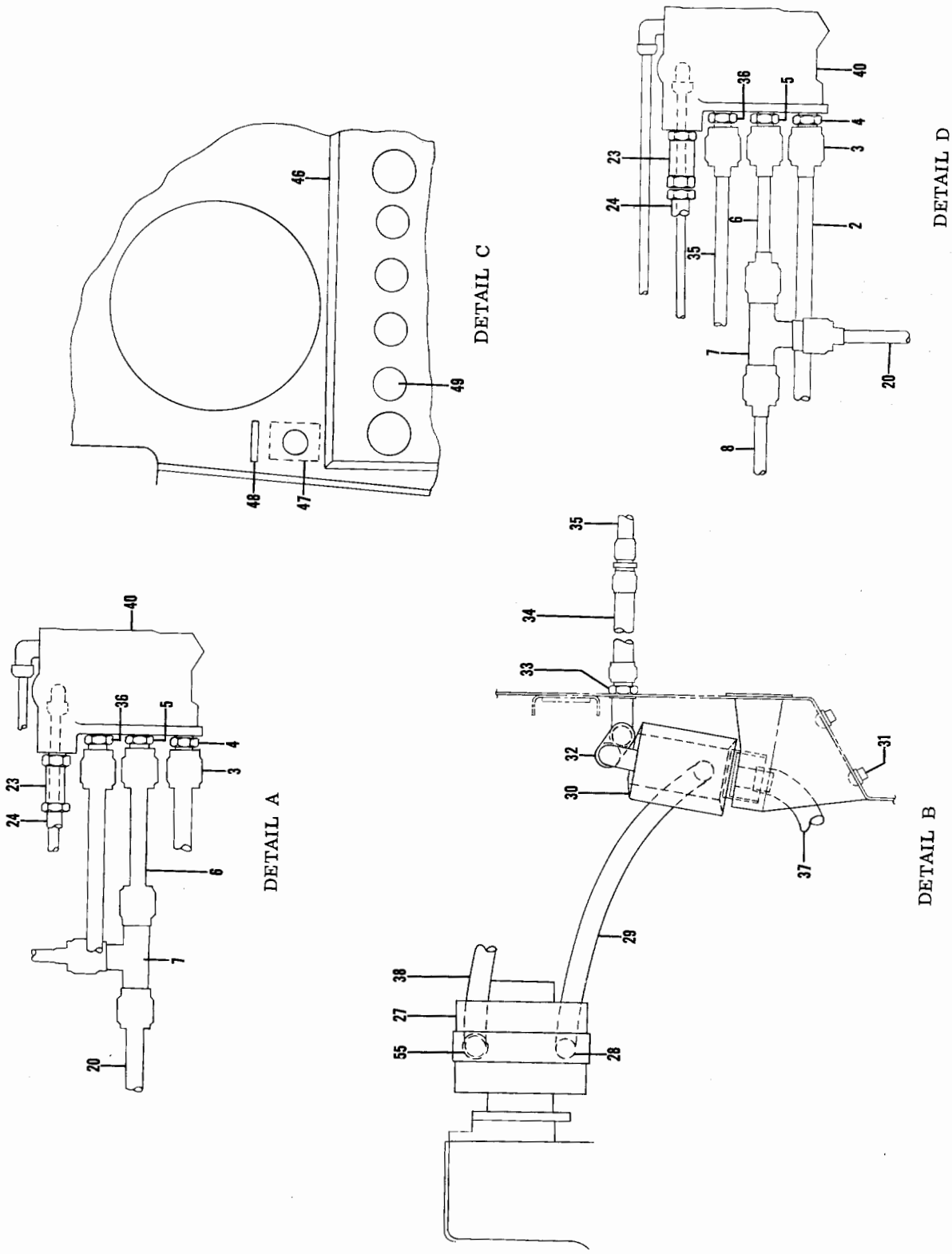

Figure 68. Surface Decier (TD-534 thru TD-707)
(Sheet 2 of 2 Sheets)

FIG. & INDEX NO.	PART NO.	DESCRIPTION 1 2 3 4 5 6 7	UNITS PER ASSY	USABLE ON CODE
68	96-970001-3	DEICER INSTL.	NP	1
- 1	268P 1/4X3/8	. CONNECTOR,3/8 PLASTIC TO 1/4 PT	2	1
- 2	96-970001-63	. TUBE ASSY,LH.	1	1
	96-970001-65	. TUBE ASSY,RH.	1	1
- 3	¤AN910-3D	. COUPLING.	2	1
- 4	¤AN816-8D	. NIPPLE.	2	1
- 5	¤AN919-120	. REDUCER	2	1
- 6	¤96-970001-23	. TUBE ASSY	2	1
- 7	¤AN824-6D	. TEE	2	1
- 8	96-970001-33	. TUBE ASSY,LH /TOO TAIL BOOTS/	1	1
	96-970001-19	¤ TUBE ASSY,RH /TOO TAIL BOOTS/	1	1
- 9	96-970001-53	. TUBE ASSY,LH.	1	1
	96-970001-54	. TUBE ASSY,RH.	1	1
- 10	¤95-970000-33	. HOSE,LH	1	1
	96-970001-173	. TUBE ASSY,RH /SUPERSEDES 95-970000-17/.	1	1
- 11	¤AN918-2D	. CROSS	1	1
	¤AN912-2D	. BUSHING	1	1
	¤AN911-2D	. NIPPLE.	1	1
	¤AN842-6D	. ELBOW	2	1
- 12	96-970001-11	. TUBE ASSY	1	1
- 13	¤AN918-3D	. CROSS	1	1
- 14	96-970001-167	. TUBE ASSY,LH /SUPERSEDES 96-970001-7/	1	1
	96-970001-165	. TUBE ASSY,RH /SUPERSEDES 96-970001-5/	1	
- 15	96-970001-169	. TUBE ASSY /SUPERSEDES 96-970001-15/	1	
- 16	¤23S2004-5-1	. BOOT,HORIZONTAL STABILIZER LH	1	
	¤23S2004-5-2	. BOOT,HORIZONTAL STABILIZER RH	1	
- 17	¤23S2004-6-1	. BOOT,CERTICAL STABILIZER.	1	
- 18	96-970001-47	. TUBE ASSY	1	
- 19	50-380016-13	. GAGE,DEICING PRESSURE	1	
- 20	96-970001-61	. TUBE ASSY,LH.	1	1
	96-970001-21	. TUBE ASSY,RH.	1	1
- 21	¤95-970000-149	. HOSE.	2	1
- 22	¤23S2004-13-1	. BOOT,WING LH.	1	1
- 22A	¤23S2004-10-2	. BOOT,WING RH.	1	1
- 23	¤96-970001-77	. VALVE,RELIEF.	2	1
- 24	96-970001-45	. TUBE,VENT LH.	1	1
	96-970001-43	. TUBE VENT RH.	1	1
- 25	10620048-12	. TUBING,VENT	2	1
- 26	¤96-970001-41	. TUBE,VENT	2	1
- 27	¤50-380090	. PUMP,VACUUM /SUPERSEDES A505CDD/.	2	1
- 28	¤AN844-10	. ELBOW	2	1
- 29	106200-10-84	. HOSE.	2	1
- 30	¤96-500020-23	. SEPARATOR,OIL	2	1
- 31	AN515-8R8	. SCREW	2	
		----*----		
- 32	106200FR10-16	. HOSE.	2	1
- 33	¤AN838-10	. ELBOW	2	1
	¤AN924-10D	. NUT	2	1
	¤AN960-1016	. WASHER.	2	1
- 34	96-970001-49	. TUBE.	2	1
- 35	96-970001-31	. TUBE,LH	1	1
	96-970001-27	. TUBE,RH	1	1
- 36	¤AN815-8D	. UNION	2	1
- 37	106200FR4-106	. HOSE,OIL SEPARATOR DRAIN.	2	
- 38	MS28741-10-0201	. HOSE ASSY,LH.	1	1
7S	28741-10-0325	. HOSE ASSY,RH.	1	1
- 39	¤96-970001-35	. TUBE,CONTROL UNIT INTERCONNECT.	2	1
- 40	232811-3	. VALVE ASSY,DEICER CONTROL	2	1
		/ALTERNATE FOR 232811/		
		/ATTACHING PARTS/		
	AN3-5A/M/	. BOLT.	3	
		----*----		
- 41	96-970001-37	. BRACKET,CONTROL ASSY LH	1	1
	96-970001-39	. BRACKET,CONTROL ASSY RH	1	1
	96-970001-55	. SPACER,BRACKET.	2	1

FIG. & INDEX NO.	PART NO.	DESCRIPTION 1 2 3 4 5 6 7	UNITS PER ASSY	USABLE ON CODE
68 - 42	¤MS28741-6-0180	. HOSE ASSY,FUEL 3/8 OD /USE WITH DEICER/ . . .	2	1
- 43	¤MS28741-4-0250	. HOSE ASSY,FUEL /USE WITH DEICER/.	2	1
- 44	96-970001-67	. TUBE ASSY,FUEL 1/4 OD LH /USE WITH DEICER/. .	1	1
	96-970001-71	. TUBE ASSY,FUEL 1/4 OD RH /USE WITH DEICER/. .	1	1
- 45	96-970001-69	. TUBE ASSY,FUEL 3/8 OD LH /USE WITH DEICER/. .	1	1
	96-970001-73	. TUBE ASSY,FUEL 3/8 OD RH.	1	1
- 46	96-324034-9	. PANEL,SWITCH /USE WITH GENERATORS/.	1	1
	96-324034-7	. PANEL,SWITCH /USE WITH ALTERNATORS/	1	1
- 47	7274-2-5	. BREAKER,CIRCUIT	1	1
- 48	¤96-970012	. PLACARD,SURFACE DEICER.	1	1
- 49	¤MS35058-27	. SWITCH.	1	1
- 50	¤50-380048-1	. RELAY	1	1
		/ATTACHING PARTS/		
	¤AN960-6L	. WASHER.	2	
	AN515-6-4	. SCREW	2	
		----*----		
- 51	¤GT4738	. RELAY	1	1
		/ATTACHING PARTS/		
	AN515-4-4	. SCREW	2	
	¤AN960-4L	. WASHER.	2	
	¤MS20365-440	. NUT	2	
		----*----		
- 52	96-970001-51	. BRACKET	1	1
- 53	¤168-3	. DETECTOR UNIT,STALL WARNING	1	1
		/ATTACHING PARTS/		
	AN507-632-20	. SCREW	1	
	AN507-632-8	. SCREW	3	
		----*----		
- 54	¤95-970000-107	. STRIP,STALL WARNING	1	1
- 55	¤AN816-10	. NIPPLE /LH ONLY/.	1	1
	MS20822-8	. ELBOW /RH ONLY/	1	1
	96-500022-27	FILTER ASSY,AUTOPILOT	1	1
	96-500022-31	FILTER ASSY,AUTOPILOT	1	1
		/ATTACHING PARTS/		
	AN525-10R	SCREW	4	
	AN366F1032	NUTPLATE.	4	
		----*----		
- 56	96-500022-25	. HOUSING,FILTER.	1	1
- 57	96-500022-15	. HOUSING,FILTER.	1	1
- 58	¤EX811-61-1	. CLAMP	1	1
- 60	¤200661	. O RING.	1	1
		. FILTER.		1
- 61	AN822-10D	. ELBOW	1	
- 62	AN822-89	. ELBOW	1	

CODE EFFECTIVITY

1 TD-534 THRU TD-707

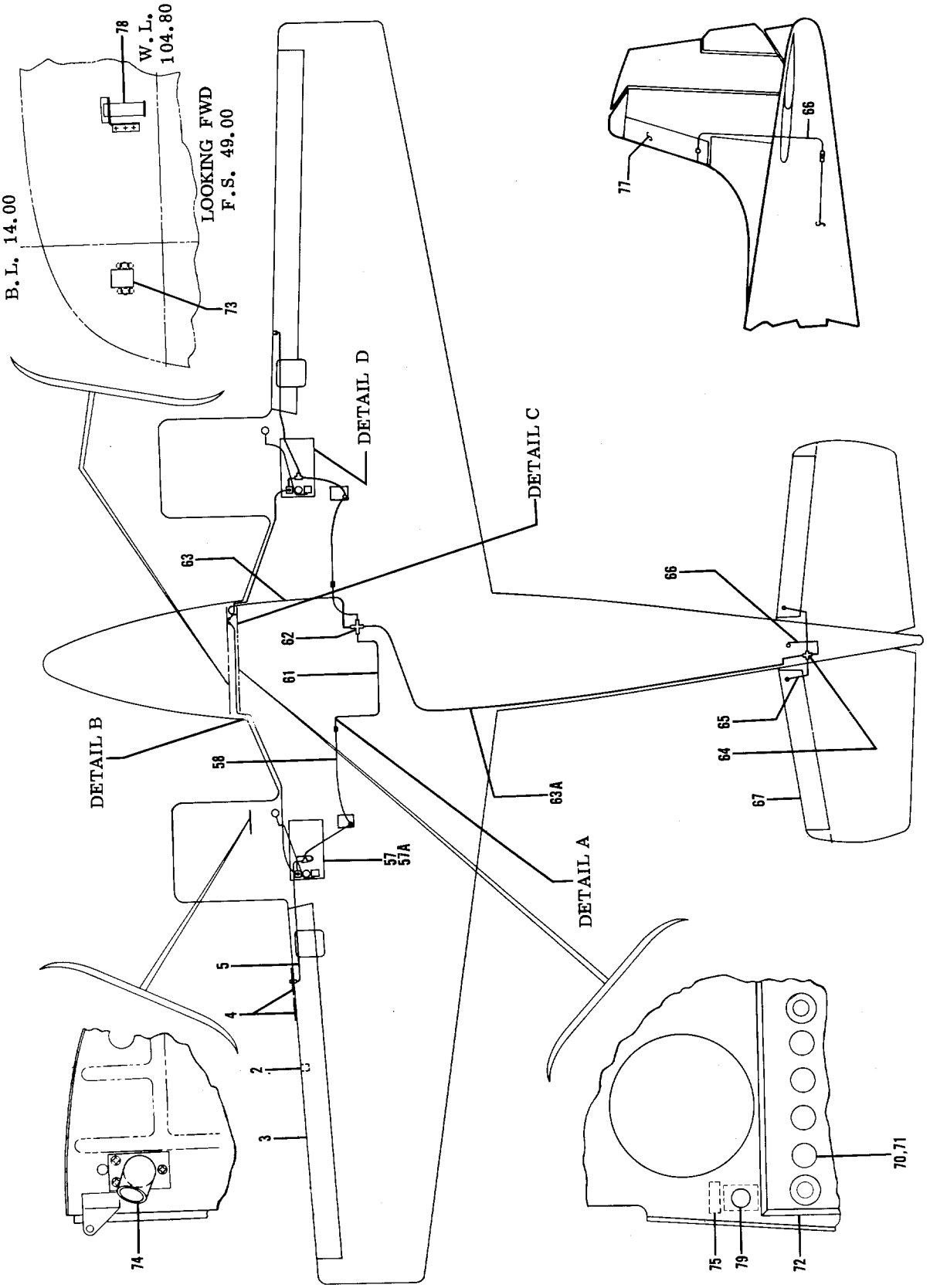

Figure 69. Deicer System (B. F. Goodrich) (TD-534 thru TD-707)
(Sheet 1 of 2 Sheets)

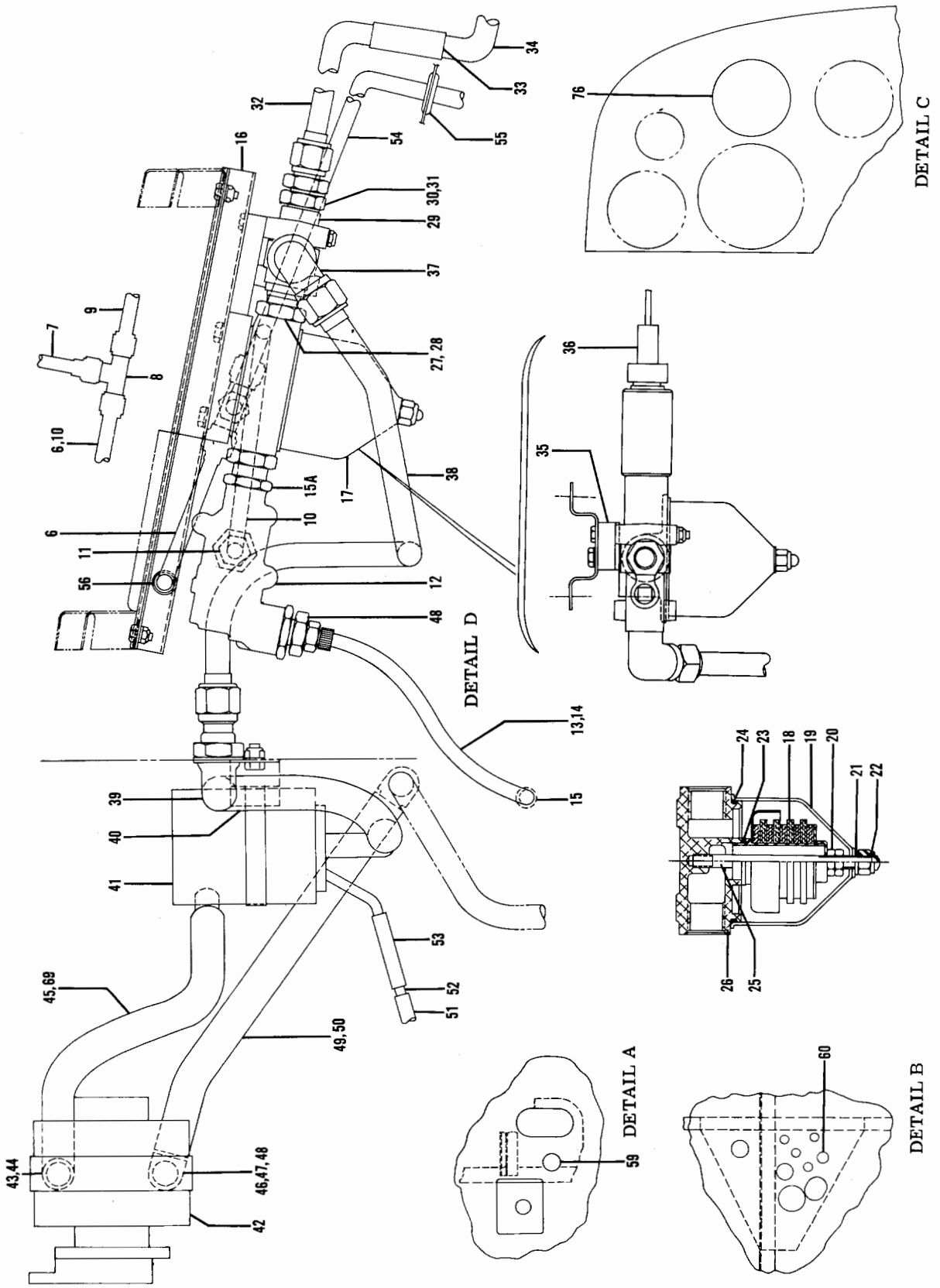

Figure 69. Deicer System (B. F. Goodrich) (TD-534 thru TD-707) (Sheet 2 of 2 Sheets)

FIG. & INDEX NO.	PART NO.	DESCRIPTION 1 2 3 4 5 6 7	UNITS PER ASSY	USABLE ON CODE
69	96-970002-61	DEICER INSTL,AUTOMATIC /B.F. GOODRICH/.	NP	1
- 1		. DELETED		
- 2	95-970000-133	. DETECTOR,STALL WARNING.	1	1
- 3	23S2004-13-1	. BOOT,WING DEICER LH	1	1
	23S2004-13-2	. BOOT,WING DEICER RH	1	1
- 4	130411-00900	. STALL STRIP	1	1
- 5	95-970000-149	. HOSE,DEICER /FROM BOOT TO VALVE/.	2	1
		/ATTACHING PARTS/		
	AN737RM24	. CLAMP	2	
		----*----		
- 6	96-970001-61	. TUBE,FROM WING BOOT TO SHUTTLE VALVE LH . . .	1	1
- 7	96-970001-21	. TUBE,FROM WINE BOOT TO SHUTTLE VALVE RH . . .	1	1
- 8	AN824-6D	. TEE,BETWEEN SHUTTLE VALVE AND BOOT.	2	1
- 9	96-970002-39	. TUBE,FROM SHUTTLE VALVE TO BOOT LH.	1	1
- 10	96-970002-41	. TUBE,FROM SHUTTLE VALVE TO BOOT RH.	1	1
- 11	AN919-14D	. REDUCER,SHUTTLE VALVE	2	1
- 12	3D1549-02A1	. VALVE,SHUTTLE	2	1
- 13	96-970001-63	. TUBE,FROM SHUTTLE VALVE TO PRESSURE GAGE LH .	1	1
- 14	96-970001-65	. TUBE,FROM SHUTTLE VALVE TO PRESSURE GAGE RH .	1	1
- 15	115005-6	. GROMMET,PRESSURE GAGE HOSE AT INBD NACELLE. .	2	1
- 15	AN832-10D	. UNION,FROM SHUTTLE VALVE TO FILTER.	2	1
	AN6290-10	. GASKET,UNION.	2	1
	AN924-10D	. NUT,UNION	2	1
- 16	96-970002-45	. BRACKET,FILTER.	2	1
		/ATTACHING PARTS/		
	AN3-3A	. BOLT.	2	
	AN960-10	. WASHER.	2	
	MS20365-1032	. NUT	2	
		----*----		
- 17	50-389083	. FILTER ASSY,DEICER.	2	1
		/ATTACHING PARTS/		
	AN4H12A	. BOLT.	2	
	AN960-416	. WASHER.	2	
		----*----		
- 18	H9W334-231	. . CARTRIDGE	1	1
- 19	02FC07A158	. . CONTAINER	1	1
- 20	21051C	. . NUT,HEX JAM	2	1
- 21	38004	. . WASHER,SEAL	1	1
- 22	42NKE054	. . NUT,LOCK.	1	1
- 23	H9FF06	. . GASKET,SEAL	1	1
- 24	350106	. . GASKET,O RING	1	1
- 25	H9W334-134	. . STUD,CENTER	1	1
- 26	H9W1019-156	. . HEAD.	1	1
- 27	AN924-10D	. NUT,BETWEEN FILTER & CONTROL VALVE.	1	1
- 28	AN6290-10	. GASKET,BETWEEN FILTER & CONTROL VALVE	1	1
- 29	3D1542-03	. VALVE,DEICER CONTROL.	1	1
- 30	AN912-4D	. BUSHING,CONTROL VALVE	1	1
- 31	AN816-8D	. NIPPLE,CONTROL VALVE.	1	1
- 32	96-970002-23	. TUBE,CONTROL VALVE DRAIN LH	1	1
	96-970002-25	. TUBE,CONTROL VALVE DRAIN RH	1	1
- 33	106200H8-12	. HOSE,DRAIN.	1	1
		/ATTACHING PARTS/		
	AN737RM24	. CLAMP	2	
- 34	96-970001-41	. TUBE,CONTROL VALVE DRAIN.	1	1
	MS35489-15	. GROMMET%DRAIN	2	1
		. GROMMET,DRAIN		1
- 35	96-970002-47	. SPACER,FILTER	2	1
- 36	MS3106R12S3S	. PLUG,CONTROL VALVE.	2	1
- 37	MS20822-10D	. ELBOW,CONTROL VALVE TO OIL SEPARATOR.	2	1
- 38	96-970002-63	. TUBE,CONTROL VALVE TO OIL SEPARATOR LH. . . .	1	1
	96-970002-65	. TUBE,CONTROL VALVE TO OIL SEPARATOR RH. . . .	1	1
- 39	AN838-10	. ELBOW,BULKHEAD.	2	1
		/ATTACHING PARTS/		
	AN924-10D	. NUT	2	
	AN960-1416	. WASHER.	2	
		----*----		

FIG. & INDEX NO.	PART NO.	DESCRIPTION 1 2 3 4 5 6 7	UNITS PER ASSY	USABLE ON CODE
69 - 40	106200FR10-56	. HOSE,OIL SEPARATOR TO FIREWALL.	2	1
- 41	96-380029	. SEPARATOR,OIL	2	1
		/ATTACHING PARTS/		
	AN4-4A	. BOLT.	4	
	AN960-416	. WASHER.	4	
	MS20365-428	. NUT	4	
	AN737TW98	. CLAMP	2	
		----*----		
- 42	50-380090	. PUMP,DEICER VACUUM.	2	1
- 43	AN844-10	. ELBOW,VACUUM PUMP	2	1
- 44	AN840-10	. ADAPTER,VACUUM PMUP	2	1
- 45	106200FR10-72	. HOSE,VACUUM PUMP TO OIL SEPARATOR	2	1
		/ATTACHING PARTS/		
	AN737RM24	. CLAMP	2	
		----*----		
- 46	AN840-6D	. ADAPTER,VACUUM PUMP	2	1
- 47	1K1-6-10	. ELBOW,VACUUM PUMP	2	1
- 48	AN912-4D	. BUSHING,VACUUM PUMP	2	1
- 49	106200H10-35	. HOSE,VACUUM PUMP TO FIREWALL /LH/	2	1
	96-910001-17	. TUBE,ENGINE BREATHER.	1	1
	96-910002-3	. TUBE,ENGINE BREATHER.	1	1
- 50	106200H10-60	◻ HOSE,VACUUM PUMP TO FIREWALL /RH/	2	1
- 52	96-970002-67	. TUBE,OIL SEPARATOR DRAIN.	2	1
		/ATTACHING PARTS/		
	A8	. CLAMP	4	
		----*----		
- 54	96-970001-33	. TUBE,CROSS TO BOOT LH	1	1
	96-970001-19	. TUBE,CROSS TO BOOT RH	1	1
- 55	MS35489-6	. GROMMET	4	1
- 56	11005-6	. GROMMET	2	1
- 57	96-980002-1	. PANEL INSTL,NACELLE LH.	1	1
	96-920002-2	. PANEL INSTL,NACELLE RH.	1	1
- 58	96-970001-53	. TUBE,NACELLE TO FUSELAGE LH	1	1
	96-970001-54	. TUBE,NACELLE TO FUSELAGE RH	1	1
- 59	MS35489-17	. GROMMET,FUSELAGE STA 85.25.	2	1
- 60	115005-1	. GROMMET,FUSELAGE STA 58.50.	2	1
- 61	95-970000-33	. HOSE,CROSS TO NACELLE LH.	1	1
	95-970000-17	. HOSE,CROSS TO NACELLE RH.	1	1
		/ATTACHING PARTS/		
	AN737RM26	. CLAMP	2	
		----*----		
- 62	AN918-2D	. CROSS,DEICER FWD.	1	1
- 63	96-970001-47	. TUBE,DEICER /INSTRUMENT PANEL TO FWD CROSS/ .	1	1
- 63A	96-970001-11	. TUBE,DEICER /FWD CROSS TO AFT CROSS/.	1	1
- 64	AN918-3D	. CROSS,DEICER AFT.	1	1
	AN912-2D	. BUSHING,AFT CROSS	1	1
	AN840-6D	. ADAPTER,AFT CROSS	1	1
	AN842-6D	. ELBOW,AFT CROSS	1	1
- 65	96-970001-7	. TUBE,HORIZONTAL STABILIZER LH	1	1
	96-970001-5	. TUBE,HORIZONTAL STABILIZER RH	1	1
	MS35489-18	. GROMMET,VERTICAL STABILIZER	1	1
- 66	96-970001-9	. HOSE,DEICER /VERTICAL STABILIZER/	1	1
- 67	23S2004-5-1	. BOOT,HORIZONTAL STABILIZER LH	1	1
	23S2004-5-2	. BOOT,HORIZONTAL STABILIZER RH	1	1
- 69	106200FR10-72	. HOSE,VACUUM PUMP TO OIL SEPARATOR	2	1
- 70	35-380052	. KNOB,INSTRUMENT PANEL	1	1
- 71	35-380053-5	. SWITCH,INSTRUMENT PANEL	1	1
- 72	96-324034-23	. PANEL,INSTRUMENT /USED WITH ALTERNATORS/. . .	1	1
	96-324062-25	. PANEL,INSTRUMENT /USED WITH GENERATORS/ . . .	1	1
- 73	50-380048-1	. RELAY,DEICER.	1	1
		/ATTACHING PARTS/		
	AN515-4-4	. SCREW	1	
	AN960-4L	. WASHER.	1	
	MS20365-440	. NUT	1	
		----*----		

FIG. & INDEX NO.	PART NO.	DESCRIPTION 1 2 3 4 5 6 7	UNITS PER ASSY	USABLE ON CODE
69 - 74		. DELETED		
- 75	96-970012	. PLACARD,SURFACE DEICER.	1	1
- 76	50-380016-13	. GAGE,SURFACE DEICER	1	1
- 77	23S2004-6-1	. BOOT,VERTICAL STABILIZER.	1	1
- 78	ET4738	. RELAY,SURFACE DEICER.	1	1
		/ATTACHING PARTS/		
	AN515-4-4	. SCREW	2	
	AN960-4L	. WASHER.	2	
	MS20365-440	. NUT	2	
		----*----		
- 79	7274-2-5	. CIRCUIT BREAKER,SURFACE DEICER.	1	1

CODE EFFECTIVITY

1 TD-534 THRU TD-707

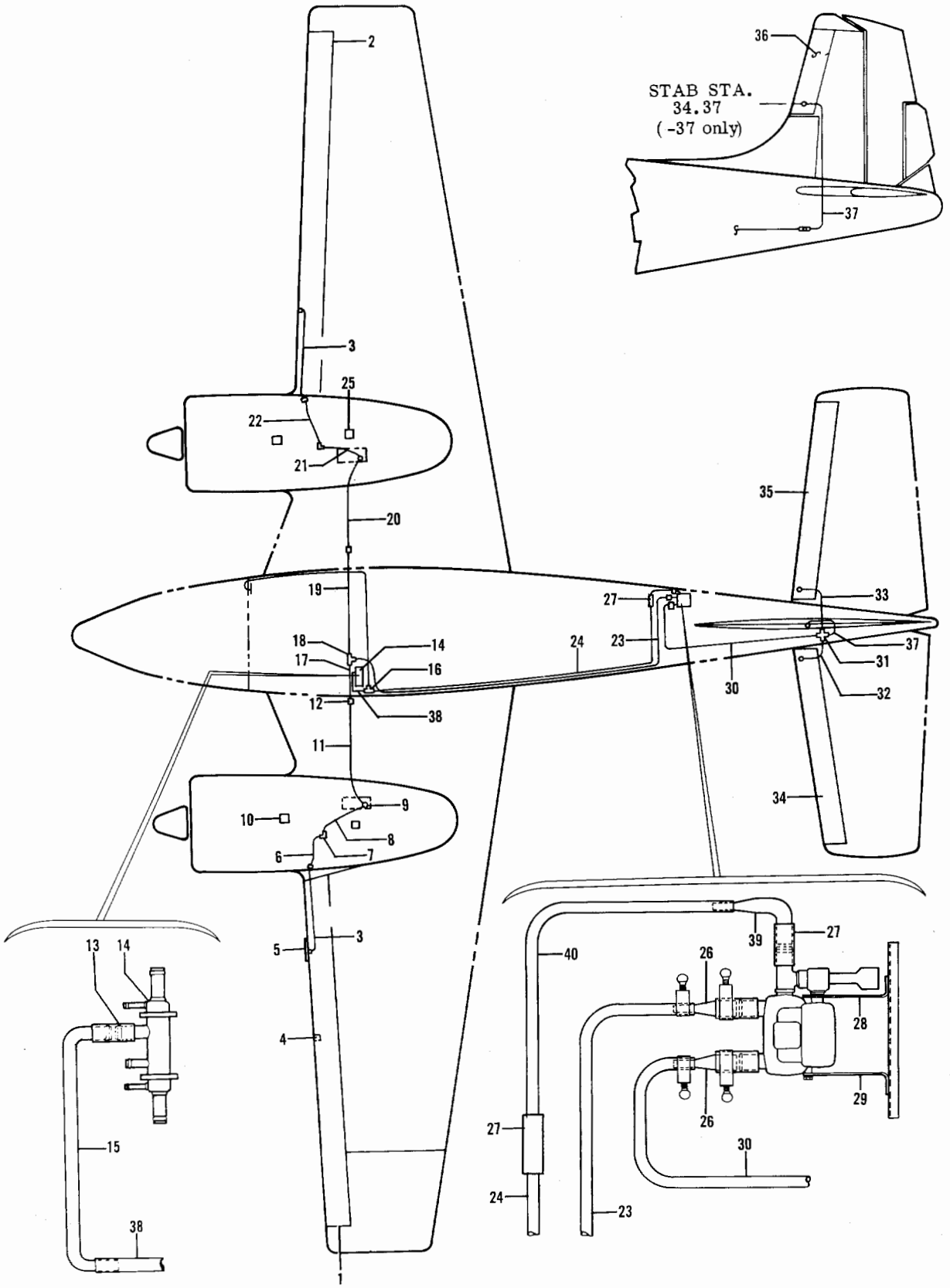

Figure 70. Deicer System (TD-708 and After)

FIG. & INDEX NO.	PART NO.	DESCRIPTION 1 2 3 4 5 6 7	UNITS PER ASSY	USABLE ON CODE
70	96-970004-37	DEICER INSTL,SURFACE.	NP	1
- 1	¤23S2004-13-1	. BOOT,LH WING.	1	1
- 2	¤23S2004-10-2	. BOOT,RH WING.	1	1
- 3	95-970000-149	. HOSE.	1	
		/ATTACHING PARTS/		
	¤AN737RM24	. CLAMP	1	
		----*----		
- 4	168-3	. WING DETECTOR UNIT.	1	1
- 5	130411-0090	. STALL STRIP	1	1
- 6	96-970001-61	. TUBE.	1	1
- 7	¤AN821-6D	. ELBOW	1	1
- 8	96-970001-33	. TUBE.	1	
- 9	¤AN815-6D	. UNION	1	1
- 10	423CC	. PUMP.	1	1
	1K1-8-12	. . FITTING	2	
- 11	¤96-970001-53	. TUBE.	1	1
- 12	MS35489-6	. GROMMET	1	
- 13	106200H10-8	. HOSE.	5	1
- 14	38E63-1A	. VALVE	1	1
		/ATTACHING PARTS/		
	¤AN501A10-6	. SCREW	4	
		----*----		
- 15	96-970004-3	. ELBOW	1	1
- 16	96-970004-5	. TEE ASSY.	1	1
- 17	96-970004-11	. TUBE.	1	1
- 18	96-970004-29	. TEE ASSY.	1	1
- 19	96-970004-13	. TUBE.	1	1
- 20	96-970001-54	. TUBE.	1	1
- 21	96-970001-19	. TUBE.	1	1
- 22	96-970001-21	. TUBE.	1	1
- 23	96-970004-15	. TUBE.	1	
		/ATTACHING PARTS/		
	¤AN737RM24	. CLAMP	1	
		----*----		
- 24	96-970004-17	. TUBE.	1	1
- 25	1H22-1	. VALVE,PRESSURE RELIEF	1	1
		/ATTACHING PARTS/		
	¤AN3-4A/M/	. BOLT.	2	1
	MS20365-1032	. NUT	2	1
		----*----		
	106200H10-10	. . HOSE.	1	1
- 26	50-970101-115	. REDUCER	2	1
		/ATTACHING PARTS/		
	¤AN737RM26	. CLAMP	1	
		----*----		
- 27	106200H12-8	. HOSE.	4	1
		/ATTACHING PARTS/		
	¤AN737RM24	. CLAMP	4	
		----*----		
- 28	96-970004-2	. BRACKET	1	1
- 29	96-970004-1	. BRACKET	1	
- 30	96-970004-19	. TUBE.	1	
		/ATTACHING PARTS/		
	96-970001-51	. BRACKET	1	
	¤NAS68-A06	. NUTPLATE /SUPERSEDES AN366F632/	2	
		----*----		
- 31	50-970101-91	. MANIFOLD.	1	1
		/ATTACHING PARTS/		
	AN737RM26	. CLAMP	4	
	MS35489-17	. GROMMET	2	
		----*----		
- 32	96-970001-7	. TUBE.	1	1
- 33	96-970001-5	. TUBE.	1	1
- 34	¤23S2004-5-1	. BOOT,LH HORIZONTAL STABILIZER	1	1
- 35	¤23S2004-5-2	. BOOT,RH HORIZONTAL STABILIZER	1	
- 36	¤23S2004-6-1	. BOOT,VERTICAL STABILIZER.	1	
- 37	96-970001-9	. HOSE.	1	1
		/ATTACHING PARTS/		
	¤A6	. CLAMP	2	
		----*----		

FIG. & INDEX NO.	PART NO.	DESCRIPTION 1 2 3 4 5 6 7	UNITS PER ASSY	USABLE ON CODE
70 - 38	96-970004-9	. TUBE.	1	1
- 39	96-970004-7	. ELBOW	1	1
- 40	96-970004-21	. TUBE.	1	1
		/ATTACHING PARTS/		
	¤AN737RM24	. CLAMP	1	
		----*----		

CODE EFFECTIVITY

1 TD-708 AND AFTER

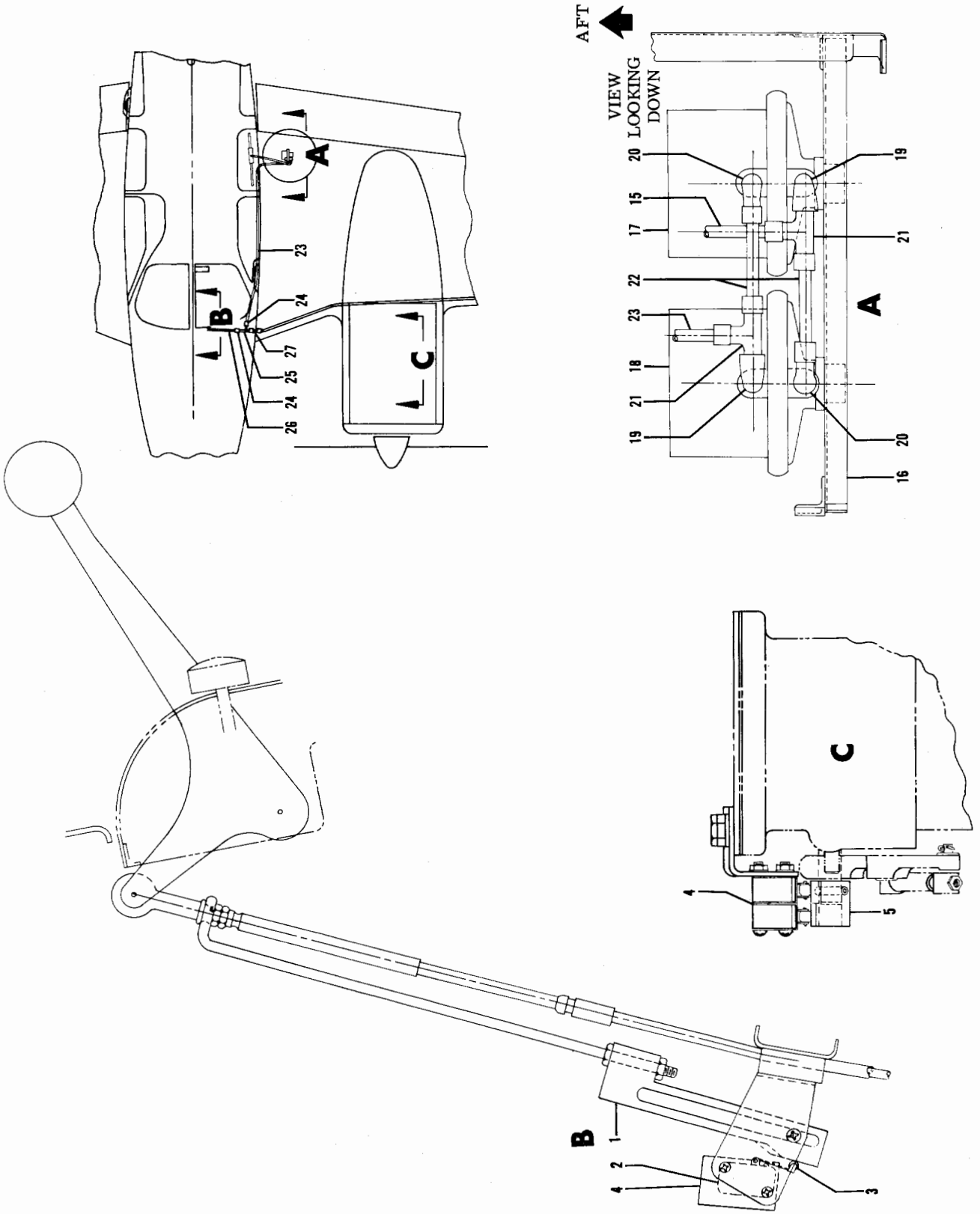

Figure 71. Landing Gear Safety System
(Sheet 1 of 2 Sheets)

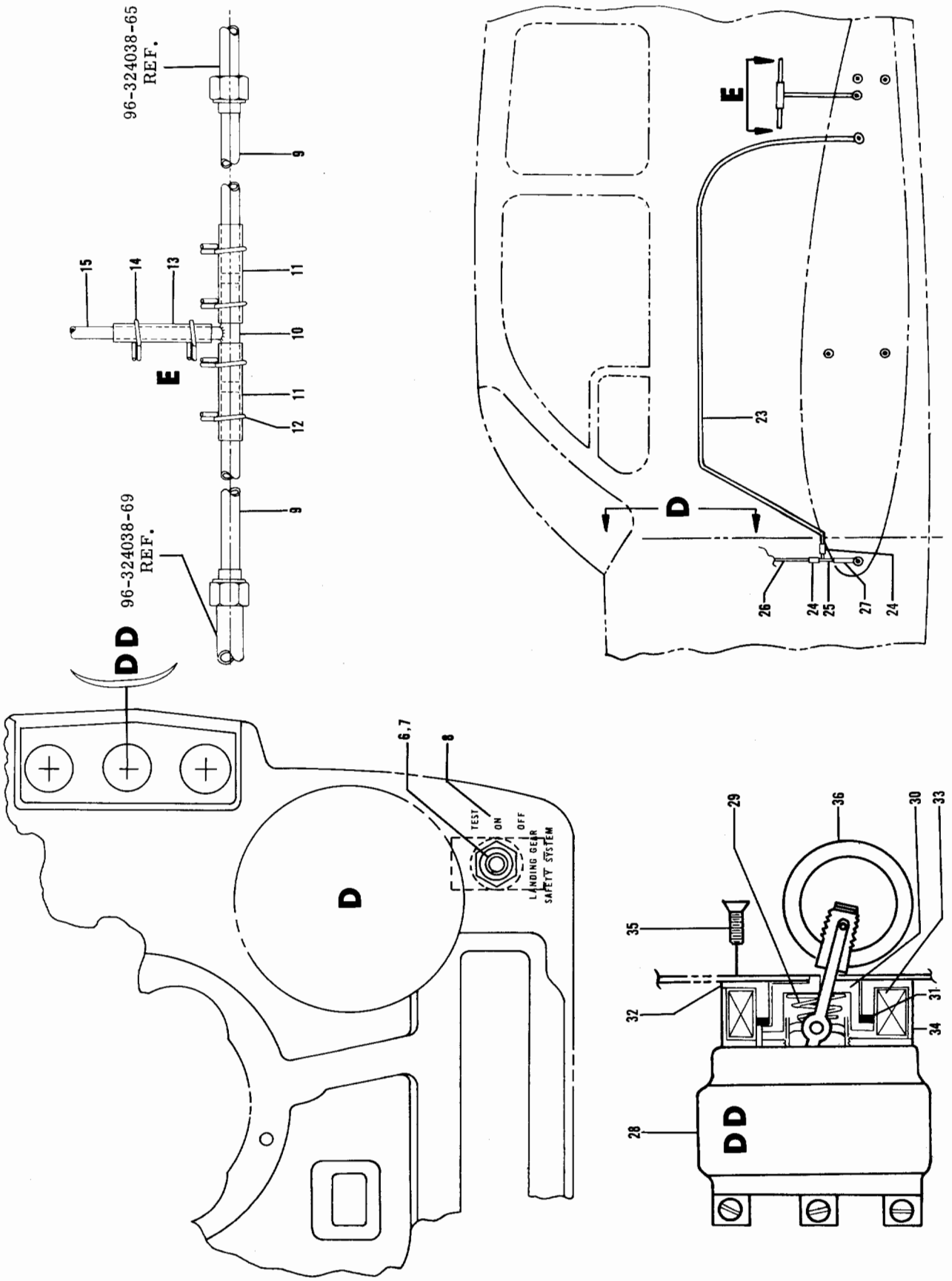

Figure 71. Landing Gear Safety System
(Sheet 2 of 2 Sheets)

FIG. & INDEX NO.	PART NO.	DESCRIPTION 1 2 3 4 5 6 7	UNITS PER ASSY	USABLE ON CODE
71	96-810022-1	SAFETY SYSTEM INSTL,LANDING GEAR.	NP	1
- 1	96-810022-43	. CAM,LH.	1	1
	96-810022-44	. CAM,RH.	1	1
- 2	AN3234-2	. SWITCH.	2	1
- 3	JV20	. ACTUATOR.	2	1
		/ATTACHING PARTS/		
	AN515-4R18	. SCREW	2	
	AN960-4	. WASHER.	2	
	MS20365-440	. NUT	2	
		----*----		
- 4	50-364108	. INSULATOR	2	1
- 5	96-810022-37	. CAM	2	1
		/ATTACHING PARTS/		
	NAS561P4-10	. PIN	1	
		----*----		
- 6	35-380053-11	. SWITCH.	1	1
		/ATTACHING PARTS/		
	15-124	. FACENUT	1	
		----*----		
- 7	35-380052	. KNOB.	1	1
- 8	96-324105	. PLACARD,LANDING GEAR SAFETY SYSTEM.	1	1
	96-810022-31	. TUBE ASSY	1	1
- 9	96-810022-33	. . TUBE ASSY	2	1
- 10	96-810022-11	. . TEE ASSY.	1	1
- 11	96-810022-29	. . TUBE,SPLICE	2	1
- 12	A8	. . CLAMP,HOSE.	4	1
- 13	96-810022-27	. TUBE,SPLICE	1	1
- 14	A6	. CLAMP,HOSE.	2	1
- 15	96-810022-25	. TUBE /STATIC SYSTEM TO PRESSURE SWITCH/ . . .	1	1
- 16	96-810022-39	. SUPPORT,PRESSURE SWITCH	1	1
	96-810022-41	. ANGLE,SUPPORT	2	1
- 17	35-380092-25	. SWITCH,PRESSURE /STATIC SYSTEM/	1	1
- 18	35-380092-11	. SWITCH,PRESSURE /PITOT SYSTEM/.	1	
- 19	AN914-1D	. ELBOW	2	1
- 20	269P1/4-1/8	. ELBOW	2	1
- 21	271P1/4-1/8	. TEE	2	1
- 22	96-810022-17	. TUBE.	2	1
- 23	96-81002--21	. TUBE /PITOT SYSTEM TO PRESSURE SWITCH/. . . .	1	1
- 24	96-810022-27	. TUBE,SPLICE	2	
		/ATTACHING PARTS/		
	A6	. CLAMP,HOSE.	4	
		----*----		
- 25	96-810022-5	. TEE ASSY.	1	1
- 26	96-810022-45	. TUBE ASSY /TO AIRSPEED INDICATOR HOSE/. . . .	1	1
- 27	114693-2-00900	. TUBING /TO PITOT LINE/.	1	1
		/ATTACHING PARTS/		
	A6	. CLAMP,HOSE.	2	
		----*----		
	60-364011	SWITCH ASSY,LANDING GEAR SAFETY	1	1
- 28	60-364011-15	. SWITCH.	1	1
- 29	35-364171-3	. SPRING.	1	1
- 30	60-364011-1	. LATCH,SOLENOID.	1	1
- 31	105090D030-9F	. WASHER.	1	1
- 32	60-364011-13	. CAP ASSY.	1	1
	60-364011-3	. . CAP	1	1
	60-364011-17	. . BEARING ASSY,SLEEVE	1	1
- 33	35-380090	. COIL ASSY	1	1
- 34	60-364011-11	. HOUSING ASSY.	1	1
	60-364011-9	. . HOUSING	1	1
	MS9048-065	. . PIN,ROLL.	1	1
- 35	AN507-4R4	. SCREW	2	1

FIG. & INDEX NO.	PART NO.	DESCRIPTION 1 2 3 4 5 6 7	UNITS PER ASSY	USABLE ON CODE
71 - 36	35-380087-1	LEVER,LANDING GEAR SWITCH . . . . . /ATTACHING PARTS/	1	1
	AN565D8H2	SCREW,SET	1	

CODE EFFECTIVITY

1 TD-534 AND AFTER

PART NUMBER	FIGURE & INDEX NO.	QTY. PER ART.
.44W	14D- 10	AR
#576 PRESSTITE	11C	
A-101-22	47B- 3	2
A-101-353	47A- 12	1
A-102-15	47B- 1	4
A-102-29	47A- 5	1
A-104-188	47A- 7	1
A-110-99	47A- 2	1
A-117-133	47A- 3	1
A-129-48	47A- 10	1
A-1303A	49K- 21	4
A-1305	49K- 15	AR
A-1306	49K- 11	8
A-1308	49K- 24	4
A-1328	49K- 27	8
A-1331	49K- 20	8
A-1333	49K- 26	4
A-134-9	47A- 4	1
A-1464	49K- 38	4
A-150-126	47A- 11	1
A-164-454	47A- 8	1
A-1784-6Z-1	14	3
A-194-35	47A- 1	1
A-22	46 - 48	2
A-22	47B-	2
A-282	49K- 9	4
A-285	49K- 12	4
A-304	49K- 13	4
A-35A71	48C- 6	1
A-53T	46 - 23	1
A-53T	47A-	1
A-57G-102	47 - 14	4
A-57G-103	47 - 15	4
A-57G-104	47 - 19	4
A-57G-105	47 - 1	4
A-57G-107	47 - 5	8
A-57G-109	47 - 10	4
A-57G-111	47 - 17	4
A-57G-113	47 - 16	4
A-57G-118	47 - 7	4
A-6077-6Z-1	14	6
A-65	49K- 6	4
A-6983-335	10 - 2	1
A-856	49K- 48	2
A-857	49K- 49	2
A-858	49K- 50	4
A-859	49K- 45	4
A-860-1	49K- 54	2
A-861-3	49K- 36	4
A-862	49K- 35	2
A-863	49K- 41	2
A-872	49K- 37	4
A-872-012-1	14	6
A-880-2	49K- 44	2
A-881	49K- 17	4
A-883	49K- 32	2
A-884	49K- 33	2
A-8970-1-327	61A- 35	27
A-8970-2-327	61A- 37	4
A-8975-1-327	61A- 36	2
A-899	49K- 46	4
A-944	49K- 19	4
AA36A47	48C- 7	1
AC/-20	49 - 86	2
¤AC/-30	49	2
AD475	53 - 7	2
AF5	7	1
AF940-416	57 - 14	2
¤AGX3	63 - 64	2
AN/ASA-3	20 - 16	4
¤AN/ASA-3	29 - 18	2
AN/ASA-3	26	3
AN122697	57 - 25	2
AN155-32L	31 - 29	4
AN155-32L	31 - 90	4
AN155-32L	32 - 12	2
AN155-32L	33 - 14	2
AN155-8L	31 - 80	4
AN155-8L	32 - 17	2
AN155-8S	32 - 18	2
AN161-16RS	36 - 89	1
AN161-16RS	36A- 90	1
¤AN161-16RS	37 - 71	1
AN173-16A	58 - 65	2
AN173-16A	58 - 86	1
AN173-16A	58A	1
AN173-16A	58A	1
AN173-5	20 - 12	1
AN173-5	20 - 13	2
AN173C5	27 - 41	5
AN173C5	28 - 28A	1
¤AN173C5/M/	29 - 17	2
AN174-15/M/	34 - 7	1
¤AN174-24A/M/	44 - 27	1
¤AN174-34/M/	44 - 40	1
AN175-14A	42 - 34	1
¤AN1793-6Z3	64	3
AN200KP4	34 - 3	1
AN200KS4	26 - 8	2
AN200K3L	59 - 2	6
¤AN200K3L	59 - 5	2
AN200K3L	59 - 17	2
AN200K3L	59 - 22	6
AN201KP3A	27 - 24	2
¤AN201KP3A	28 - 13	1
¤AN201KP3A	34 - 34	2
AN201KP4A	34 - 10	1
AN201KP6A	27 - 36	2
¤AN201KP6A	28 - 24	2
AN201KP6A	31 - 58	2
AN201K4A	35 - 8	4
AN210-1A	16 - 27	1
AN210-4B	58 -101	1
AN22-7A	31 - 5B	2
AN220	49C	14
AN221-9	21 - 4	2
AN227-6	14 - 8	20
AN227-6	14 - 31	14
AN227-6	14 - 42	8
AN227-6	14A- 76	20
AN227-6	14A- 79	14
¤AN227-6B	13D- 58	10
¤AN227-6B	13E- 38	10
¤AN227-6B	14C	34
¤AN227-6B	64	2
¤AN227-6B	64A- 79	2
AN227-6P	12A- 40	1
AN227-7	14	20
AN227-7	14	14
AN227-7	14	8
AN227-7	14A- 77	20
AN227-7	14A- 80	14
AN227-7B	12A- 39	1
¤AN227-7B	13D	10
¤AN227-7B	13E	10
¤AN227-7B	14C	34
¤AN227-7B	64 - 52	2
¤AN227-7B	64A	2
AN227-8	14	10
AN227-8B	12A- 36	1
¤AN227-8B	13D	10
¤AN227-8B	13E	10
AN227-8B	14D	6
AN227-9	14	10
¤AN227-9B	13D	10
¤AN227-9B	13E	10
AN23-10	38 - 37	4
AN23-14	27 - 8	2
AN23-14	27 - 13	2
AN23-14	28 - 37	2
AN23-14	35 - 1	1
AN23-15A	54 - 8	6
AN23-17A	39 - 2	1
AN23-26A	16 - 5	5
AN23-27A	16	3
¤AN23-8A/M/	60	3
AN23-9A	32 - 16	6
AN23-9A/M/	29 - 4	8
AN24-12	31 - 86	4
AN24-14	38 - 29	3
AN24-14	59 - 13	1
AN24-14/M/	38 - 35	2
AN24-24/M/	34 - 8	1
¤AN24-25/M/	44 - 12	1
AN24-28A	13B- 2	4
AN24-32	38 - 44	2
AN240-3	25 - 13	3
AN25-22	42 - 10	1
AN253-1-1250	15 - 22	1
AN253-1-800	15 - 29	1
¤AN253-2-375	47C- 8	1
AN253-2-513	15 - 3	3
AN253-2-513	15 - 8	1
¤AN253-2-513	61C	1
AN253-2-525	53	2
¤AN2552A3A	63 -105	1
AN26-23	38 - 4	2
AN26-28	42 - 1	1
AN26-31/M/	34 - 13	4
AN270B8	57 - 75	4
AN270B8	57B- 22	2
AN271B6	58 - 43	1
¤AN280H404	60 - 15	1
¤AN286-1	38 - 23B	2
AN3	12A- 9	2
AN3	13A- 4	4
AN3	13A- 7	4
AN3	13A- 11	2
AN3	13A- 29	4
AN3	13B- 10	2
AN3	49 - 14	4
AN3	49 -111	8
AN3	49A	2
AN3	49C	2
AN3	51 - 11	24
AN3	52 - 17	4
AN3	52A- 5	4
AN3	52A- 7	4
AN3	52A- 9	2
AN3	52A- 13	2
AN3	53 - 8	16
AN3	53	4
AN3	53	4
AN3	54 - 24	4
AN3	54 - 27	2
AN3	54 - 37	2
AN3	56 - 9	4
AN3	58	2
AN3-	48A	6
AN3-10	35 - 15	4
AN3-10	46	4
AN3-10A	13 - 11	1
AN3-10A	14 - 62	2
AN3-10A	20	1
AN3-10A	34 - 16	1
AN3-10A	34 - 23	1
¤AN3-10A/M/	24 - 17	2
¤AN3-10A/M/	40 - 2	2
¤AN3-10A/M/	40 - 11	4
AN3-11	35 - 11	4
AN3-11	35 - 23	1
AN3-11	35 - 31	1
AN3-11	54 - 10	2
¤AN3-11/M/	37 - 86	1
AN3-11A	22 - 2	4
AN3-11A	22A- 2	4
AN3-11A	33 - 21	1
AN3-11A	48	2
¤AN3-11A/M/	48A	2
¤AN3-12/M/	49C	12
AN3-12A	22 - 1	4
AN3-12A	22A- 1	4
AN3-12A	31 - 17	1
AN3-12A	31 - 20	1
AN3-12A	58 - 12	3
AN3-13A	32 - 20	2
¤AN3-13A/M/	13C	3
AN3-14A	35 - 34	2
AN3-14A	35 - 42	1
AN3-14A	35 - 46	2
¤AN3-14A/M/	13C	1
¤AN3-14A/M/	13D- 12	2
¤AN3-14A/M/	13D- 23	8
¤AN3-14A/M/	13D- 25	4
¤AN3-14A/M/	13E- 12	6
¤AN3-14A/M/	13E- 16	8
AN3-15A	30 - 2	3
¤AN3-15A/M/	40 - 1	2
AN3-16A	58 -105	1
AN3-17A	58 - 89	1
¤AN3-17A/M/	58A	1
AN3-21	48 - 9	5
AN3-21	48A- 9	5
AN3-24	58 - 55	1
¤AN3-24A/M/	58A	1
AN3-26	59 - 12	2
AN3-27A	16 - 2	1
AN3-3A	27 - 21	4
AN3-3A	28 - 10	2
AN3-3A	69	4
¤AN3-3A/M/	11B- 6	2
AN3-30	52 - 2	2
AN3-35A	34 - 33	1
AN3-4	58 -117	2
AN3-4	61	2
AN3-4	61A- 23	2
¤AN3-4/M/	49 - 4	2
¤AN3-4/M/	49 - 6	6
¤AN3-4/M/	49C	4
¤AN3-4/M/	61B- 49	2
AN3-4A	16 - 24	2
AN3-4A	46	2
AN3-4A	48	8
AN3-4A	58 - 77	2
AN3-4A	58 - 99	2
AN3-4A	58 -108	2
¤AN3-4A/M/	48A	8
¤AN3-4A/M/	70	4
AN3-44A	35 - 17	2
AN3-5	53 - 27	3
AN3-5	58	1
AN3-5A	10 - 6	24
AN3-5A	13 - 19	2
AN3-5A	31 - 53	2
AN3-5A	35 - 10	4
AN3-5A	35 - 50	4
AN3-5A	36 - 83	1
AN3-5A	36A- 84	1
AN3-5A	38 - 47	4
AN3-5A	59	2
¤AN3-5A/M/	24 - 15	2
AN3-5A/M/	28 - 18	2
¤AN3-5A/M/	58A	2
AN3-5A/M/	68	6
AN3-6	10 - 31	1
AN3-6A	10 - 47	1
AN3-6A	13 - 8	2
AN3-6A	13 - 20	2
AN3-6A	16 - 9	1
AN3-6A	16 - 11	1
AN3-6A	16 - 28	1
AN3-6A	27 - 29	4
AN3-6A	31 - 23	2
AN3-6A	31 - 74	1
AN3-6A	31 - 82	2
AN3-6A	31 - 92	2
AN3-6A	31 - 95	2
AN3-6A	34 - 32	2
AN3-6A	41 - 52	1
AN3-6A	45 - 3	4
¤AN3-6A/M/	8 - 20	3
¤AN3-6A/M/	41A- 32	1
AN3-7	34 - 22	1
AN3-7A	14 - 63	2
AN3-7A	21 - 1	2
AN3-7A	21A- 1	4
AN3-7A	31 - 73	1
AN3-7A	58 - 46	1
AN3-7A	58 - 81	1
AN3-7A/M/	20 - 1	2
¤AN3-7A/M/	58A	1
¤AN3-7A/M/	63 -106	2
¤AN3-7A/M/	64A	6
¤AN3-7A/M/	64A	4
AN3-8A	18 - 34	6
AN3A	12B- 6	2
AN3A	12C- 15	8
AN3A	12C- 18	8
AN3A	41A- 69	3
AN3A	52 - 9	2
AN3A	54	1
AN3A	58A	2
AN3A	64	4
AN3A	67	1
¤AN3A6/M/	8 - 17	3
AN3H31A	57I- 4	2
¤AN3021-10	63 - 31E	2
AN3022-1	58 -160	1
AN3022-3	61	3
¤AN3022-3	61A- 30	1
¤AN3022-3	61B- 56	1
¤AN3027-3	61B- 38	2
¤AN3057-3	63 - 11B	1
AN3066-4	23 - 11	4
AN3066-4	25 - 22	4
AN310-3	20	1
AN310-3	20	2
AN310-3	27	2
AN310-3	28	1
¤AN310-3	29	2
AN310-3	31	1
AN310-3	35	4
AN310-3	35	4
AN310-3	35	1
AN310-3	35	1
AN310-3	36 - 88	1
AN310-3	36A- 89	1
¤AN310-3	37 - 70	1
AN310-3	38	2
AN310-3	38	4

PART NUMBER	FIGURE & INDEX NO.	QTY. PER ART.	PART NUMBER	FIGURE & INDEX NO.	QTY. PER ART.	PART NUMBER	FIGURE & INDEX NO.	QTY. PER ART.
AN310-3	46	4	¤AN340-4	63	4	AN365-1032	54	4
¤AN310-3	49	2	AN340-8	48B- 5	2	AN365-1032	56	4
¤AN310-3	49	6	AN340-8	48B- 8	2	AN365-1032	56	2
¤AN310-3	49	8	AN340-8	48B	2	AN365-1032	57A	2
¤AN310-3	49A	2	AN340-8	48B	4	AN365-1032	58	3
¤AN310-3	49C	12	AN340-8	48B- 19	1	AN365-1032	58	1
¤AN310-3	49C	4	AN340-8	48B	2	AN365-1032	58	1
¤AN310-3	49C	2	AN340-8	53	2	AN365-1032	58	1
AN310-3	52	4	AN340B8	11B	3	AN365-1032	58	1
AN310-3	52A	4	¤AN340C516	49C	16	AN365-1032	58	1
AN310-3	54	2	AN340D516	49C	16	AN365-1032	58	2
AN310-3	54	2	¤AN341-10	61B- 13	4	AN365-1032	58	1
AN310-3	54	2	¤AN341-6	63	20	AN365-1032	58	2
AN310-3	54	2	AN3432-6-12	63	20	AN365-1032	58	1
AN310-3	58	2	AN3435-2-10	63 - 78	2	AN365-1032	58	2
AN310-3	59	6	AN3437-1-11	63	2	AN365-1032	58	2
AN310-3	59	2	AN345-10	48 - 43	1	AN365-1032	59	2
AN310-3	61	2	¤AN345-10	48A- 43	1	AN365-1032	65	1
AN310-3	61A	2	¤AN345-10	48A	3	AN365-416	13B	4
¤AN310-3	61B	2	¤AN345-10	58A	2	AN365-416	13B	6
AN310-4	31	2	¤AN345-10	58A	2	AN365-420	39	4
AN310-4	34	1	AN345C10	64A	1	AN365-428	12B	2
AN310-4	34	1	AN360-4	49	4	AN365-428	13	3
AN310-4	35	2	AN360-4	49C	2	AN365-428	16	1
AN310-4	38	2	AN363-1032	37G- 8	2	AN365-428	20	1
AN310-4	38	2	AN363-428	57	4	AN365-428	21	1
AN310-4	41	1	AN363-524	37B- 2	6	AN365-428	21A	2
¤AN310-4	41A	1	AN363-624	37G- 24	4	AN365-428	22	2
¤AN310-4	44	1	AN363-720HT	49K- 10	4	AN365-428	22A	2
¤AN310-4	44	1	AN364-1032	12	1	AN365-428	26	4
AN310-4	54	2	AN364-1032	13	1	AN365-428	27	28
AN310-4	57 - 13	2	AN364-1032	35	4	AN365-428	28	12
AN310-4	59	3	AN364-1032	42	2	AN365-428	31	1
AN310-5	36	2	AN364-1032	54	6	AN365-428	31	1
AN310-5	36A	2	AN364-1032	58	4	AN365-428	31	2
¤AN310-5	37	2	AN364-1032	58	1	AN365-428	31	1
AN310-5	38	2	AN364-1032	58	1	AN365-428	31	1
AN310-5	39	1	AN364-42B	12	8	AN365-428	32	1
AN310-5	39 - 43	1	AN364-428	12	2	AN365-428	32	1
¤AN310-5	44	1	AN364-428	12	4	AN365-428	32	1
AN310-5	49D	1	AN364-428	23	4	AN365-428	32	1
AN310-6	34	3	AN364-428	31	1	AN365-428	33	2
AN310-6	42	1	AN364-428	31	1	AN365-428	33	2
AN310-8	36	4	AN364-632	15	12	AN365-428	33	2
AN310-8	36A	4	AN364-632	20	1	AN365-428	34	4
¤AN310-8	37 - 6	4	AN364-632	30	2	AN365-428	36	2
¤AN3106B10S2S	63 - 11A	1	AN364-832	33	1	AN365-428	36	12
¤AN3106B14S7S	63	2	AN364-832	48	1	AN365-428	36	4
AN3111-2	17	1	AN364-836	31	2	AN365-428	36A	2
AN3111-2	63	1	AN365	13A	2	AN365-428	36A	12
AN315-3	53	4	AN365-1032	10	1	AN365-428	36A	4
AN315-3R	20	1	AN365-1032	10	1	AN365-428	38	2
AN315-3R	27	2	AN365-1032	10	1	AN365-428	38	2
AN315-3R	28 - 30	2	AN365-1032	10	1	AN365-428	41 - 16	1
AN315-3R	31 - 71	1	AN365-1032	10	2	AN365-428	41 - 20	1
AN315-3R	42 - 42	4	AN365-1032	12B	2	AN365-428	41	1
AN315-3R	58	2	AN365-1032	12B	24	AN365-428	41B- 5	3
AN315-4R	54	2	AN365-1032	12C	8	AN365-428	53	8
¤AN315-4R	63	3	AN365-1032	12C	8	AN365-428	54	2
¤AN315-5R	63	1	AN365-1032	13	2	AN365-428	57	4
AN316-4	47 - 2	4	AN365-1032	13	4	AN365-428	57	4
AN316-4L	31 - 43	2	AN365-1032	13B	2	AN365-428	57A	4
¤AN316-4R	8A- 12	2	AN365-1032	13B	8	AN365-428	58	1
AN316-4R	31 - 44	2	AN365-1032	14B	2	AN365-440	53	4
AN316-4R	34	2	AN365-1032	14D-107	2	AN365-440	53	4
AN316-4R	34	2	AN365-1032	16	1	AN365-440	53A	2
¤AN316-4R	40	4	AN365-1032	16	8	AN365-440	53A	4
¤AN316-4R	44 - 15	2	AN365-1032	16	1	AN365-440	58	2
AN316-4R	52A	4	AN365-1032	16	1	AN365-440	58	2
AN316-4R	52A	2	AN365-1032	16	2	AN365-440	58	6
AN316-4R	54	6	AN365-1032	16	1	AN365-524	36 - 37	2
AN316-4R	54	2	AN365-1032	16	1	AN365-524	36A	2
AN316-4R	54	2	AN365-1032	16A	9	AN365-524	42	1
AN316-4R	54	2	AN365-1032	20	2	AN365-624	16	1
AN316-4R	54	2	AN365-1032	21	2	AN365-624	16	1
¤AN316-4R	61C	4	AN365-1032	21A	4	AN365-624	16	1
¤AN316-4R	63	1	AN365-1032	22	8	AN365-624	38	2
AN316-416	63	1	AN365-1032	22A	4	AN365-624	38	2
AN316-5R	31 - 49	2	AN365-1032	23	4	AN365-624	41	2
¤AN316-5R	63	1	AN365-1032	23	1	AN365-624	41A	1
AN316-6R	34	10	AN365-1032	30	3	AN365-624	42	2
AN316-6R	35	1	AN365-1032	31	1	AN365-632	10	2
AN316-6R	38	2	AN365-1032	31	1	AN365-632	10	46
AN316-6R	42 - 4	1	AN365-1032	31	2	AN365-632	10	1
AN316-6R	42 - 22	1	AN365-1032	31	2	AN365-632	14	3
¤AN316-6R	44 - 49	1	AN365-1032	31	1	AN365-632	14A	3
AN316-7	13A	2	AN365-1032	31	2	AN365-632	22A	4
AN316-7L	42 - 7	1	AN365-1032	31	2	AN365-632	26	2
AN3169	48 - 38	1	AN365-1032	31	2	AN365-632	31	2
¤AN3169-1	48A- 38	1	AN365-1032	32	2	AN365-632	36	2
AN320-3	27	2	AN365-1032	33	1	AN365-632	36A	2
AN320-3	27	2	AN365-1032	34	1	AN365-632	46	1
AN320-3	28	1	AN365-1032	34	4	AN365-632	48	2
AN320-3	28	2	AN365-1032	34	2	AN365-632	53	4
AN320-3	31	2	AN365-1032	34	3	AN365-632	53	4
AN320-3	35	1	AN365-1032	34	2	AN365-632	54	4
AN320-3	53	4	AN365-1032	35	1	AN365-632	58	2
AN320-4	31	2	AN365-1032	35	8	AN365-632	58 - 61	1
AN320-4	31	4	AN365-1032	35	1	AN365-632	58	2
AN320-4	38	2	AN365-1032	35	2	AN365-632	58	4
AN320-4	38	2	AN365-1032	36	1	AN365-632	58	2
¤AN320-4	44	1	AN365-1032	36A	1	AN365-832	10	3
¤AN320-4	47C- 45	1	AN365-1032	38	4	AN365-832	10	2
AN320-4	59	1	AN365-1032	39	1	AN365-832	14	1
AN320-5	31	6	AN365-1032	41	1	AN365-832	14	12
AN320-5	42	2	AN365-1032	45	4	AN365-832	18	62
AN320-5	42	1	AN365-1032	46	2	AN365-832	18	44
AN320-5/M/	38	2	AN365-1032	46	1	AN365-832	18	4
¤AN320-5/M/	44	1	AN365-1032	46	2	AN365-832	23	1
AN320-6	34	7	AN365-1032	46	1	AN365-832	30	4
AN320-6	38	2	AN365-1032	48 - 10	5	AN365-832	30	2
AN320-6	42	1	AN365-1032	48	2	AN365-832	34	1
¤AN320-7	60	1	AN365-1032	52	2	AN365-832	34	4
AN3210-1	36 - 70	1	AN365-1032	52	2	AN365-832	38	4
AN3210-1	36A- 72	1	AN365-1032	52	2	AN365-832	42	2
AN3210-1	37 - 74	1	AN365-1032	52A	2	AN365-832	46	2
¤AN3210-1	63 - 40	4	AN365-1032	53	16	AN365-832	46	1
¤AN3210-1	63	3	AN365-1032	54	2	AN365-832	46	4
AN3234-2	58 -157	2	AN365-1032	54	1	AN365-832	48	6
AN3234-2	71 - 2	2	AN365-1032	54	4	AN365-832	48	6

PART NUMBER	FIGURE & INDEX NO.	QTY. PER ART.
AN365-832	48	6
AN365-832	48	6
AN365-832	53	24
AN365-832	53A	24
AN365-832	54	2
AN365-832	57A	2
AN365-832	58	6
AN365-832	58	1
AN365-832C	48C- 21	3
¤AN365B632A	61C	4
AN365D1032	32	6
AN365D440	48	3
AN365D832	63	1
AN365D832	63	1
AN366-632	17A	1
AN366DF428	49C	2
AN366F1032	21A	16
AN366F1032	65	2
AN366F1032	65	2
AN366F1032	66	2
AN366F1032	68	4
¤AN366F428	44	1
¤AN366F832	7	6
¤AN366F832	14C	2
¤AN366F832	17A	5
¤AN366F832	49C	2
¤AN366F832	63	2
¤AN366F832	63	4
AN380-1-1	53A	6
AN380-1-1	57B	2
AN380-1-2	8 - 34	2
AN380-1-2	48	1
AN380-2	31	2
AN380-2	56	4
AN380-2-1	13B	2
AN380-2-1	36	4
AN380-2-1	36	1
AN380-2-1	36	2
AN380-2-1	36A	2
AN380-2-1	36A	2
AN380-2-1	36A	1
AN380-2-1	36A	2
AN380-2-1	41	4
AN380-2-1	42 - 16	1
AN380-2-2	10	1
AN380-2-2	12C	4
AN380-2-2	13	3
AN380-2-2	13A	3
AN380-2-2	16	2
AN380-2-2	16	1
AN380-2-2	16	2
AN380-2-2	16	1
AN380-2-2	20	1
AN380-2-2	20	2
AN380-2-2	27	2
AN380-2-2	27	2
AN380-2-2	27	2
AN380-2-2	28	2
AN380-2-2	28	2
AN380-2-2	31	1
AN380-2-2	31	2
AN380-2-2	31	2
AN380-2-2	31	1
AN380-2-2	31	1
AN380-2-2	31	1
AN380-2-2	31	2
AN380-2-2	31	4
AN380-2-2	31	2
AN380-2-2	31	2
AN380-2-2	31	2
AN380-2-2	31	4
AN380-2-2	31	1
AN380-2-2	31	2
AN380-2-2	31	2
AN380-2-2	32	2
AN380-2-2	32	2
AN380-2-2	32	1
AN380-2-2	32	3
AN380-2-2	33	2
AN380-2-2	33	2
AN380-2-2	34	1
AN380-2-2	34	1
AN380-2-2	35	1
AN380-2-2	35	4
AN380-2-2	35	4
AN380-2-2	35	1
AN380-2-2	35	1
AN380-2-2	38	2
AN380-2-2	38	2
AN380-2-2	38	2
AN380-2-2	38	2
AN380-2-2	38	2
AN380-2-2	38	4
AN380-2-2	38	2
AN380-2-2	39	1
AN380-2-2	39	1
AN380-2-2	41	1
AN380-2-2	42	1
AN380-2-2	42	1
AN380-2-2	42 - 23	1
AN380-2-2	42	1
AN380-2-2	46	4
AN380-2-2	48	1
AN380-2-2	49D	1
AN380-2-2	52	4
AN380-2-2	52A	4
AN380-2-2	54	2
AN380-2-2	54	2
AN380-2-2	54	2
AN380-2-2	54	2
AN380-2-2	57	2
AN380-2-2	58	1
AN380-2-2	59	1
AN380-2-3	31	1
AN380-2-3	31	4
AN380-2-3	34	6
AN380-2-3	35	2
AN380-2-3	36	2
AN380-2-3	36A	2
¤AN380-2-3	37	2

PART NUMBER	FIGURE & INDEX NO.	QTY. PER ART.
AN380-2-3	42	1
¤AN380-2-3	48A	2
AN380-2-3	54	2
AN380-2-3	58	2
¤AN380-2-3	58A	1
AN380-2-3	59	2
AN380-2-3	61	2
AN380-2-3	61A	2
¤AN380-2-3	61B	2
AN380-3-2	38	1
AN380-3-2	49K	8
AN380-3-2	49K	4
AN380-3-3	12C	2
AN380-3-3	13B	2
¤AN380-3-3	13C	2
¤AN380-3-3	13C	2
¤AN380-3-3	13C- 44	2
AN380-3-3	36	4
AN380-3-3	36A	4
¤AN380-3-3	37	4
AN380-3-3	49K	4
AN380-3-3	49K	2
AN380-3-3	58	1
¤AN380-3-3	58A	1
AN380-3-4	39	1
¤AN380-3-4	60	1
AN380-4-7	41	1
¤AN380-4-7	41A	1
AN380-4-8	36	2
AN380-4-8	36A	2
¤AN380-4-8	37	2
¤AN380C2-2	13C	2
AN380C2-2	47 - 3	4
AN380C2-2	47 - 11	4
AN380C2-2	53	6
AN381-2-6	12	4
AN381-2-6	12	2
AN385-30-6	25 - 14	1
AN392-11	13B- 12	2
AN392-13	10 - 88	5
¤AN392-13	11 - 50	2
AN392-13	16	1
AN392-13	58 - 22	1
¤AN392-13	58A	1
AN392-15	58 - 95	1
¤AN392-15	58A	1
AN392-17	31 - 24	2
AN392-17	31 - 83	2
AN392-17	31 - 93	2
AN392-17	31 - 96	2
AN392-19	31 - 3	1
AN392-19	31 - 89	1
AN392-21	12 - 10	2
¤AN392-21	41A- 20	1
AN392-23	12 - 18	2
AN392-23	31 - 15	1
AN392-23	31 - 27	4
AN392-23	33 - 4	2
AN392-23	33 - 11	2
AN392-23	36 - 40	2
AN392-23	36A- 41	2
AN392-23	41 - 42	4
¤AN392-23	41A- 13	1
AN392-27	31 - 18	1
AN392-27	31 - 21	1
AN392-27	36 - 39	2
AN392-27	36A- 34	2
¤AN392-27	37 - 36	2
AN392-35	31 - 8	2
AN392-37	32 - 21	3
AN392-37	42 - 15	1
AN392-43	32 - 22	2
AN393	47C- 13	1
AN393	47C- 19	1
AN393-13	36 - 85	2
AN393-13	36A- 86	2
¤AN393-13	37 - 67	2
AN393-15	48 - 42	1
¤AN393-15	48A- 42	1
AN393-15	56 - 17	2
AN393-29	36 - 81	1
AN393-29	36A- 82	1
¤AN393-29	37 - 84	1
AN393-37	10 - 15	5
AN393-37	12C- 2	4
AN393-63	10 - 1	2
AN393-69	10 - 86	1
AN393-7	16 - 13	2
AN393-7	16 - 30	1
AN393-7	16 - 32	1
AN393-77	39 - 5	1
AN393-9	56 - 16	2
AN394-33	38 - 9	2
AN395-6-1	14	3
AN4	12A- 20	2
AN4	13A- 20	4
AN4	13A	4
AN4	13A- 30	4
AN4	13A- 37	4
AN4	13C	4
AN4	49 - 81	2
AN4	49C	2
AN4	57 -105	4
AN4	57 -116	4
AN4	63 -106B	1
AN4-H-5A	49K- 30	8
AN4-10	38 - 25	2
AN4-10A	21 - 2	1
AN4-10A	21A- 2	2
AN4-10A	22 - 3	2
AN4-10A	22A- 3	2
AN4-10A	31 - 2	1
AN4-10A	31 - 5	1
AN4-10A	31 - 13	1
AN4-10A	31 - 26	2
AN4-10A	31 - 38	1
AN4-10A	31 - 88	1
AN4-10A	33 - 3	1
AN4-10A	33 - 10	2
AN4-10A	33 - 16	2

PART NUMBER	FIGURE & INDEX NO.	QTY. PER ART.
AN4-10A	36 - 53	2
AN4-10A	36 - 57	12
AN4-10A	36A- 51	2
AN4-10A	36A- 55	12
¤AN4-10A	58A	2
¤AN4-10A	58A	1
AN4-10A/M/	20 - 6	1
AN4-10A/M/	26 - 6	4
¤AN4-10A/M/	37 - 59	2
¤AN4-10A/M/	37 - 61	12
¤AN4-10A/M/	40 - 19	4
¤AN4-10A/M/	49C	24
AN4-11/M/	26	4
AN4-11A	12 - 25	21
AN4-11A	41B- 7	3
AN4-11A	57A	8
AN4-11A	58 -102	1
¤AN4-11A/M/	51	8
¤AN4-11A/M/	51 - 8	8
AN4-12	41 - 47	1
¤AN4-12/M/	41A- 21	1
AN4-12A	38 - 28	2
AN4-12A/M/	26	4
¤AN4-12A/M/	29 - 1	2
¤AN4-12A/M/	61C- 23	2
¤AN4-13A/M/	44 - 44	1
AN4-14A	13 - 7	2
AN4-14A	31 - 7	1
¤AN4-14A/M/	41C- 4	3
AN4-15A	13	1
AN4-17	31 - 45	2
AN4-21	35 - 4	2
AN4-21A	41 - 19	2
¤AN4-21A/M/	41A- 63	1
AN4-33A	32 - 3	1
AN4-4A	69	4
¤AN4-4A/M/	63 - 67	2
AN4-42A	31 - 10	1
AN4-42A	32	1
AN4-5A	12 - 28	13
AN4-5A	12B- 8	2
AN4-5A	23 - 3	4
AN4-5A	41 - 59	1
AN4-5A	54 - 12	2
AN4-5A	54	1
¤AN4-5A/M/	13C- 34	8
¤AN4-5A/M/	41A- 9	1
AN4-54	32 - 6	1
AN4-54A	38 - 32	2
AN4-6A/M/	27 - 1	4
AN4-6A/M/	28 - 1	12
AN4-63	32 - 11B	1
¤AN4-7A	13E- 25	2
AN4-7A	36 - 66	8
AN4-7A	36A- 64	4
¤AN4-7A/M/	13D- 47	1
AN4-7A/M/	27	2
AN4-7A/M/	34 - 1	4
¤AN4-7A/M/	40 - 20	4
¤AN4-7A/M/	49C	6
AN4-8A/M/	27	2
AN4A	8A- 1	2
AN4A	13B- 21	6
AN4A	13C- 2	8
AN4A	57	4
AN4A	57A- 17	4
AN4A	57D	4
¤AN4A6/M/	8 - 15	2
AN4H12A	69	4
AN4H3A	41 - 57	1
¤AN4H3A/M/	41A- 10	1
AN4H4A	41 - 58	1
¤AN4H4A/M/	41A- 11	1
¤AN4H7A/M/	49C	12
¤AN4076-1	49 -115	2
AN42-4	36 - 86	1
AN42-4	36A- 87	1
¤AN42-4	37 - 68	1
AN42B-16A	16 - 31	1
AN426AD5	49C	32
AN5-13	36 - 46	2
AN5-13	36A- 35	2
¤AN5-13/M/	37 - 40	2
¤AN5-13A/M/	37A- 26	12
¤AN5-14A/M/	37A- 11	12
AN5-17	39 - 19	1
AN5-21A	13A- 13	2
AN5-22	38 - 16	2
AN5-30A	58A	1
AN5-35A	37I- 26	12
¤AN5-6A	37	10
¤AN5H5A/M/	37G- 17	2
AN500-A10-32	48B- 22	2
AN500-A8-10	48C- 19	3
AN500-A8-8	48C- 17	9
AN500-10	57 - 66	4
AN500-10-8	57G- 9	12
AN500-8-10	57F- 9	12
AN500A10-10	39 - 8	3
AN500A10-10	39 - 15	9
AN500A10-10	57B- 16	4
AN500A10-8	39	2
AN500A10-8	57 - 68	8
AN500A416	57B- 14	6
AN500A632-4	25A- 22	4
AN500A8-1	52	4
AN501-A10-6	49K- 16	AR
AN501-A10-6	49K- 39	8
AN501-A10-6	49K- 47	8
AN501-A10-65	49K- 18	8
AN501-A10-8	48C- 20	4
AN501A10	48 - 17	2
AN501A10	48	2
AN501A10	48A- 17	2
AN501A10	48A	2
AN501A10-4	37D- 10	2
AN501A10-4	37E	2
¤AN501A10-4	37F- 8	2
¤AN501A10-6	70	4
AN502-10	57 - 4	20

PART NUMBER	FIGURE & INDEX NO.	QTY. PER ART.
AN502-10	57 - 49	10
AN502-10	57A- 38	10
AN502-10	57A- 42	20
¤AN502-10-10	29 - 2	8
AN502-10-10	33 - 6	2
AN502-10-10	66	5
AN502-10-10/M/	30 - 1	4
AN502-10-4	36A- 68	2
¤AN502-10-4	37G- 20	2
AN502-10-6	35 - 25	4
AN503-10-6	49D	1
AN503-10-8	49D	2
AN503-8-6	59 - 15	6
AN505-632-5	25A- 12	4
AN505-832-46	25A- 3	2
AN507-10	49 - 87	4
AN507-1032	8 - 72	4
AN507-1032	18 - 19	40
AN507-1032R5	58 - 17	1
AN507-1032R7	58 - 16	3
AN507-4	11	2
AN507-4R4	71 - 35	2
AN507-440R4	10 - 12	6
AN507-6-6	9	6
AN507-6-6	14 - 53C	1
AN507-6-6	14A- 51	1
AN507-6R	48 - 81	4
AN507-6R	48A- 87	4
AN507-632	10 - 45	1
AN507-632	54 - 32	4
AN507-632	61A- 38	6
AN507-632	61B- 37	6
AN507-632	63 - 63B	2
AN507-632-20	68	1
AN507-632-8	10 - 78	15
AN507-632-8	18 - 21	12
AN507-632-8	68	3
AN507-632R	48	2
AN507-632R	48A	4
AN507-632R	63 - 46	1
AN507-632R	63 - 61	1
AN507-632R10	10 - 76	2
¤AN507-632R10	64	3
¤AN507-632R5	64	4
¤AN507-632R5	64	4
AN507-632R6	10 - 8	2
AN507-632R6	10 - 23	46
¤AN507-632R6	11 - 14	56
¤AN507-632R7	6	8
¤AN507-632R7	11 - 4	12
¤AN507-632R7	11B	AR
AN507-632R7	58 - 9	4
AN507-632R7	58 -113	4
¤AN507-632R7	63 - 63	2
AN507-640R4	62	4
AN507-8R	48A- 71	3
AN507-8R	49 - 93	5
AN507-8R	49C	2
AN507-8R8	17	5
AN507-8R8	58	1
AN507-832	18	32
AN507-832	18 - 47	12
AN507-832	18 - 62	24
AN507-832	49 -101	2
AN507-832	49 -103	2
AN507-832	49 -105	2
AN507-832	49C	6
AN507-832	51 - 4	20
AN507-832	51 - 6	20
AN507-832-10	7	6
AN507-832-6	10 - 24	2
AN507-832-6	10 - 44	1
AN507-832-8	11 - 39	12
AN507-832-8	27 - 47	2
AN507-832-8	28 - 34	1
AN507-832R	48 - 4	6
AN507-832R	48A- 4	6
AN507-832R	53 - 6	24
AN507-832R	53A- 19	24
AN507-832R	57 - 79	8
AN507-832R	57B- 26	8
AN507-832RH	18 - 40	6
¤AN507-832R10	29 - 8	2
AN507-832R10	58 - 10	3
¤AN507-832R10	61C	3
AN507-832R18	10	2
AN507-832R7	18 - 28	64
¤AN507-832R7	29 - 6	28
¤AN507-832R7	29 - 7	2
AN507-832R7	30 - 7	4
AN507-832R7	30 - 9	4
AN507-832R8	10 - 13	2
¤AN507-832R8	17A	5
¤AN507-832R8	62	4
¤AN507-832R9	11 - 34	12
AN507B1032R	61B	4
AN507B1032R	61B	4
AN507B1032R	61C	AR
AN507B1032R	61C	8
AN507B632	61B	4
AN507B632	61B	4
AN507B632	66	4
AN507B632R	61A	4
AN507B632R	61A	8
AN507B632R	61A	8
AN507B632R	61A	8
AN507B632R	61A	4
AN507B632R	61A	4
AN507B632R	61A	8
AN507B632R	61A	4
AN507B632R	61A	4
AN507B632R	61A	3
AN507B632R	61A	4
AN507B632R	61A	4
AN507B632R	61A	8
AN507B632R	61A	8
AN507B632R	61B	4
AN507B632R	61B	4
AN507B632R	61B	4
AN507B632R	61B	4

PART NUMBER	FIGURE & INDEX NO.	QTY. PER ART.
AN507B632R	61B	4
AN507B632R	61B	4
AN507B632R	61B	4
AN507B632R	61B	4
AN507B632R	61B	8
AN507B632R	61B	8
AN507B632R	61B	4
AN507B632R	61B	4
AN507B632R	61C	AR
AN507B632R	61C	21
AN507B632R	61C	AR
¤AN507B632R7	6	2
¤AN507B632R7	6	4
AN507B832	61C	4
AN507B832	61C	4
AN509-10R	12A- 14	8
AN509-10R	61C	3
AN509-10R11	8A- 3	6
AN509-10R12	10	2
AN509-10R28	58 - 52	2
AN509-10R28	58 - 54	1
AN509-1032	13B	16
AN509-1032R9	57 - 27	48
AN509-1032R9	57D- 93	48
AN509-416R6	64	3
AN509-8R	18 - 44	8
AN509-8R	18 - 53	6
AN509-8R	18 - 57	18
AN509-8R	27	24
AN514-4	63 - 79	4
AN515-R832	53	8
AN515-10R	47C- 6	1
AN515-10R	58A	4
¤AN515-10R10	47D	1
¤AN515-10R8	47D	AR
AN515-1032	58	4
AN515-4	47C- 33	2
AN515-4-4	68	2
AN515-4-4	69	1
AN515-4-4	69	2
AN515-4-8	53A- 10	6
AN515-4-8	53A- 12	4
AN515-4R14	58	4
AN515-4R14	58A	4
AN515-4R18	71	2
AN515-440	51 - 30	18
AN515-440	53 - 15	4
AN515-440	53 - 24	4
AN515-440R	64 - 8	3
AN515-440R5	58 -140	6
AN515-6	13B- 15	2
AN515-6	15 - 25	4
AN515-6	15 - 32	3
AN515-6	31 - 10B	2
AN515-6	47C	1
AN515-6	53 - 16	4
AN515-6	53 - 25	4
AN515-6	58 -136G	2
AN515-6	58	2
AN515-6-4	61A- 31	8
AN515-6-4	61B- 57	2
AN515-6-4	63 - 82	2
AN515-6-4	68	2
AN515-6-40	46	1
AN515-6-5	47C	2
AN515-6-6	10 - 93	3
AN515-6-6	15	2
AN515-6R	15	4
AN515-6R	17A	1
AN515-6R	47D	3
AN515-6R	61C	1
AN515-6R	67	7
¤AN515-6R10	48A- 77	2
¤AN515-6R10	63 - 92	1
¤AN515-6R10	63	4
AN515-6R18	58 -122	1
AN515-6R4	15 - 16	4
AN515-6R6	14 - 53B	2
AN515-6R6	14A- 50	2
AN515-6R6	58 - 3	2
¤AN515-6R6	58A	2
¤AN515-6R6	60	4
¤AN515-6R6	64	2
¤AN515-6R7	63 -100	5
¤AN515-6R8	13C- 19	4
AN515-6R8	26 - 11	2
¤AN515-6R8	29	2
¤AN515-6R8	60 - 39	1
¤AN515-6R8	63	5
¤AN515-6R8	63 -103	5
AN515-632	12A- 35	2
AN515-632	63 - 29	4
AN515-632	63 - 42	4
AN515-632	63 - 51	4
AN515-632	63 - 59	4
AN515-632R6	58 - 97	2
AN515-8	18	32
AN515-8	48 - 2	6
AN515-8	48A- 2	6
AN515-8	58	2
AN515-8	58 -150	9
AN515-8	61C	6
AN515-8	62	10
AN515-8	62A	10
AN515-8-12	53A- 9	2
AN515-8-14	46	1
AN515-8-20	48B- 15	2
AN515-8-36	63 - 61M	1
AN515-8-6	58 -144	4
AN515-8-6	63 -1048	3
AN515-8-7	46	2
AN515-8-7	46	1
AN515-8-7	46	4
AN515-8-8	38 - 15	2
AN515-8R	14B	5
AN515-8R	17A	2
AN515-8R	18	6
AN515-8R	48 - 73	1
AN515-8R	48 - 86	4
AN515-8R	48 - 91	4

PART NUMBER	FIGURE & INDEX NO.	QTY. PER ART.
AN515-8R	48 - 96	6
AN515-8R	48A- 93	4
AN515-8R	48A- 98	4
AN515-8R	48A-103	6
¤AN515-8R	50 - 17	20
¤AN515-8R	50 - 25	2
¤AN515-8R	50 - 27	2
AN515-8R	52A- 15	4
AN515-8R	57A- 23	2
AN515-8R	57D	2
AN515-8R	58A	6
AN515-8R	58A	2
AN515-8R	58A	2
AN515-8R	63 - 23	1
AN515-8R	63 - 54	8
AN515-8R	63 - 71	1
AN515-8R	63	2
AN515-8R	63	4
AN515-8R14	42 - 46	2
AN515-8R36	63	1
¤AN515-8R5	63 -114	4
AN515-8R6	31 - 66	2
¤AN515-8R6	58A	1
AN515-8R6	66	10
¤AN515-8R7	49 - 73	6
¤AN515-8R7	63 - 49	4
¤AN515-8R8	9A- 33	2
¤AN515-8R8	47D	4
AN515-8R8	48 - 58	3
¤AN515-8R8	48A- 59	3
AN515-8R8	58	1
¤AN515-8R8	62A	4
AN515-8R8	66	1
AN515-8R8	68 - 31	4
¤AN515-8R9	63 -115	3
AN515-832	34	32
AN515-832	34 - 30	4
AN515-832	49 - 50C	8
AN515-832	49A	8
AN515-832	49C	2
AN515-832	58	6
AN515-832	63 - 61C	2
AN515-832	63 - 61F	2
AN515-832	63 - 61J	1
AN515-832R8	30 - 16	1
AN515B632R	14 - 2F	2
AN515B8	18 - 60	16
AN515B8-7	11B- 4A	3
AN515B8R	14 - 2	5
AN515B8R8	11 - 10	2
AN515B832R	14 - 2D	3
AN515C6R12	47D	1
AN515DD440	48 - 69	3
AN515R6	63 - 76	4
AN515R832	53	8
AN520-R10	58 -132	6
AN520-R8	53	14
AN520-10	34 - 39	46
AN520-10	48	4
AN520-10	48A	4
AN520-10	54 - 16	2
AN520-10	56 - 2	8
AN520-10	57A- 20	2
AN520-10	58 -129C	16
AN520-10	58 -153	3
AN520-10	63 - 33	3
AN520-10	63 - 35	2
AN520-10-10	23 - 10	1
AN520-10-10	46 - 36	1
AN520-10-14	14D	8
AN520-10-8	22 - 7	14
AN520-10-8	23 - 6	4
AN520-10-8	46	2
AN520-10-8	46	1
AN520-10-8	46	2
AN520-10-8	49 - 56	4
AN520-10R	48 - 53	2
AN520-10R	48 - 62	2
AN520-10R	48	3
AN520-10R	48A- 54	2
AN520-10R	48A- 63	3
AN520-10R	48A- 73	2
AN520-10R	49	8
AN520-10R	49 -113	8
AN520-10R	49A	4
AN520-10R	49C	4
AN520-10R	52 - 8	2
AN520-10R	54 - 18	4
AN520-10R	54 - 21	4
AN520-10R	54 - 34	1
AN520-10R	54	1
AN520-10R	58A	3
¤AN520-10R	58A	2
AN520-10R	61C	4
AN520-10R	61C	5
AN520-10R	61C	3
AN520-10R	63 - 26	1
AN520-10R	63 - 55	2
AN520-10R	63	4
AN520-10R	64	3
AN520-10R	65	3
AN520-10R	65	4
AN520-10R	65	1
AN520-10R	65	2
AN520-10R	66	2
¤AN520-10R10	64A	8
AN520-10R22	48 - 19	2
AN520-10R22	48A- 19	2
AN520-10R26	64A	2
¤AN520-10R5	63 - 33B	2
¤AN520-10R6	64A	2
AN520-10R8	10 - 10	1
¤AN520-10R8	60	3
¤AN520-10R8	60	1
¤AN520-10R8	64A	3
AN520-10R8	66	2
AN520-1032R8	58 - 73	3
AN520-4R	17	2
AN520-4R	63 - 98B	2
AN520-416R	63	6

PART NUMBER	FIGURE & INDEX NO.	QTY. PER ART.
AN520-6	49 - 79	6
AN520-6	49 - 83	3
AN520-6	49C	18
AN520-6	58 -136A	6
AN520-6	58 -136F	8
AN520-6R4	62A	4
AN520-6R5	63	1
AN520-8	53 - 13	16
AN520-8-8	23 - 8	1
AN520-8R	49 - 92	2
AN520-8R	49C	2
AN520-8R	61C	8
AN520-832	53 - 42	2
AN520C10R	51	24
AN520R10	34 - 20	4
AN520R10	67	5
AN520R1032	8 - 13	5
AN520R1032	17A	2
AN520R1032	67	3
AN520R1032	67	1
AN520R1032	67	2
AN520R1032	67	2
AN520R416	63 - 79B	1
AN525-10	10 - 63	2
AN525-10	10 - 65	1
AN525-10	13B	40
AN525-10	14A	AR
AN525-10	14A	AR
AN525-10	18 - 66D	10
AN525-10	18 - 66F	14
AN525-10	18 - 68	10
AN525-10	18 - 70	10
AN525-10	58 -129B	50
AN525-10-10	40	4
AN525-10-10	40 - 8	8
AN525-10-16	12A- 11	2
AN525-10-16	12B- 1	4
AN525-10-24	40 - 7	6
AN525-10-8	10 - 28	6
AN525-10-8	10 - 34	1
AN525-10-8	40	4
AN525-10R	18 - 60C	40
AN525-10R	49 - 89	28
AN525-10R	49C	28
AN525-10R	51 - 2B	8
AN525-10R	68	4
▫AN525-10R10	13C	4
AN525-10R10	58	3
▫AN525-10R12	64A	17
▫AN525-10R14	13D	4
▫AN525-10R14	13E	4
AN525-10R22	13D	4
AN525-10R22	13D	4
AN525-10R22	13E	4
▫AN525-10R6	8 - 45	10
AN525-10R7	10 - 52	1
▫AN525-10R8	64A	2
AN525-10R9	10 - 60	1
AN525-1032	13B	4
AN525-1032	27	8
AN525-1032	28 - 41	18
AN525-1032R	18 - 15	24
AN525-8	18	32
AN525-8	18	52
AN525-8	18 - 66B	AR
AN525-8	45	8
AN525-8	51	20
AN525-8	51	20
AN525-8R	17 - 4	17
AN525-8R	18 - 58	AR
AN525-8R	50 - 18	6
▫AN525-8R	50 - 20	8
AN525-8R6	10 - 43	2
AN525-832	18 - 49	20
AN525-832-11	14 - 66	1
AN525-832-8	30 - 5	4
AN525-832R	18 - 13	20
AN525-832R	18	24
▫AN525-832R11	13C- 65	1
AN525-832R6	10 - 25	2
AN525-832R7	19A- 94	14
▫AN525-832R7	49 - 74	2
AN526-C1032-R8	49K- 1	28
AN526-10-16	12 - 8	2
AN526-10R	9	2
AN526-1032-5	37A- 4	8
AN526-1032R8	9	4
AN526-6R14	58	2
AN526-632	63 - 2	3
AN526-632	63 - 4	3
AN526-632	63 - 13	3
AN526-632	63 - 15	3
AN526-632-22	36 - 69	2
AN526-632-22	36A- 71	2
AN526-632-22	37 - 73	2
AN526-632-6	20 - 17	1
AN526-632-7	22A	4
AN526-632R7	30 - 18	2
AN526-832-6	18 - 51	6
AN526-832-8	54 - 29	2
AN526-832R6	33 - 19	1
AN526-832R7	11 - 18	1
AN526-832R7	11 - 22	1
AN526-832R7	19 - 80	14
AN526-832R8	30 - 8	6
AN526-832R9	17 - 6	3
AN526-852-8	10 - 90	2
AN530-2R4	61A- 17	4
▫AN530-2R4	61B	2
▫AN530-2R4	61C	2
AN530-4	58A	2
AN530-4R	63 - 86	4
AN530-4R4	13D- 54	4
AN530-4R4	13E- 31	4
▫AN530-4R6	63 - 88	6
▫AN530-4R6	63 - 90	2
AN530-6	9 - 16	2
AN530-6	14	2
AN530-6	14A- 24	2
AN530-6-4	15 - 6	9

PART NUMBER	FIGURE & INDEX NO.	QTY. PER ART.
AN530-6-4	15 - 11	3
AN530-6-4	61C	9
AN530-6-6	15	6
AN530-6R	14 - 21	22
AN530-6R	14 - 24	4
AN530-6R	14 - 26	3
AN530-6R	14A- 81	22
AN530-6R	14B	16
AN530-6R	15	1
AN530-6R	15	1
AN530-6R10	58	2
AN530-6R4	12B- 3	6
AN530-6R5	13E- 33	20
AN530-6R6	14 - 40	2
AN530-6R6	14A- 87	2
AN530-6R6	14A- 89	1
AN530-6R6	14A- 92	1
AN530-6R7	61C	1
AN530-6R8	14A- 90	1
AN530-6R8	14A- 93	1
▫AN530-6R8	64 - 31	3
▫AN530-6R8	64A	3
AN530-8	11A	AR
AN530-8	11A	AR
AN530-8	11A	AR
AN530-8	11A	AR
AN530-8	11A	AR
AN530-8	11A	AR
AN530-8-8	16 - 22	2
AN530-8R	48A- 75	4
AN530-8R	48A- 81B	2
▫AN530-8R6	13C- 63	6
AN530-8R6	14	2
AN530-8R6	14	4
▫AN530-8R6	17 - 2	12
▫AN530-8R6	64A	2
AN535-0-3	37A- 15	4
AN535-0-3	37A- 18	4
AN535-2-2	25	2
AN535-2-2	25A- 41	2
AN545-8R7	8 - 7	8
▫AN5541-1	49 -114	2
AN565A6H4	47C	1
AN565D632H3	25A- 4	2
AN565D632H4	25A- 31	1
AN565D8H14	48B- 41	2
AN565D8H2	71	1
AN565D8H5	58 - 34	2
AN5812-1	62 - 1	1
AN6	12B- 16	4
AN6-11A	38 - 5	4
AN6-11A	38 - 14	2
AN6-25/M/	34 - 12	2
AN6-30A	42 - 29	2
▫AN6-31A/M/	41A- 28	1
▫AN6-35A/M/	49 - 39	8
▫AN6-35A/M/	49C	8
AN6-36	42	1
▫AN6H26A/M/	37G- 22	4
▫AN6012-1A	64 - 12	1
AN6204-2	36A- 66	2
AN6227-1	43 - 12	2
AN6227-10	47 - 9	4
▫AN6227-13	43 - 10	4
AN6227-24	36 - 20	2
AN6227-31	36 - 31	2
AN6227-31	36A- 22	2
AN6227-5	41 - 14	1
AN6227-5	47 - 8	4
AN6227-6	36 - 33	4
▫AN6227-6	41	1
AN6227-6	41A	1
AN6227-7	43 - 11	2
AN6227-8	27	2
AN6227-9	39 - 12	1
AN6227-9	47 - 13	4
▫AN6227B13	24 - 13	2
▫AN6227B13	44 - 20	1
▫AN6227B23	37F- 7	4
▫AN6227B27	37G- 4	2
▫AN6227B27	37I- 3	4
▫AN6227B31	37 - 48	2
▫AN6227B7	37I- 14	2
▫AN6227B7	37I- 18	2
AN6230-B2	37D- 9	2
AN6230-B2	37E- 9	2
AN6230-B3	37D- 7	2
AN6230-B3	37E- 7	2
AN6230-1	41 - 26	2
AN6230-2	36 - 24	2
▫AN6230-2	41 - 25	1
AN6230-7	36A- 24	2
▫AN6230B1	41A- 55	1
▫AN6230B2	41A- 54	1
▫AN6230B29	37B	2
AN6230B30	37B- 10	2
▫AN6230B37	37A- 29	2
▫AN6230B5	37 - 47	2
AN6231A19	41 - 22	2
▫AN6231A19	41A- 57	1
AN6231A20	36 - 32	2
AN6264-4-16	48 - 20	2
AN6264-4-16	48A- 20	1
AN6270-4	62A- 12	1
AN6270-4	62A- 82	1
▫AN6270-4-12	62 - 12	1
▫AN6270-4-15	62 - 33	2
AN6270-4-17	62 - 28A	2
AN6270-4-17	62 - 32	1
▫AN6270-4-20	62 - 28	3
▫AN6270-4-20	62 - 37	1
AN6270-4-25	62 - 36	1
AN6270-4-27	62	1
AN6270-6	62A- 79	2
AN6270-6-14	62 - 49	2
AN6290-10	69	2
AN6290-10	69 - 28	2
AN6290-4	36A	2
AN6290-4	36A- 67	2
AN6290-5	36 - 30	2

PART NUMBER	FIGURE & INDEX NO.	QTY. PER ART.
AN6290-5	36	2
AN6290-5	36A- 29	2
AN6290-6	36A	2
AN6290-6	37D- 14	2
AN6290-6	37E- 11	4
▫AN6290-6	37F- 12	4
AN6290-6	56 - 11	2
AN6290-6	56 - 14	2
AN6290-8	56	2
AN659-1	63 - 16	1
AN659-2	63 - 17	1
AN659-5	39	1
AN665-10R	32 - 14	6
AN665-10R	38 - 43	2
AN665-21R	10 - 95	1
AN666-2RH	38 - 41	2
AN667-2	38 - 40	2
AN669S2	31	2
AN669S2	32	2
AN669S2L	27 - 14	4
AN669S2RH	31 - 77	2
AN6914-1024	27 - 48	2
▫AN7-34A/M/	49 -107	8
▫AN7-34A/M/	49C- 3	8
AN73-A6	37D- 4	12
AN73-15	39 - 37	3
AN73A3	23 - 13	8
AN73A3	25 - 1	4
AN73A4	25A- 1	4
AN737	50 - 11	2
AN737-30	57A	2
AN737-30	57A	2
▫AN737RM22	49	2
▫AN737RM22	49	1
▫AN737RM22	49	4
▫AN737RM22	49	4
▫AN737RM22	49C	4
AN737RM22	53A	4
▫AN737RM22	57D	4
▫AN737RM22	57D	8
▫AN737RM22	57D	4
▫AN737RM22	57D	6
▫AN737RM22	57D	4
▫AN737RM22	57D	4
▫AN737RM22	57D	4
▫AN737RM22	57D	4
AN737RM22	65 - 17	2
▫AN737RM24	63 - 22	1
▫AN737RM24	63 - 70	1
AN737RM24	69	4
AN737RM24	69	4
AN737RM24	69	2
▫AN737RM24	70	2
▫AN737RM24	70	1
▫AN737RM24	70	4
▫AN737RM24	70	1
▫AN737RM26	67	6
▫AN737RM26	67	4
▫AN737RM26	67	4
▫AN737RM26	67	2
▫AN737RM26	67	6
▫AN737RM26	67	1
▫AN737RM26	67	2
▫AN737RM26	67	2
▫AN737RM26	67	2
▫AN737RM26	67	10
▫AN737RM26	67	4
▫AN737RM26	67	2
AN737RM26	69	2
▫AN737RM26	70	1
AN737RM26	70	4
▫AN737RM30	49	2
▫AN737RM30	49	4
▫AN737RM30	49	4
▫AN737RM30	49	4
▫AN737RM30	49A	4
▫AN737RM30	49A	4
▫AN737RM30	49A	4
▫AN737RM30	49A	4
▫AN737RM30	49C	4
▫AN737RM30	49C	4
▫AN737RM30	49C	4
▫AN737RM30	57D	2
▫AN737RM30	57D	2
▫AN737RM38	49	2
▫AN737RM38	49	4
▫AN737RM38	49A	4
▫AN737RM38	49C	4
▫AN737RM46	49	2
▫AN737TW34	62	6
▫AN737TW34	62	2
▫AN737TW34	62A- 71	12
▫AN737TW38	49	4
AN737TW91	57D- 27	4
AN737TW98	69	2
AN74-A3	53	8
AN74-3	57 - 28	48
▫AN74-3/M/	57D- 92	48
AN74-4	57 - 8	48
AN74-4	57A- 47	48
AN74A11	57A- 9	8
AN74A3	53 - 10	12
AN74A3	53	4
AN74A5	12C- 17	4
AN74A5	12C- 20	2
AN742	49	2
AN742	49	1
▫AN742-10	63 - 25	1
AN742-3	47D- 58	AR
AN742-3	47D- 60	1
AN742-3	67	2
AN742-4	16 - 23	2
▫AN742-4	47C- 5	1
AN742-4	65	1
AN742-4	65	2
AN742-4	66	2
▫AN742-6	67	2
AN742-6C	46	2
AN742-6C	46	1
AN742-6C	46	1

PART NUMBER	FIGURE & INDEX NO.	QTY. PER ART.
AN742D3	54 - 28	2
▫AN742D8	49 -100	4
AN742D9C	23 - 5	4
AN742D9C	23 - 9	1
▫AN743-13	47C- 11	2
▫AN743-13	47C- 17	2
▫AN743-13	47D- 59	1
AN743-13	65	1
AN743-6	23 - 7	1
AN743-6	46	2
AN743-6	46	1
AN749-1-4	26 - 10	1
AN749-1-4	66	1
AN749-1-6	66 - 13	1
AN7502-20	41 - 62	1
▫AN7502-20	41A	1
AN7502-24	36 - 59	2
AN7502-24	36A- 57	2
▫AN7502-24	37 - 64	2
AN7510-1	20 - 10	1
AN7510-1	28 - 39	1
▫AN780-3	64 - 13	1
▫AN780-3	64 - 19	1
▫AN780-3	64A- 12	2
▫AN780-3	64A- 18	1
AN783-6	57 -111	2
AN783-6D	57A	1
AN783-6D	57D- 5	1
AN783D6	57 - 62	2
▫AN791-3	64 - 11	1
▫AN795-3	64A- 14	1
AN8008D10	61C- 65	2
AN8013-2	61C	2
▫AN8013D2	61C	2
AN804-4D	46 - 69	1
AN804-4D	57B- 39	1
AN807-6D	67 - 73	2
AN807-8D	49C- 53	1
AN809-1	36 - 28	2
AN809-1	36A- 27	2
AN809-1	37 - 43	2
AN812-1	56 - 20	2
AN813-1A	36 - 29	2
AN813-1A	36A- 28	2
AN813-1B	41 - 35	2
▫AN813-1B	41A	1
AN815-4	48 - 65	1
AN815-4	48 - 93	1
▫AN815-4	48A- 67	1
▫AN815-4	48A-100	1
▫AN815-4C	67	1
AN815-4D	36 - 51	1
AN815-4D	36A- 49	2
AN815-4D	36A	2
▫AN815-4D	37I- 17	2
AN815-4D	46 - 5	2
AN815-4D	46 - 32	2
AN815-4D	46 - 45	2
AN815-4D	57B	2
▫AN815-4D	62 - 22	1
▫AN815-4D	62A- 17	1
▫AN815-4D	62A- 21	1
AN815-4D	66 - 32	2
▫AN815-5D	64A- 41	1
▫AN815-5D	64A- 44	1
▫AN815-5D	64A- 46	1
▫AN815-5D	64A- 48	1
▫AN815-5D	64A- 64	1
▫AN815-5D	64A- 67	1
AN815-6	57	1
AN815-6D	57 - 43	5
AN815-6D	57A	2
AN815-6D	57A	2
AN815-6D	57A	1
▫AN815-6D	57D- 25	2
▫AN815-6D	57D- 49	2
▫AN815-6D	57D- 54	1
▫AN815-6D	70 - 9	1
▫AN815-8D	68 - 36	2
AN815-8R	48 - 66	4
▫AN816-10	68 - 55	1
▫AN816-2D	62 - 53	3
▫AN816-2D	62 - 55	1
▫AN816-2D	62A- 87	1
▫AN816-2D	62B- 4	2
AN816-4	48 - 54	2
▫AN816-4	48A- 55	2
AN816-4B	65 - 12	1
AN816-4B	66 - 27	1
AN816-4D	46 - 17	1
AN816-4D	46 - 50	1
AN816-4D	57	2
▫AN816-4D	62 - 18	2
▫AN816-4D	62A- 13	1
▫AN816-4D	62A- 54	2
▫AN816-4D	62A- 66	2
▫AN816-4D	62A- 80	1
▫AN816-4D	62B	2
▫AN816-4D	62B- 29	1
▫AN816-4D	62B- 41	2
AN816-4D	65 - 33	4
AN816-4D	66 - 44	4
▫AN816-5D	64 - 29	1
▫AN816-5D	64 - 42	2
▫AN816-5D	64 - 46	1
▫AN816-5D	64A- 50	1
▫AN816-5D	64A- 69	2
AN816-6D	57	2
AN816-6D	57A	2
▫AN816-6D	57D- 33	4
▫AN816-6D	62 - 58	2
▫AN816-6D	62A- 81	1
▫AN816-6D	67 - 32	1
▫AN816-8D	67 - 40	1
▫AN816-8D	68 - 4	2
AN816-8D	69 - 31	2
AN818-4	67	2
▫AN818-4D	67 - 64	2
AN819-4	67	2
▫AN819-4Z	67	2

PART NUMBER	FIGURE & INDEX NO.	QTY. PER ART.
AN821-4D	46 - 33	1
AN821-4D	57 - 59	2
AN821-4D	57B	1
AN821-4D	57B	2
AN821-4D	57B	2
AN821-4D	57B	2
AN821-4D	57B	2
AN821-4D	57C	2
▫AN821-4D	57D- 65	2
AN821-5D	64	1
AN821-6	48C- 16	1
AN821-6D	57 - 94	2
AN821-6D	57 -108	4
AN821-6D	57A	2
AN821-6D	57A	2
▫AN821-6D	57D- 42	2
▫AN821-6D	67 - 18	4
▫AN821-6D	70 - 7	2
▫AN822-10D	62	2
▫AN822-10D	62A- 68	2
AN822-10D	68 - 61	1
AN822-2D	57 - 85	2
▫AN822-2D	62 - 50	1
▫AN822-2D	62 - 54	1
▫AN822-2D	62 - 57	1
▫AN822-4	37	2
AN822-4	48	2
AN822-4	48 - 60	2
AN822-4	48	4
▫AN822-4	48A	1
▫AN822-4	48A- 61	4
AN822-4	65 - 16	1
AN822-4D	46	1
AN822-4D	46 - 24	1
AN822-4D	46 - 49	3
AN822-4D	46 - 61	2
▫AN822-4D	49C- 63	2
AN822-4D	57	2
AN822-4D	57	2
AN822-4D	57A	2
AN822-4D	57C- 25	2
▫AN822-4D	62A- 27	1
AN822-4D	66 - 22	2
▫AN822-5D	64 - 38	1
AN822-6	57 -117	3
AN822-6	57	2
AN822-6D	57 - 80	8
AN822-6D	57 -	4
AN822-6D	57 -127	2
▫AN822-6D	57D- 12	2
▫AN822-8	49 - 96	2
▫AN822-8	49C- 25	2
▫AN822-8D	49 - 50	1
▫AN822-8D	49A- 19	1
▫AN822-8D	49C	1
AN822-89	68 - 62	1
AN823-2D	62A- 39	2
AN823-4	46 - 14	4
AN823-4	57A	2
AN823-4D	46 - 62	2
AN823-4D	57 - 84	2
AN823-4D	57	2
AN823-4D	57A	2
AN823-4D	57A	2
AN823-4D	57D- 35	2
▫AN823-4D	62 - 44	2
AN823-4S	46	2
AN823-5	65 - 34	4
AN823-5	66 - 45	4
AN823-6	57 -118	1
▫AN823-6D	62 - 51	2
▫AN823-6D	62A- 78	3
▫AN823-8	49C- 40	2
AN824-4D	46 - 68	1
AN824-4D	57 - 31	2
AN824-4D	57 - 52	2
AN824-4D	57C	2
AN824-4D	57C	2
▫AN824-4D	57D- 76	2
▫AN824-4D	62 - 21	1
▫AN824-4D	62A- 15	1
▫AN824-5D	64 - 36	1
▫AN824-5D	64A- 39	1
▫AN824-5D	64A- 62	1
AN824-6D	57A	2
AN824-6D	57A	2
▫AN824-6D	57D- 16	2
▫AN824-6D	68 - 7	2
AN824-6D	69 - 8	2
▫AN825-4D	62A- 25	1
▫AN825-4D	62B- 31	1
▫AN825-4D	67 - 63	1
AN825-6D	57 - 92	2
AN825-6D	57A	2
▫AN825-6D	57D- 18	2
▫AN826-4D	62 - 17	2
▫AN826-4D	62A- 23	1
▫AN826-4D	62B- 33	1
AN826-4D	66 - 17	1
AN826-6D	57	2
AN826-6D	57A	2
AN832-10D	69 - 15	2
▫AN832-2D	62A- 34	4
AN832-3	57D- 86	2
AN832-4D	36A- 62	2
AN832-4D	46 - 10	1
AN832-4D	46 - 34	1
AN832-4D	46 - 43	1
AN832-4D	46 - 55	1
AN832-4D	57B- 36	1
▫AN832-4D	62A- 10	2
▫AN832-4D	62A- 49	4
▫AN832-4D	62A- 63	2
▫AN832-4D	62A- 85	1
AN832-6	57	1
AN832-6D	57 - 45	4
AN832-6D	57A	2
▫AN832-6D	57D- 51	2
▫AN832-6D	67 - 27	2
▫AN832-6D	67 - 38	1

PART NUMBER	FIGURE & INDEX NO.	QTY. PER ART.
AN833-2	57 -100	2
AN833-2	62A- 30	2
AN833-2D	57 - 98	2
AN833-3	57D- 83	1
▫AN833-4	49	1
▫AN833-4	49C	2
AN833-4	57B	2
▫AN833-4	62A- 43	2
▫AN833-4	62A- 55	2
AN833-4D	46	2
AN833-4D	46 - 30	2
AN833-4D	46	2
▫AN833-4D	49C- 67	2
AN833-4D	57	1
AN833-4D	57B- 30	1
AN833-4D	57B- 33	2
▫AN833-4D	62 - 27	2
AN833-4D	65 - 22	2
AN833-4D	65 - 26	2
AN833-4D	65 - 30	2
AN833-4D	66 - 25	1
AN833-4D	66 - 37	2
AN833-4D	66 - 41	2
AN833-6	57 -113	2
AN833-6	57A	2
AN833-6	57D- 44	2
AN833-6D	56 - 12	2
AN833-6D	57 - 89	4
AN833-6D	57A	2
AN833-6D	57B- 37	2
AN833-6D	57B- 41	1
▫AN833-6D	57D- 11	1
▫AN833-6D	57D- 23	2
▫AN833-6D	57D- 31	2
▫AN833-6D	67 - 42	1
▫AN833-6D	67 - 45	2
▫AN833-8D	49 - 99	4
AN834-4D	46 - 6	1
AN834-4D	57 - 63	1
AN834-4D	57B- 32	1
AN837-2D	62A- 31	2
AN837-3	57D	1
▫AN837-4	49	1
▫AN837-4	49C- 64	2
AN837-4	57A	2
▫AN837-4D	37 - 54	4
AN837-4D	46 - 3	2
AN837-4D	46 - 11	1
AN837-4D	46 - 13	2
AN837-4D	46 - 54	1
AN837-4D	57B- 35	1
▫AN837-4D	62 - 25	6
▫AN837-4D	62 - 59	4
▫AN837-4D	62A- 46	2
▫AN837-4D	62A- 58	4
▫AN837-4D	62A- 83	1
AN837-4D	65 - 24	2
AN837-4D	65 - 28	2
AN837-4D	66 - 35	2
AN837-4D	66 - 39	2
AN837-6	57	2
AN837-6	57A	1
AN837-6D	57A	2
AN837-8D	49C- 30	4
▫AN838-10	68 - 33	2
AN838-10	69 - 39	2
AN839-6D	67 - 16	2
AN840-10	69 - 44	2
▫AN840-6D	67 - 12	6
▫AN840-6D	67 - 23	2
▫AN840-6D	67 - 31	1
▫AN840-6D	67 - 79	1
AN840-6D	69 - 46	2
AN840-6D	69	1
▫AN840-8D	49	1
▫AN842-4D	49 - 62	5
▫AN842-4D	49A- 10	2
▫AN842-4D	62 - 52	2
▫AN842-4D	62 - 56	1
▫AN842-6D	67 - 24	2
▫AN842-6D	67 - 33	2
▫AN842-6D	68	2
AN842-6D	69	1
▫AN842-8	49 - 37	2
▫AN842-8	49C- 49	2
▫AN842-8D	49C- 56	1
▫AN844-10	68 - 28	2
AN844-10	69 - 43	2
▫AN844-4	49C- 33	2
▫AN844-8	49 - 36	2
▫AN844-8	49C- 48	2
▫AN844-8D	49 - 49	1
AN846-4D	62 - 11	1
AN846-4D	62A- 8	1
AN848-10D	62A- 69	2
AN848-4D	62 - 6	1
AN893-2D	57	2
AN894D3-2	57D- 85	2
AN900-9	39	1
AN901-8A	56 - 7	2
AN902-5	36 - 30	2
AN902-5	36	2
▫AN910-1	64A- 11	1
▫AN910-1	64A- 17	1
AN910-1D	57	2
AN910-1D	57	2
AN910-1D	57	2
AN910-1D	57A	2
AN910-1D	57C- 23	2
▫AN910-1D	57D- 38	2
▫AN910-1D	67	1
AN910-2D	57A	2
▫AN910-2D	57D- 19	2
▫AN910-3D	68 - 3	2
AN911-1	46	1
AN911-1	48 - 55	1
▫AN911-1	48A- 56	1
AN911-1	57	2
▫AN911-1D	64 - 26	1
▫AN911-2D	68	1

PART NUMBER	FIGURE & INDEX NO.	QTY. PER ART.
▫AN911-3D	62 - 64	4
AN912-1D	57	2
AN912-1D	57A	2
▫AN912-1D	57D- 20	2
▫AN912-1D	62	1
▫AN912-1D	62	1
▫AN912-2D	67 - 78	1
▫AN912-2D	68	1
AN912-2D	69	1
▫AN912-3	49C- 62	2
▫AN912-4D	49C- 55	2
AN912-4D	69 - 30	2
AN912-4D	69 - 48	2
AN912-8D	62	4
AN913-1	49F- 21	8
▫AN913-1D	62	1
▫AN913-1D	64 - 44	1
▫AN913-1D	64 - 50	1
AN913-1S	49 - 48	2
AN913-1S	57A	2
AN913-2D	62A- 77	2
AN913-2S	48C- 15	2
▫AN914-1	49 - 42	1
AN914-1D	64A- 35	1
AN914-1D	71 - 19	2
AN916-416	16	1
AN917-1D	65 - 13	1
AN917-1D	66 - 28	1
AN917-2D	57 -125	2
▫AN917-2D	67 - 11	2
▫AN918-2D	67 - 22	1
▫AN918-2D	67 - 30	1
▫AN918-2D	68 - 11	1
AN918-2D	69 - 62	1
▫AN918-3D	68 - 13	1
AN918-3D	69 - 64	1
AN919-12D	56	2
▫AN919-120	68 - 5	2
AN919-14D	69 - 11	2
AN919-6D	36 - 63	2
AN919-6D	36A- 61	2
AN919-6D	56 - 10	2
AN919-6D	57A	1
▫AN919-6D	57D	1
▫AN924-10D	62A	2
▫AN924-10D	68	2
AN924-10D	69	2
AN924-10D	69 - 27	2
AN924-10D	69	2
AN924-2	57	2
AN924-2	57	2
AN924-2D	57	2
AN924-2D	62A	2
AN924-2D	62A	2
AN924-2D	62A	4
AN924-3	57D	2
AN924-3	57D	2
AN924-4	36	8
AN924-4	36A	2
▫AN924-4	49	2
▫AN924-4	49C	4
AN924-4	57A	2
AN924-4	57B	2
▫AN924-4	62A	2
▫AN924-4	62A	2
AN924-4	65	2
AN924-4	65	2
AN924-4	65	2
AN924-4	65	2
AN924-4	65	2
AN924-4	66	2
AN924-4	66	2
AN924-4	66	2
AN924-4	66	2
▫AN924-4D	37	4
AN924-4D	46	2
AN924-4D	46	2
AN924-4D	46	2
AN924-4D	46	2
AN924-4D	46	2
AN924-4D	46	1
▫AN924-4D	49C	2
AN924-4D	57	2
AN924-4D	57B	1
AN924-4D	57B	2
▫AN924-4D	62	1
▫AN924-4D	62	6
▫AN924-4D	62	2
▫AN924-4D	62	4
▫AN924-4D	62A	1
▫AN924-4D	62A	1
▫AN924-4D	62A	2
▫AN924-4D	62A	
▫AN924-4D	62A	4
▫AN924-4D	62A	2
▫AN924-4D	62A	1
▫AN924-4D	62A	1
AN924-4D	66	1
▫AN924-4D	67	1
AN924-6	57	2
AN924-6	57	2
AN924-6	57	1
AN924-6	57	1
AN924-6	57A	3
▫AN924-6	57D	2
AN924-6D	56 - 13	2
AN924-6D	57	4
AN924-6D	57 -	2
AN924-6D	57A	2
AN924-6D	57B	2
AN924-6D	57B	1
▫AN924-6D	57D	1
▫AN924-6D	57D	2
▫AN924-6D	57D	2
▫AN924-6D	57D	2
▫AN924-6D	67	2
▫AN924-6D	67	2
▫AN924-6D	67	1
▫AN924-6D	67	1
▫AN924-6D	67	2

PART NUMBER	FIGURE & INDEX NO.	QTY. PER ART.
▫AN924-6D	67	2
▫AN924-8D	49	4
▫AN924-8D	49C	4
▫AN924-8D	49C	1
AN929-4	66 - 18	1
▫AN929-5	64A- 77	1
AN929-5D	64A- 19	1
AN931-B11-16	57	2
▫AN931-12-20	49	1
AN931-4-12	57B	2
AN931-4-12	57B	2
AN931-4-16	57B	1
AN931-4-7	16 - 18	29
AN931-4-7	16 - 25	1
AN931-4-7	57A	2
AN931-4-7	57B	2
AN931-4-7	57B	18
AN931-4-7	57C	2
AN931-4-7	63 -116	1
AN931-4-7	66	4
AN931-4-7	49C	4
AN931-5-12	54	4
▫AN931-5-12	64A- 55	1
AN931-6-10	48 - 48	2
AN931-6-10	48A- 48	2
▫AN931-8-13	63 - 20	1
AN931-8S13	48A- 29	1
AN931-8S13	48 - 29	1
AN931A4-7	57C	2
AN931A4-7	62	1
AN931B11-16	57A	2
AN931D1	57D	2
AN932-4D	36 - 64	2
AN935-10	48C- 22	4
AN935-10	57B	4
AN935-10	57G	12
▫AN935-10	61B	4
AN935-4L	63	4
▫AN935-416	8A	2
AN935-416	12C	4
AN935-416	12C	2
▫AN935-416	63	1
AN935-416L	49	4
AN935-416L	49C	2
▫AN935-516	17	3
▫AN935-516	17A	6
▫AN935-516	63	1
▫AN935-6	47C	2
▫AN935-6	63	2
AN935-6L	58	1
AN935-8	48B- 6	2
AN935-8	48B	2
AN935-8	48B	2
AN935-8	53	2
AN935-8	57 - 68	8
AN935-8L	57F	12
AN936-A10	57	4
AN936-B8	48B- 9	2
AN936-B8	48B	4
AN936-B8	48B	2
▫AN936A10	48A	6
AN936A10	58	1
▫AN936A10	58A	1
AN936A1016	13	4
AN936A416	57B	6
▫AN936A416	63	7
▫AN936A616	58A	1
AN936A8B	11B	3
AN936A816	58	AR
AN936A816	58	AR
AN936B416	12	4
▫AN936B416	13C	8
AN936B6	12A	2
AN936D8	29	4
AN938D6	57 - 88	2
AN941-1	49C- 42	2
AN960	13A	2
AN960	13B	2
AN960	47C	1
AN960-C516L	49D	1
▫AN960-10	8 - 24	2
▫AN960-10	8	2
AN960-10	10	4
AN960-10	10	1
AN960-10	10	1
AN960-10	10	1
AN960-10	10	1
AN960-10	10	2
AN960-10	10	1
AN960-10	10	1
AN960-10	10	1
AN960-10	10	AR
AN960-10	10	1
AN960-10	10	2
AN960-10	12A	2
AN960-10	12B	4
AN960-10	13	2
AN960-10	13	4
AN960-10	13A	4
AN960-10	13A	8
AN960-10	13B	8
▫AN960-10	13C	4
▫AN960-10	13C	4
▫AN960-10	13D	8
▫AN960-10	13E	8
AN960-10	14D	8
AN960-10	16	8
AN960-10	16	1
AN960-10	16	1
AN960-10	16	2
AN960-10	16	1
AN960-10	16	1
AN960-10	18	24
AN960-10	20	2
AN960-10	21	2
AN960-10	21A	4
AN960-10	22	8
AN960-10	22A	4
▫AN960-10	24 -	2
▫AN960-10	24	2

PART NUMBER	FIGURE & INDEX NO.	QTY. PER ART.
AN960-10	25	4
AN960-10	27	2
AN960-10	27	2
AN960-10	27	4
AN960-10	28	4
AN960-10	28	1
AN960-10	28	2
▫AN960-10	29	8
▫AN960-10	29	4
AN960-10	30	3
AN960-10	31	2
AN960-10	31	3
AN960-10	31	3
AN960-10	31	4
AN960-10	31	2
AN960-10	31	1
AN960-10	31	4
AN960-10	31	4
AN960-10	31	6
AN960-10	32	2
AN960-10	33	1
AN960-10	34	1
AN960-10	34	4
AN960-10	34	2
AN960-10	34	2
AN960-10	34	2
AN960-10	35	1
AN960-10	35	4
AN960-10	35	4
AN960-10	35	4
AN960-10	35	1
AN960-10	35	1
AN960-10	35	1
AN960-10	35	8
AN960-10	35	4
AN960-10	35	1
AN960-10	35	2
AN960-10	35	4
AN960-10	37D- 5	12
AN960-10	37E- 5	12
AN960-10	38	2
AN960-10	38	4
AN960-10	39	1
AN960-10	39	3
AN960-10	39	11
▫AN960-10	40	4
▫AN960-10	40	10
▫AN960-10	40	6
▫AN960-10	40	4
▫AN960-10	40	AR
AN960-10	41	1
▫AN960-10	41A	1
AN960-10	42 - 40	4
AN960-10	45	4
AN960-10	46	2
AN960-10	46	1
AN960-10	46	2
AN960-10	46	4
AN960-10	46	2
AN960-10	46	1
AN960-10	46	2
▫AN960-10	47C	2
▫AN960-10	47C	1
▫AN960-10	47D	1
AN960-10	48	8
AN960-10	48	4
AN960-10	48	1
AN960-10	48	2
AN960-10	48	2
AN960-10	48	2
AN960-10	48	3
▫AN960-10	48A	8
▫AN960-10	48A	4
▫AN960-10	48A	1
▫AN960-10	48A	2
▫AN960-10	48A	2
▫AN960-10	48A	3
▫AN960-10	48A	2
▫AN960-10	48A	6
AN960-10	48B- 14	3
▫AN960-10	49	2
▫AN960-10	49	6
▫AN960-10	49	4
▫AN960-10	49	8
▫AN960-10	49	8
▫AN960-10	49C	4
▫AN960-10	49C	8
▫AN960-10	51	8
AN960-10	52	2
AN960-10	52	4
AN960-10	52	4
AN960-10	52A	4
AN960-10	52A	4
AN960-10	52A	2
AN960-10	52A	2
AN960-10	53	4
AN960-10	54	4
AN960-10	54	6
AN960-10	54	1
AN960-10	54	4
AN960-10	54	4
AN960-10	54	1
AN960-10	54	1
AN960-10	56	8
AN960-10	56	4
AN960-10	56	4
AN960-10	57A	2
AN960-10	58	1
AN960-10	58	1
AN960-10	58	1
AN960-10	58	1
AN960-10	58	2
AN960-10	58	1
AN960-10	58	2
AN960-10	58	1
AN960-10	58	2
AN960-10	58	2
AN960-10	58	2
▫AN960-10	58A	4

PART NUMBER	FIGURE & INDEX NO.	QTY. PER ART.
¤AN960-10	58A	2
¤AN960-10	58A	1
¤AN960-10	58A	1
¤AN960-10	58A	1
¤AN960-10	58A	2
AN960-10	59	2
AN960-10	59	6
¤AN960-10	60	3
¤AN960-10	60	3
¤AN960-10	60	6
AN960-10	61	2
AN960-10	61A	2
¤AN960-10	61B	2
¤AN960-10	61C	3
¤AN960-10	63	2
¤AN960-10	63	4
¤AN960-10	64	4
¤AN960-10	64A	8
¤AN960-10	64A	6
¤AN960-10	64A	2
¤AN960-10	64A	4
¤AN960-10	64A	3
AN960-10	65	3
AN960-10	65	4
AN960-10	65	1
AN960-10	65	2
AN960-10	66	2
AN960-10	66	2
¤AN960-10	67	3
AN960-10	69	4
¤AN960-10L	8	3
¤AN960-10L	8	3
¤AN960-10L	8	4
¤AN960-10L	8A	6
¤AN960-10L	8A	2
¤AN960-10L	9	4
AN960-10L	10	2
AN960-10L	12	4
AN960-10L	12A	4
AN960-10L	12B	2
AN960-10L	12B	24
AN960-10L	12C	8
AN960-10L	12C	8
AN960-10L	13	1
¤AN960-10L	13C	1
¤AN960-10L	13D	4
¤AN960-10L	13D- 13	4
¤AN960-10L	13D	8
¤AN960-10L	13D	4
¤AN960-10L	13D	4
¤AN960-10L	13D	2
¤AN960-10L	13E	4
¤AN960-10L	13E	12
¤AN960-10L	13E	8
¤AN960-10L	13E	4
AN960-10L	14	1
AN960-10L	14B	2
AN960-10L	16	1
AN960-10L	16	4
AN960-10L	16	1
¤AN960-10L	17A	2
AN960-10L	20	4
AN960-10L	20	4
AN960-10L	21	2
AN960-10L	21	2
AN960-10L	21A	16
AN960-10L	23	4
AN960-10L	23	1
AN960-10L	23	8
AN960-10L	25A	4
AN960-10L	27	4
AN960-10L	28	2
AN960-10L	28	1
¤AN960-10L	29	8
AN960-10L	31	2
AN960-10L	31	1
AN960-10L	31	1
AN960-10L	31	2
AN960-10L	35	8
AN960-10L	36 - 87	2
AN960-10L	36A- 88	2
¤AN960-10L	37 - 69	2
AN960-10L	38	2
AN960-10L	39	3
¤AN960-10L	40	4
¤AN960-10L	40	6
AN960-10L	41	1
¤AN960-10L	41A	1
AN960-10L	46	2
¤AN960-10L	48A	1
AN960-10L	48B	2
¤AN960-10L	49	8
¤AN960-10L	49	4
¤AN960-10L	49C	12
AN960-10L	49D	1
AN960-10L	49D	8
AN960-10L	49D	1
AN960-10L	53	2
AN960-10L	53	4
AN960-10L	56	2
AN960-10L	56	2
AN960-10L	57I- 6	2
AN960-10L	58	6
AN960-10L	58	1
AN960-10L	58	1
AN960-10L	58	1
AN960-10L	58	2
¤AN960-10L	58A	1
¤AN960-10L	58A	1
¤AN960-10L	63	3
¤AN960-10L	63	2
¤AN960-10L	64	3
¤AN960-10L	64A	2
¤AN960-10L	64A	2
¤AN960-10L	67	1
AN960-1016	53	1
¤AN960-1016	68	2
AN960-1016L	23 - 12	4
AN960-1016L	25	4
¤AN960-1016L	63	1

PART NUMBER	FIGURE & INDEX NO.	QTY. PER ART.
¤AN960-106	63 - 33A	1
¤AN960-1216	49C	4
¤AN960-1416	62A	2
AN960-1416	69	2
AN960-3	43 - 13	1
AN960-4	12	20
AN960-4	13	2
AN960-4	53A	2
AN960-4	53A	4
AN960-4	58	2
AN960-4	58	2
AN960-4	58	6
AN960-4	58	4
AN960-4	58	2
¤AN960-4	58A	4
¤AN960-4	64	3
AN960-4	71	2
AN960-4L	53	4
AN960-4L	53	4
¤AN960-4L	63	4
¤AN960-4L	68	2
AN960-4L	69	1
AN960-4L	69	2
AN960-416	12	2
AN960-416	12	8
AN960-416	12A	4
AN960-416	13	3
AN960-416	13A	8
AN960-416	13A	8
AN960-416	13A	4
AN960-416	13B	6
¤AN960-416	13C	4
AN960-416	20	1
AN960-416	21	1
AN960-416	21A	2
AN960-416	22	2
AN960-416	22A	2
AN960-416	26	4
AN960-416	27	12
AN960-416	28	12
¤AN960-416	29	2
AN960-416	31	1
AN960-416	31	1
AN960-416	31	1
AN960-416	31	1
AN960-416	31	2
AN960-416	31	1
AN960-416	31	2
AN960-416	31	2
AN960-416	32	1
AN960-416	32	1
AN960-416	32	2
AN960-416	32	1
AN960-416	33	2
AN960-416	33	2
AN960-416	33	2
AN960-416	35	2
AN960-416	36	2
AN960-416	36	24
AN960-416	36	4
AN960-416	36A	2
AN960-416	36A	24
AN960-416	36A	4
¤AN960-416	37	2
¤AN960-416	37	12
AN960-416	38	4
AN960-416	38	2
AN960-416	38	2
AN960-416	39	4
¤AN960-416	40	24
AN960-416	41 - 15	1
AN960-416	41	2
AN960-416	41	1
AN960-416	41	2
¤AN960-416	41A	3
¤AN960-416	41A	2
¤AN960-416	41A	1
¤AN960-416	41A	2
AN960-416	41B- 6	6
¤AN960-416	41C- 3	6
¤AN960-416	44	3
¤AN960-416	44	2
¤AN960-416	44	2
AN960-416	47C	1
¤AN960-416	49C	24
AN960-416	53	4
AN960-416	53	4
AN960-416	53	2
AN960-416	53	8
AN960-416	54	2
AN960-416	57	4
AN960-416	57A	4
¤AN960-416	57D	4
AN960-416	58	1
¤AN960-416	58A	1
¤AN960-416	58A	2
¤AN960-416	58A	1
AN960-416	59	3
AN960-416	59	1
¤AN960-416	63	3
¤AN960-416	63	1
¤AN960-416	63	6
¤AN960-416	64	3
AN960-416	69	4
AN960-416	69	4
¤AN960-416L	8	2
¤AN960-416L	8	2
¤AN960-416L	8A	4
¤AN960-416L	8A	2
AN960-416L	12	8
AN960-416L	12	2
AN960-416L	12A	2
AN960-416L	12B	2
AN960-416L	13A	8
AN960-416L	13B	4
¤AN960-416L	13C	2
¤AN960-416L	13D- 11	4
¤AN960-416L	13E	4
AN960-416L	14	4

PART NUMBER	FIGURE & INDEX NO.	QTY. PER ART.
AN960-416L	23	4
AN960-416L	26	4
AN960-416L	27	18
AN960-416L	28	12
¤AN960-416L	29	4
AN960-416L	31	2
AN960-416L	31	2
AN960-416L	31	4
AN960-416L	34	8
AN960-416L	34	2
AN960-416L	34	2
¤AN960-416L	37I	4
¤AN960-416L	37I	8
AN960-416L	38	2
AN960-416L	38	2
AN960-416L	38	2
AN960-416L	41	1
AN960-416L	41 - 60	1
¤AN960-416L	41A	2
¤AN960-416L	44	3
¤AN960-416L	44	4
¤AN960-416L	47C	1
AN960-416L	49D	1
AN960-416L	54	2
AN960-416L	54 -	1
AN960-416L	57	48
AN960-416L	57	48
AN960-416L	57A	48
¤AN960-416L	57D	48
AN960-416L	65	AR
AN960-416L	66	AR
AN960-516	13	49
AN960-516	13A	3
AN960-516	31	8
AN960-516	36	2
AN960-516	36A	2
¤AN960-516	37	2
¤AN960-516	37	8
¤AN960-516	37A- 25	24
¤AN960-516	37B- 3	6
¤AN960-516	37I	12
AN960-516	38	2
AN960-516	39	1
AN960-516	39	1
AN960-516	42	1
AN960-516	53	2
AN960-516	53	2
AN960-516	53	4
¤AN960-516	58A	1
¤AN960-516	62A	2
¤AN960-516	62A	4
¤AN960-516	63	5
¤AN960-516L	37A- 10	24
¤AN960-516L	37G- 18	2
AN960-516L	38	2
AN960-516L	42	2
¤AN960-516L	44	2
¤AN960-516L	51	AR
¤AN960-516L	62A	2
AN960-6	10	2
AN960-6	10	1
AN960-6	10	1
AN960-6	13B	2
¤AN960-6	13C	4
AN960-6	14	22
AN960-6	14	4
AN960-6	14	3
AN960-6	14	3
AN960-6	14A	3
AN960-6	14A	22
AN960-6	14B	16
AN960-6	15	4
AN960-6	15	4
¤AN960-6	17A	1
AN960-6	22A	8
AN960-6	31	2
AN960-6	46	1
¤AN960-6	47C	8
¤AN960-6	47C	10
AN960-6	48	2
¤AN960-6	48A	2
¤AN960-6	49	6
¤AN960-6	49	3
¤AN960-6	49C	18
AN960-6	53	4
AN960-6	53	4
AN960-6	54	4
AN960-6	58	2
AN960-6	58	1
AN960-6	58	2
AN960-6	58	4
¤AN960-6	58A	1
¤AN960-6	58A	2
¤AN960-6	60	4
¤AN960-6	60	1
¤AN960-6	60	AR
¤AN960-6	61C	1
¤AN960-6	63	4
¤AN960-6	63	1
¤AN960-6	63	4
¤AN960-6	63	8
¤AN960-6	63	4
¤AN960-6	63	1
¤AN960-6	63	2
¤AN960-6	63	20
¤AN960-6	63	4
¤AN960-6L	6	2
¤AN960-6L	6	4
¤AN960-6L	6	8
AN960-6L	15	6
¤AN960-6L	63	1
¤AN960-6L	64	2
¤AN960-6L	64	4
¤AN960-6L	64	4
¤AN960-6L	68	2
AN960-616	12A	4
AN960-616	12A	2
AN960-616	13A	8
¤AN960-616	13C- 43	2
AN960-616	34	6

PART NUMBER	FIGURE & INDEX NO.	QTY. PER ART.
AN960-616	34	4
¤AN960-616	37G- 23	8
AN960-616	38	6
AN960-616	38	2
AN960-616	41	2
¤AN960-616	41A	2
AN960-616	42	1
AN960-616	42	8
AN960-616	42	4
¤AN960-616	49	8
¤AN960-616	49C	8
AN960-616	57 - 76	2
AN960-616L	12C	2
AN960-616L	13B	2
¤AN960-616L	13C	2
¤AN960-616L	13C	2
AN960-616L	25 - 11	1
AN960-616L	25A- 26	1
AN960-616L	34	6
AN960-616L	42	2
AN960-616L	42 - 5	1
AN960-616L	42 - 25	1
AN960-616L	42	2
¤AN960-616L	44	1
¤AN960-616L	57D	2
¤AN960-616L	57D	2
AN960-716	36	1
AN960-716	36A	2
AN960-716	39	1
AN960-716	42	2
AN960-716	46	2
AN960-716	46	1
AN960-716	46	2
AN960-716	46	2
AN960-716	46	3
AN960-716	46	2
AN960-716	46	2
AN960-716	46	1
¤AN960-716	49	8
¤AN960-716	49C	8
¤AN960-716	62	1
¤AN960-716	62	6
¤AN960-716	62	2
¤AN960-716	62	4
¤AN960-716	62A	1
¤AN960-716	62A	1
¤AN960-716	62A	2
¤AN960-716	62A	4
¤AN960-716	62A	2
¤AN960-716	62A	2
¤AN960-716	62A	4
¤AN960-716	62A	2
¤AN960-716	62A	4
¤AN960-716	62A	2
¤AN960-716	62A	1
¤AN960-716	62A	1
AN960-716	65	2
AN960-716	65	2
AN960-716	65	2
AN960-716	65	2
AN960-716	65	2
AN960-716	66	2
AN960-716	66	2
AN960-716	66	2
AN960-716	66	2
¤AN960-716	67	1
AN960-716L	42 - 8	1
¤AN960-8	7	6
¤AN960-8	11B	6
AN960-8	14B	5
AN960-8	16	2
¤AN960-8	17A	2
AN960-8	1B	62
AN960-8	18	44
AN960-8	18	4
AN960-8	30	4
AN960-8	30	1
AN960-8	31	4
AN960-8	33	1
AN960-8	34	1
AN960-8	34	4
AN960-8	38	4
AN960-8	45	8
AN960-8	46	2
AN960-8	46	1
AN960-8	46	4
AN960-8	46	1
AN960-8	48	6
AN960-8	48	6
AN960-8	48	3
AN960-8	48	2
AN960-8	48	1
AN960-8	48	4
AN960-8	48	4
AN960-8	48	6
¤AN960-8	48A	6
¤AN960-8	48A	6
¤AN960-8	48A	3
¤AN960-8	48A	4
¤AN960-8	48A	4
¤AN960-8	48A	6
AN960-8	48B	2
AN960-8	48B- 18	1
¤AN960-8	49	3
¤AN960-8	49	4
¤AN960-8	49	8
¤AN960-8	49	2
¤AN960-8	49	2
¤AN960-8	49	2
¤AN960-8	49C	2
¤AN960-8	49C	14
¤AN960-8	50	20
AN960-8	52A	4
AN960-8	53	16
AN960-8	53	8
AN960-8	53	8
AN960-8	53	14
AN960-8	54	4
AN960-8	57A	2
¤AN960-8	57D	2

PART NUMBER	FIGURE & INDEX NO.	QTY. PER ART.
AN960-8	58	2
AN960-8	58	6
AN960-8	58	2
¤AN960-8	58A	6
¤AN960-8	58A	2
AN960-8	58A	1
¤AN960-8	58A	2
¤AN960-8	61C	6
¤AN960-8	63	2
¤AN960-8	63	4
AN960-8	66	10
AN960-8	66	1
AN960-8L	10	3
AN960-8L	10	2
¤AN960-8L	11	1
¤AN960-8L	11	1
AN960-8L	30	2
AN960-8L	48B	2
¤AN960-8L	63	8
¤AN960-816	37 - 4	4
¤AN960-916	57D	2
¤AN960-916	57D	2
¤AN960-916	67	2
¤AN960-916	67	2
¤AN960A6	37	2
AN960A816L	36	2
AN960A816L	36A	2
AN960A816L	37	2
AN960B1216	49	4
AN960B8	14	5
AN960B8	61C	4
AN960B8	61C	4
AN960C10L	13A	8
AN960C10L	13A	4
AN960C516L	13A	4
AN960D10	27	8
AN960D10	32	6
AN960D10	36	1
AN960D10	36	2
AN960D10	36	4
AN960D10	36A	1
AN960D10	36A	2
AN960D10	36A	4
¤AN960D10	37	2
¤AN960D10	37	1
¤AN960D10	37	2
AN960D10	56	4
¤AN960D10	63	2
AN960D10L	20	1
AN960D10L	20	2
AN960D10L	42 - 24	1
AN960D10L	56	4
AN960D10L	58	4
AN960D4	8	1
AN960D4	57	4
AN960D4L	48	3
¤AN960D416	49C	2
AN960D416L	38	2
AN960D416L	48 - 71	AR
AN960D516	39	2
AN960D6	36	2
AN960D6	36A	2
AN960D6L	53A	4
¤AN960D716	37	B
¤AN960D716	37 - 55	6
AN960D716	46	2
AN960D716L	37	16
¤AN960D8	17	3
¤AN960D8	29	4
¤AN960D8	49	2
¤AN960D8	49C	6
AN960D8	50	2
AN960D8	50	2
¤AN960D8	63	4
AN960D916	57D	2
AN960D916	67	1
AN960D916	67	1
AN960D916	67	2
AN960D916	67	2
¤AN960PD10L	37A- 5	8
AN960PD6L	20	1
¤AN960PD6L	63	AR
AN966L4	31 - 33	2
¤AN970-3	49	12
¤AN970-3	49	8
¤AN970-3	49	8
¤AN970-3	49A	4
¤AN970-3	49C	12
¤AN970-3	49C	4
AN975-3	58	1
¤AN975-3	58A	1
¤AQ6Q	63 - 58	2
AR4	31 - 46	4
¤A10	62B	3
A1059-014-3	57 - 17	12
¤A109-014-1	6	4
¤A109-014-1	6	8
A1170-2	35 - 19	2
A1170-8	35	1
A1170-8	35 - 44	2
¤A11B1-2-1	47D	8
A1181-2-1	47D	8
A1181-2-1	47D	8
A1181-2-1	47D	8
¤A1327	7 -	1
A1597-017-1	63	4
A1778-8Z1	47C	4
A1778-8Z1	47C	16
A1784-6Z	12A	2
A1784-6Z-1	12B	2
A1784-6Z-1	14A- 34	2
¤A1784-6Z-3	8 - 49	4
A1784-6Z-3	14	1
A1784-6Z-3	14A	1
A1784-6Z-3	14A	1
A1784-6Z1	12A	2
A1784-6Z1	12A	5
A1784-6Z1	14 - 8	2
A1784-6Z1	14A- 10	1
A1784-6Z1	14A- 32	1

PART NUMBER	FIGURE & INDEX NO.	QTY. PER ART.
A1785-6Z-1	14A	1
¤A1785-6Z-1	14C	1
¤A1793-6Z3	64A	3
¤A2064-1683	17	1
¤A2064-1683	63 - 98A	1
A225	35 - 7	2
A2781-172	48B- 20	1
A2981A-4-27	16 - 21	2
A3005	47C- 60	1
A3005	63 - 81	1
A321	48 - 82	1
¤A321	48A- 88	2
A3551	47D- 20	1
A3552	47D- 17	1
A3553	47D- 21	1
A3554-3	47D- 18	1
A3657A	47D- 19	1
¤A39070	37I- 30	2
¤A4-30	63 -108A	1
A53T	58 -131	1
A565B632H3	58A	1
A565B632H3	58A	1
¤A6	62B	2
¤A6	70	2
A6	71 - 14	2
A6	71	4
A6	71	2
A6052-6Z1	47C	6
A6194-6Z1	61C	2
A6195-8Z-3	58A	2
A6500-6Z1	58A	2
A6500-6Z1	61C	9
A6795B	60 - 40	1
A6914-1024-1	22 - 8	8
¤A779	44 - 8	1
¤A8	62B	2
A8	69	4
A8	71 - 12	4
A872-012	58A	2
A872-012-1	14A- 6	3
A872-012-1	14A- 15	3
A872-012-1	14A- 38	3
A872-012-1	14A- 44	3
A8944-632-24A	66	4
¤A8970-1-327	57D	2
¤A8970-1-327	58A- 80	1
A8970-1-327	61 - 21	2
A8970-1-327	61	REF
¤A8970-1-327	61B- 32	36
¤A8970-1-327	61C- 72	28
¤A8970-1-327	64 - 17	1
¤A8970-1-327	64A- 37	1
¤A8970-1-327	67 - 87	1
A8970-2-327	61	4
¤A8970-2-327	61C- 70	4
A8970B-1-327	58A	1
A8970B-1-327	61C	1
A8970B1-327	57D	2
A8970B1-327	61C- 87	1
A8970B2-327	61C	34
A8975-1-327	61 - 22	2
¤A8975-1-327	61C- 71	2
A905	57B- 24	2
¤A905	57D-100	2
B-1322	49K- 29	2
B-31571-1	61 - 35	2
B-40-1	42 - 43	4
B-853	49K- 51	2
B-854	49K- 40	2
B-855A	49K- 53	2
B-953	49K- 52	2
B-984	49K- 31	2
BC22062	18 - 72	4
BC22062	22 - 12	REF
BC22062	22A- 33	4
¤BJ1000AH4T	49 - 67	2
¤BJ1000AH4T	49C- 46	2
BOW95-516	64A	1
BS48199	48 - 63	1
BS48199	48A- 65	1
¤BZ-3YT	63	1
BZ3AT	63	1
B148	59 - 3	2
¤B2120-501	47C- 25	1
¤B2120-501	47C- 51	2
¤B2155-501	47C- 52	2
¤B3307-1	63 - 1	1
¤B3307-2	63 - 3	1
¤B3307-3	63 - 12	1
¤B3307-4	63 - 14	1
¤B3550-1	47D	1
B36	25A- 34	2
B41C74	48 - 28	1
¤B41C74	48A- 28	1
B55	27 - 5	2
B55	27 - 10	2
B55	28 - 6	1
B55	28 - 8	1
¤B78X	60 - 3	1
¤B78X	60	1
B88X	39 - 28	2
C-1301	49K- 7	4
C-1314	49K- 25	2
C-852-1	49K- 34	2
C-852-6	49K	2
C-885	49K- 3	2
C-888-4	49K- 2	2
¤CB2305A	61C- 62	8
¤CB2315A	61C- 64	1
¤CB2330A	61C- 61	2
¤CB2330A	61C- 63	1
¤CB2350A	61C	2
CB3105	66	1
¤CB3105B	61B- 44	5
¤CB3105C	61C- 59	4
¤CB3110C	17A- 28	1
¤CB3110C	61C- 60	1
CB3115	61B- 42	2
CB3120	61B- 47	1
¤CB3120C	61C- 58	1

PART NUMBER	FIGURE & INDEX NO.	QTY. PER ART.
CCA3400	57 -130	2
CCA4850	57 - 38	4
CCA4850	57 - 95	2
CCA4850	57 -120	2
CCA4850	57 -129	2
CCA4850	57A- 18	2
CCA4850	57A- 26	2
CCA4850	57C- 24	2
¤CCA4850	57D- 21	2
¤CCA4850	57D- 39	2
CLU1021	63 - 61A	2
¤COB71989-1	63 - 31L	1
¤COB71989-1	63 - 31M	1
COMM	12A	2
COMM	12A	5
COMM	12A	2
COMM	13A	8
COMM	14	13
CP6P	63 - 50	2
CS4000W/265-4	13D- 51	2
CS40000W/265-4	13E- 28	2
C2400L4P1A	11B- 4	1
¤C2400L4VF95	11 - 9	1
¤C2400L4VT95	11	1
¤C41006Y2-1	64A	1
C4189	27 - 19	4
C4189	31	2
C4189	31 - 76	2
C4189	32	2
C4189	33 - 25	2
C85A82	48C- 2	1
D-83A28	48 - 15	1
D-83A28	48C-	1
¤DY1399-4	9A- 4	1
¤DY1399-4	9A	2
D165-100-2	58A	1
¤D611A	13D- 52	2
¤D611A	13E- 29	2
D6752-2-20	58 -136L	2
D6752-2-30	58	2
D6752-2-50	58	2
¤D7270-6-10	63	1
D7270-6-15	61 - 16	2
D7270-6-15	61A- 41	2
D7270-6-20	61 - 17	1
D7270-6-20	61A- 42	1
D7270-6-5	61 - 15	6
D7270-6-5	61A- 40	6
D7270-6-5	65 - 37	1
D7271-1-5	58 -135	1
¤D83A28	48A- 15	1
EB144	18 - 9L	2
ED99A30	48C	1
EF5	7	1
ET4738	69 - 78	1
¤EX811-61-1	68 - 58	1
F-6600-CX2	10 - 20	1
FC3570-4	57A- 45	2
FC3570-4	57D- 91	2
FC3570-4	57E	2
FC3570-5	57A- 44	2
FC3570-5	57D- 90	2
FC3570-5	57E-	2
FD-1643	13A- 43	2
FDA-1645	13A- 40	2
FDA1645	12A- 23	1
FDC-2500-37-2	12B	1
FDC-2700-105	12B	1
FDC2700-105	13C- 33	4
FD161	12A- 21	1
FD161	12A- 24	1
FD161	13A- 38	2
FD161	13A- 41	2
FD1643	12A- 26	1
FF-520-15	57D-102	2
¤FR2 1/2	7 - 21	1
F3M14	35 - 13	4
F312	58A- 17	2
F4-30	18 - 64	22
F4-30	18 - 66	26
F6100X2	10	1
¤F6605DX2	9 - 8	1
¤F6608DX2	9	1
¤F6608EX2	9	1
¤F6608EX2	9A- 8	1
F6747RX2	8 - 35	1
G-199-105	57D-	2
G-371-01N-1B	61	1
G-450-1	49F- 1	2
G-450-10	49F- 4	2
G-450-11	49F- 11	2
G-450-12	49F- 12	2
G-450-13	49F- 13	2
G-450-14	49F	2
G-450-16	49F	2
G-450-17	49F- 14	8
G-450-18	49F- 15	12
G-450-19	49F- 16	2
G-450-2	49F- 5	2
G-450-20	49F- 17	2
G-450-21	49F	4
G-450-21-1	49F	2
G-450-22	49F	2
G-450-23	49F- 18	2
G-450-24	49F- 20	2
G-450-3	49F- 7	2
G-450-4	49F- 2	2
G-450-5	49F- 8	8
G-450-6	49F- 6	2
G-450-7	49F- 9	2
G-450-8	49F- 10	2
G-450-9	49F- 3	2
G-455	49F-	2
G-455L	49F	2
GB59	58 - 15	1
GG5642808	57D	1
GG5642809	57D	1
¤GT4738	68 - 51	1
¤GYS5-49	37B- 4	6
G199-105	57H	2

PART NUMBER	FIGURE & INDEX NO.	QTY. PER ART.
G199-25	57 -115	2
G199-25	57H-	2
G199-6	57	2
G199-65	57	2
G199-65	57H	2
G199-85	57A- 16	2
G199-85	57H	2
G36A47	48C	1
G371-01-1B	61	1
¤G4025	49 - 55	2
G4026	49	2
G445L	49 - 35	2
¤G455PM	49 - 35	2
¤G455PM	49A- 3	2
¤G455PM	49C- 47	2
G714127	48 - 72	1
¤G714127	48A- 72	1
¤G7740A9-24	63 - 99	1
HC-92ZK-2B/	49K-	2
8447-12A	49K	
¤HC92WK2B/	49 - 89A	2
W8447-12A	49	
¤HC92WK2B/	49C- 17	2
W8447-12A	49C	
HE-1114	57F- 2	2
HE-1114	57G- 2	2
HE-1115	57F- 15	2
HE-1116	57F- 4	2
HE-1116	57G- 4	2
HE-1117	57F- 8	2
HE-1153-2	57F- 16	8
HE-1153-2	57G- 18	4
HE-1155	57F	2
HE-1155-10	57G- 11	2
HE-1156	57F- 12	2
HE-1526-3	57I- 8	2
HE-1526-4	57I- 7	2
HE-1528-6	57I- 3	2
HE-1530-5	57I- 2	2
HE-1531	57I- 9	2
HE-1568-2	57I- 1	2
HE-1650	57G- 8	2
HE-1661	57G- 10	2
HE-184	57F- 5	2
HE-189	57F- 7	4
HE-189	57G- 7	4
HE-191	57F- 20	12
HE-191	57G- 12	6
HE-192	57F- 18	12
HE-192	57G- 13	6
HE-193	57F- 19	12
HE-193	57G- 14	6
HE-194	57G- 5	2
¤HE-760-5	57D- 34	2
HE-760-5	57I-	2
HE-765-1	57D- 8	1
HE-765-1	57G-	1
HE-765-2	57D- 9	1
HE-765-2	57G	1
HE-825-1	57B	1
HE-825-1	57F	1
HE-825-2	57B- 18	1
HE-825-2	57F-	1
HE1097	56 - 9A	2
HE636	10 - 3	1
HE721-3	56 - 8	2
HF3	53	2
HL-200	47A- 6	1
HL-214	47B- 4	4
HL-338	47A- 9	1
HL-5	47B- 2	4
HL-837	47B- 5	2
HLUH	58 - 19	1
HLUH	58A- 2	1
HML4	31 - 42	4
HMXL6FG	42 - 6	1
HMX5FG	42 - 3	1
HMX5FG	42 - 26	1
HM4	31 - 41	4
¤HM4U	40 - 22	4
¤HM4U	44 - 14	1
HM6	34 - 14	4
HM6	38 - 13	2
¤H10-06	64	4
¤H10-06	64	4
H10-08	53	8
H10-08	53	8
H5000-040-051	51 - 24	6
¤H5000-2-032-040	51	6
¤H5000-2-032-040	51 - 27	2
H9FF06	69 - 23	2
H9W1019-156	69 - 26	2
H9W334-134	69 - 25	2
H9W334-231	69 - 18	2
IE1184	65 - 2	1
ID-360-B1B	49C	2
IS-1481B	39 - 36	1
IV-40-550	48 - 8	1
¤IV40-550	48A- 8	1
IO-360B1A	49A	2
I189712	66	1
I189712-2	66 - 9	1
I189712-3	66 - 8	1
¤JV-20	58A- 31	2
JV20	58 -158	2
JV20	71 - 3	2
¤J7402-1	49 -106	8
¤J7402-1	49C- 1	8
KP10A	60 - 4	2
KP10A	60	4
K1000-832	53	6
K102B4-5	48B- 17	1
K129-4	48B- 32	1
K21B	39 - 22	2
K2404-1/8	57 - 82	2
K271-200SSL	48B- 29	1
K271-38SSL	48B- 33	1
K323-4-6	48B- 43	1
¤K9000S1A	67 - 65	1
¤LBA27492	63 - 98	1

PART NUMBER	FIGURE & INDEX NO.	QTY. PER ART.
¤LFA2850	63	1
¤LM-67010XL	41C- 6	1
¤LM-67010XL	41C- 9	1
¤LM-67048XL	41C- 1	2
¤LPA27630	63 - 97	1
¤LP4-17AM	37I- 12	8
¤LS4	44 - 24	1
¤LS4	44 - 31	1
LS6	38 - 6	2
¤LU27054	63	1
¤LWA29455	63	1
¤L18336-1	47D- 14	1
¤L18366-1	47D- 29	2
¤L18366-5	60 - 36	1
M-4861H-1A	48 - 3	1
M-4861H-1A	48B-	1
¤MA4-5	49 - 76	2
MC2711	36 - 71	1
MC2711	36A- 73	1
¤MC2711	37 - 74	1
¤MD46-15	44 - 48	1
MF1000-632	47D	8
¤MI986	61C- 69	1
¤MI990	61C- 68	1
MK1000-1032	13B	4
MK2000-08	47D	4
MK2000-1032	13B	8
¤MODEL 106B	49C-100	2
MS100009	49E- 46	2
¤MS15001-2	38 - 23B	2
¤MS15001-4	44 - 26	1
¤MS15001-4	44 - 37	1
MS15002-1	36 - 45	4
MS15002-1	36A- 44	4
¤MS15002-1	37 - 39	4
¤MS15002-1	41 - 10	4
¤MS15002-1	41 - 46	4
¤MS15002-1	41A- 16	2
¤MS15002-1	41A- 25	2
¤MS15002-1	41A- 50	4
¤MS15002-1	41A	4
MS15002-3	36 - 13A	4
MS15002-3	36A- 12A	4
¤MS171498	13D	4
¤MS171498	13D- 44	1
¤MS171498	13E	4
¤MS171498	13E- 23	2
¤MS171499	13D- 33	2
MS171507	13D- 39	1
¤MS171534	13D- 30	1
¤MS171534	13E- 17	4
¤MS171539	13D- 31	1
¤MS171564	13D- 20	2
MS171684	13D- 5	4
MS171684	13E- 5	4
MS20002-5	37B	6
¤MS20002C7	44	1
MS20004-12/M/	26	4
MS20004-6/M/	27	8
MS20004-6/M/	27 - 1A	16
MS20073-04-06	65	AR
MS20073-04-06	66	AR
MS20074-03-10	48B- 13	3
¤MS20219-2	58A-118	2
MS20270-B8	57 - 75	4
MS20270B8	57B- 22	2
¤MS20364-1032	8 - 25	2
MS20364-1032	10	12
MS20364-1032	10	1
MS20364-1032	10	1
MS20364-1032	12A	4
MS20364-1032	12A	4
¤MS20364-1032	13D	8
¤MS20364-1032	13E	8
¤MS20364-1032	40	2
¤MS20364-1032	49	4
¤MS20364-1032	49	4
¤MS20364-1032	58A	1
¤MS20364-1032	58A	1
¤MS20364-1032	60	3
¤MS20364-1032	60	1
MS20364-428	12A	2
MS20364-428	13A	4
¤MS20364-428	41A	1
¤MS20364-428	44	1
¤MS20364-428	44	2
MS20364-624	41A	2
¤MS20364-632	6	2
¤MS20364-632	6	4
¤MS20364-632	29	2
¤MS20364-632	60	4
MS20364-632	60	1
¤MS20364-720	37	8
¤MS20364-832	11	12
¤MS20364-832	49	3
¤MS20364-832	49	4
¤MS20364-832	49C	14
MS20364-832C	48B- 2	2
MS20365-B832	14	3
¤MS20365-1032	8	3
MS20365-1032	8	3
¤MS20365-1032	8 - 37	2
¤MS20365-1032	8	4
¤MS20365-1032	8A	6
¤MS20365-1032	9	4
MS20365-1032	12A	2
MS20365-1032	12A	2
MS20365-1032	12B	4
MS20365-1032	13A	4
MS20365-1032	13A	4
MS20365-1032	13A	2
MS20365-1032	13A	4
¤MS20365-1032	13C	4
¤MS20365-1032	13D- 17	2
¤MS20365-1032	13D- 24	8
¤MS20365-1032	13D- 26	4
¤MS20365-1032	13D	4
¤MS20365-1032	13D	8
¤MS20365-1032	13E- 14	6
¤MS20365-1032	13E	8

PART NUMBER	FIGURE & INDEX NO.	QTY. PER ART.
▫MS20365-1032	13E	4
▫MS20365-1032	13E	8
▫MS20365-1032	17A	2
MS20365-1032	18	24
▫MS20365-1032	24	2
▫MS20365-1032	24	2
▫MS20365-1032	29	8
▫MS20365-1032	37	1
▫MS20365-1032	40	4
▫MS20365-1032	40	10
▫MS20365-1032	40	6
▫MS20365-1032	40	4
▫MS20365-1032	41A	1
▫MS20365-1032	41A	3
▫MS20365-1032	47C	1
▫MS20365-1032	47D	AR
▫MS20365-1032	47D	1
▫MS20365-1032	47D	1
▫MS20365-1032	48A- 10	5
▫MS20365-1032	48A	2
▫MS20365-1032	48A	3
▫MS20365-1032	48A	1
▫MS20365-1032	48A	6
▫MS20365-1032	49	8
▫MS20365-1032	49	4
▫MS20365-1032	49	8
▫MS20365-1032	49A	4
▫MS20365-1032	49C	4
▫MS20365-1032	51	8
▫MS20365-1032	51	24
MS20365-1032	52A	4
MS20365-1032	52A	2
MS20365-1032	53	4
MS20365-1032	54	1
MS20365-1032	54	1
MS20365-1032	58A	2
▫MS20365-1032	58A	4
▫MS20365-1032	58A	2
▫MS20365-1032	58A	1
▫MS20365-1032	58A	1
▫MS20365-1032	58A	1
MS20365-1032	60	3
▫MS20365-1032	61C	3
▫MS20365-1032	63	2
▫MS20365-1032	63	2
▫MS20365-1032	63	4
▫MS20365-1032	64	3
▫MS20365-1032	64	3
▫MS20365-1032	64A	17
▫MS20365-1032	64A	2
▫MS20365-1032	64A	6
▫MS20365-1032	64A	4
▫MS20365-1032	64A	4
▫MS20365-1032	64A	2
▫MS20365-1032	64A	2
MS20365-1032	65	2
MS20365-1032	65	2
MS20365-1032	66	2
▫MS20365-1032	67	3
▫MS20365-1032	67	1
MS20365-1032	69	4
MS20365-1032	70	4
MS20365-1032C	53	4
▫MS20365-428	8	2
▫MS20365-428	8A	2
MS20365-428	12A	2
MS20365-428	13A	4
MS20365-428	13A	4
MS20365-428	13A	4
▫MS20365-428	13C	4
▫MS20365-428	13D	1
MS20365-428	13E	2
▫MS20365-428	29	2
▫MS20365-428	37 - 20	4
▫MS20365-428	37	2
▫MS20365-428	37	12
▫MS20365-428	37I	4
▫MS20365-428	40	8
▫MS20365-428	41A	1
▫MS20365-428	41A	1
▫MS20365-428	44	1
▫MS20365-428	44	1
▫MS20365-428	49C	24
▫MS20365-428	51	8
▫MS20365-428	51	8
MS20365-428	54	1
▫MS20365-428	57D	4
▫MS20365-428	58A	2
▫MS20365-428	58A	1
▫MS20365-428	61C	2
MS20365-428	69	4
▫MS20365-440	11	2
▫MS20365-440	47C	2
▫MS20365-440	51	34
▫MS20365-440	58A	4
▫MS20365-440	68	2
MS20365-440	69	1
MS20365-440	69	2
MS20365-440	71	2
MS20365-524	13A	2
▫MS20365-524	37 - 10	2
▫MS20365-524	37	8
▫MS20365-524	37A- 9	12
▫MS20365-524	37I	12
MS20365-524	53	2
MS20365-524	53	2
▫MS20365-524	58A	1
MS20365-524C	53 - 30	2
MS20365-6	15	4
▫MS20365-624	49	8
▫MS20365-624	49C	8
▫MS20365-632	6	8
▫MS20365-632	11	12
▫MS20365-632	11	56
▫MS20365-632	37	2
▫MS20365-632	47C	8
▫MS20365-632	47C	1
▫MS20365-632	47D	1
▫MS20365-632	47D	3
▫MS20365-632	48A	2

PART NUMBER	FIGURE & INDEX NO.	QTY. PER ART.
▫MS20365-632	49C	18
▫MS20365-632	58A	1
▫MS20365-632	58A	2
▫MS20365-632	61C	1
▫MS20365-632	63	1
▫MS20365-632	63	1
▫MS20365-632	63	2
▫MS20365-632	63	4
▫MS20365-632	63	1
▫MS20365-632	63	2
▫MS20365-632	63	20
▫MS20365-632	63	4
▫MS20365-632	63	1
▫MS20365-720/M/	49	8
▫MS20365-720/M/	49C	8
▫MS20365-832	9A	2
▫MS20365-832	11B	6
▫MS20365-832	13C	1
MS20365-832	45	8
▫MS20365-832	47D	4
▫MS20365-832	48A	6
▫MS20365-832	48A	6
▫MS20365-832	48A	6
▫MS20365-832	49	8
▫MS20365-832	49	2
▫MS20365-832	49	2
▫MS20365-832	49	2
▫MS20365-832	49	2
▫MS20365-832	49C	2
▫MS20365-832	49C	6
▫MS20365-832	50	20
▫MS20365-832	51	20
▫MS20365-832	51	20
▫MS20365-832	57D	2
▫MS20365-832	58A	6
▫MS20365-832	58A	2
▫MS20365-832	58A	1
▫MS20365-832	61C	6
▫MS20365-832	61C	8
▫MS20365-832	62	10
▫MS20365-832	62A	10
▫MS20365-832	63	1
▫MS20365-832	63	2
▫MS20365-832	63	2
▫MS20365-832	63	1
▫MS20365-832	63	5
MS20365-832	66	10
MS20365-832	66	1
MS20365B832	61C	4
MS20365B832	61C	4
MS20392-1-11	13C- 21	4
MS20392-1-21	32	1
MS20392-1-21	37 - 30	2
MS20392-1-37	32 - 21	3
MS20392-1-37	42 - 15	1
MS20392-1C25	44 - 11	1
MS20392-2-37	10 - 15	5
MS20392-2-37	12C- 2	4
MS20392-2C39	8A- 7	2
MS20392-5-53	13B- 17	2
MS20392-5-53	13C- 24	2
MS20392-5-69	12C- 8	2
▫MS20392-5-69	13C- 7	2
▫MS20426DD6-6	37A- 31	10
▫MS20520-1032	8 - 23	1
MS20659-5	39	1
MS20813-1	36A	2
MS20813-1	37 - 44	2
MS20813-1	41A- 43	1
MS20822-10D	69 - 37	2
MS20822-4D	57D- 37	2
MS20822-5D	64 - 21	1
MS20822-5D	64 - 23	1
MS20822-8	68	1
MS20823-5D	64A- 32	1
MS20825-5D	64A- 34	1
▫MS20826-5D	64A- 56	1
▫MS20826-5D	64A- 71	2
MS21919-10	57A- 22	2
MS21919-10	57D- 40	2
▫MS21919DG10	49 -102	2
▫MS21919DG10	49 -104	2
▫MS21919DG10	49C- 28	12
▫MS21919DG17	24 - 19	1
MS21919DG17	57A- 19	2
MS21919DG2	60 - 33	3
▫MS21919DG2	64A	3
MS21919DG4	60	3
▫MS220-2	58A-124	3
▫MS24665-130	11	2
▫MS24665-130	13C	4
▫MS24665-130	37	2
▫MS24665-130	37	2
▫MS24665-130	37	2
▫MS24665-130	37	1
▫MS24665-130	41A	1
▫MS24665-130	41A	1
▫MS24665-130	58A	1
▫MS24665-132	11	4
▫MS24665-132	29	2
▫MS24665-132	41A	1
▫MS24665-132	44	1
▫MS24665-132	44	1
▫MS24665-132	44	1
▫MS24665-132	44	1
▫MS24665-132	47C	1
▫MS24665-132	47C	1
▫MS24665-132	47C	1
▫MS24665-132	48A	1
▫MS24665-132	49	2
▫MS24665-132	49	6
▫MS24665-132	49C	12
▫MS24665-132	49C	4
▫MS24665-132	51	4
MS24665-132	53	4
MS24665-132	58A	1
MS24665-134	44	1
MS24665-134	44	1
MS24665-134	48B- 4	1
MS24665-151	8A	2

PART NUMBER	FIGURE & INDEX NO.	QTY. PER ART.
MS24665-3	57D	2
▫MS24665-5	8A	2
MS25010-3A	14 - 2K	2
▫MS25010-3A	61 - 20	4
▫MS25010-3A	61A- 47	4
▫MS25010-3A	61B- 40	4
▫MS25010-3A	61C- 56	7
MS25010-31	61 - 7	4
MS25026-1	36 - 70	1
MS25026-1	36A- 72	1
▫MS25026-1	37 - 75	1
MS25026-1	48 - 37	1
▫MS25026-1	48A- 37	1
▫MS25026-1	63 - 40	4
▫MS25026-1	63	3
▫MS25041-6	61C- 21	1
▫MS25068-23	61B- 39	1
▫MS25083-1BA6	63 - 45	2
MS25083-1BA6	63 - 60	1
▫MS25125-E3	58A- 52	1
MS25226-4-4	63	1
MS25226-4-5	63 - 31J	1
▫MS25253-2	63	1
▫MS25912-3	57D	2
MS27039-0810	11B- 7	6
MS27039-1-12	9A- 16	6
▫MS28034-1	49 - 40	2
▫MS28034-1	49C- 39	2
MS28741-10-0201	68 - 38	1
MS28741-3	57D- 84	2
MS28741-3-0122	49C- 89	1
MS28741-3-0122	57D- 82	1
MS28741-3-0180	49C- 90	2
▫MS28741-4-0102	49 - 44	2
MS28741-4-0107	46 - 12	2
MS28741-4-0107	46	1
MS28741-4-0107	46	1
MS28741-4-0110	46 - 57	1
MS28741-4-0120	46 - 59	1
▫MS28741-4-0125	37 - 53	2
MS28741-4-0125	46 - 57	1
MS28741-4-0126	46 - 56	1
MS28741-4-0126	46 - 58	1
▫MS28741-4-0140	37 - 57	2
▫MS28741-4-0140	49	1
▫MS28741-4-0140	49C	1
▫MS28741-4-0150	49	1
MS28741-4-0152	46 - 15	1
MS28741-4-0153	36 - 62	4
MS28741-4-0153	36A- 60	4
MS28741-4-0156	46 - 16	1
▫MS28741-4-0160	37	2
▫MS28741-4-0165	37	2
▫MS28741-4-0170	37	2
▫MS28741-4-0180	37	2
▫MS28741-4-0184	49	1
▫MS28741-4-0184	49C- 43	1
▫MS28741-4-0190	49 - 46	1
▫MS28741-4-0190	49A- 16	1
▫MS28741-4-0190	49C- 45	1
▫MS28741-4-0190	49C- 85	1
MS28741-4-0190	65 - 27	1
MS28741-4-0190	66 - 38	1
▫MS28741-4-0194	49 - 43	1
▫MS28741-4-0200	49	1
▫MS28741-4-0200	49A	1
▫MS28741-4-0200	49C	1
MS28741-4-0200	57B	1
MS28741-4-0220	57B- 1	1
▫MS28741-4-0230	67 - 60	1
▫MS28741-4-0250	68 - 43	2
MS28741-4-0270	57A- 3	2
▫MS28741-4-0400	49C	1
MS28741-4-0400	65	1
MS28741-4-0400	66	1
MS28741-6-0160	57 -121	1
MS28741-6-0180	57 -122	1
▫MS28741-6-0180	68 - 42	2
MS28741-6-0200	57	1
MS28741-6-0204	57D- 45	2
MS28741-6-0220	57	1
▫MS28741-6-0250	49C- 91	1
MS28741-6-0250	56 - 21	2
▫MS28741-6-0250	57 -123	1
MS28741-8-0184	49	2
▫MS28741-8-0184	49C- 31	2
▫MS28741-8-0200	49 - 94	2
▫MS28741-8-0220	49 - 95	2
MS28741-8-0244	49	2
MS28741-8-0244	49C- 32	2
▫MS28775-138	37 - 17	2
MS28776-20	36A- 30	2
▫MS28778-4	67	1
▫MS28778-5	37 - 45	2
▫MS28778-5	41A- 44	1
▫MS28778-6	37F	4
MS28782-24	36 - 21	4
MS28878-5	36A	2
▫MS29512-06	57D	1
▫MS29512-06	57D	2
MS29512-4	57	2
MS29512-4	57B- 31	1
MS29512-4	57B- 34	2
MS29512-6	57	2
MS29512-6	57	6
MS29512-6	57	2
MS29512-6	57A	1
MS29512-6	57B- 38	2
MS29512-6	57B- 42	1
MS29512-6	57D	1
MS29512-6	57D	2
MS29513-10	57 - 20	2
MS29513-10	57F- 10	4
MS29513-10	57G- 17	2
MS29513-12	57	2
MS29513-12	57F- 17	12
MS29513-12	57G- 15	2
MS29513-136	57F- 11	2
MS29513-232	57 - 22	2
MS29523-1	57E- 2	4

PART NUMBER	FIGURE & INDEX NO.	QTY. PER ART.
MS3106-14S5S	63 - 73B	2
◻MS3106B14S2S	63	2
MS3106R12S3S	69 - 36	2
MS3108-14S7S	63 - 73A	2
◻MS35058-27	68 - 49	1
MS35337-4	49D	2
MS35489	57D	2
MS35489-10	64A	4
MS35489-11	48 - 48	2
◻MS35489-11	48A- 48	2
◻MS35489-12	57D	2
MS35489-15	69	4
◻MS35489-17	49 - 50A	2
◻MS35489-17	63 - 65	1
MS35489-17	69 - 59	2
MS35489-17	70	2
MS35489-18	69	1
MS35489-4	47D- 70	1
◻MS35489-4	64A- 21	2
MS35489-6	16 - 18	1
MS35489-6	16 - 25	1
◻MS35489-6	49C	4
MS35489-6	57A	2
MS35489-6	57B	2
MS35489-6	57B	18
MS35489-6	57C	2
MS35489-6	57D	8
◻MS35489-6	63 -116	1
MS35489-6	66	4
MS35489-6	69 - 55	4
MS35489-6	70 - 12	2
◻MS35489-9	47D- 25	1
MS9021-110	57E- 8	2
MS9048-065	71	1
M2916V	48B	1
M471X	39 - 33	1
◻M4861H1A	48A- 3	1
◻M4861H1A	48A-117	1
NAS-384-6P	14A- 71	24
NAS-391-6P	14A	24
NAS1029N4	8A	2
NAS1297-303	53	4
NAS1329A3K80	64A	8
◻NAS1334S6S10	17A- 26	1
NAS143-10	18 - 9I	AR
NAS143-12	18 - 9D	AR
NAS143-4C	26	4
NAS143-4C	27	20
NAS143-6C	41	2
◻NAS143-6C	41A	2
NAS143-8C	36 - 3	4
NAS143-8C	36A- 3	4
◻NAS143-8C	37 - 3	4
◻NAS145-17	37	10
◻NAS145-17	37	10
◻NAS145-24	37	8
◻NAS1455C8-16C	9A- 32	1
NAS146-46	41 - 1	2
◻NAS146-46/M/	41A- 1	2
NAS148A50	36 - 1	2
NAS148A50	36A- 1	2
NAS148A52	36 - 2	2
NAS148A52	36A- 2	2
◻NAS148A67	37 - 1	2
◻NAS148A69/M/	37 - 2	2
NAS150-35/M/	18 - 8	2
NAS152-37/M/	18 - 6	2
NAS152-40/M/	18 - 9	2
NAS179-6	58 -136B	6
NAS179-6	58 -136H	8
NAS220	14 - 69	12
NAS220	18 - 14A	2
◻NAS220-8	49 - 17	3
◻NAS220-8	49 - 19	4
NAS220-9	18 - 14	40
NAS220-9	18	20
NAS221	12A- 17	4
NAS221	12A- 19	4
NAS221	12B- 19	24
NAS221	16A- 2	9
◻NAS221-21	13D- 50	2
◻NAS221-21	13D	8
◻NAS221-21	13E	4
◻NAS221-21	13E	8
NAS221-29	13D- 41	2
NAS221-30	13E- 21	4
NAS221-6	49A	4
NAS221-6	49C	4
◻NAS221-8	13D- 42	2
NAS221-9	20 - 3	4
NAS221-9	20 - 5	4
NAS221-9	21 - 6	2
NAS221-9	21A- 8	16
NAS222	12A- 1	2
NAS222-16	41 - 38	2
◻NAS222-16	41A- 37	1
NAS222-17	41A	1
◻NAS222-19	49	2
◻NAS222-19	49C	2
NAS222-28	13 - 15	2
NAS222-9	12 - 23	4
◻NAS222-9	49	2
◻NAS222-9	49C	2
NAS287-25-2	27 - 17	2
NAS287-25-2	31	2
NAS287-25-2	31 - 78	2
NAS287-25-2	32	2
NAS302-44-5255	58 - 83	1
NAS302-77-3707	33 - 8	2
NAS302-77-3827	58 - 70	1
NAS302-77-440	58A- 76	1
NAS304-22-0186	13A- 28	2
NAS304-23-0141	13 - 18	2
NAS304-35-0564	32 - 13	2
NAS305-34-0652	31 - 84	2
NAS305-35-0672	31 - 85	2
NAS305-55-1043	31 - 28	1
NAS314-14-1401	33 - 7	2
◻NAS334CPA30	37 - 18	4
NAS338-8-7P	58 - 7	2

PART NUMBER	FIGURE & INDEX NO.	QTY. PER ART.
NAS384-6	12A- 28	2
NAS384-6	12A- 30	5
NAS384-6	13A- 33	8
NAS384-6	14A- 16	1
NAS384-6	14B	2
NAS384-6	47C- 37	10
NAS384-6	63 - 30B	5
NAS384-6	63 - 31	4
NAS384-6-10	14 - 19	4
NAS384-6-10P	14	8
NAS384-6-10P	14	8
◻NAS384-6-10P	14C	3
NAS384-6-10P	14D	1
◻NAS384-6-12P	8 - 48	4
NAS384-6-12P	12A- 32	2
NAS384-6-12P	14A- 97	4
NAS384-6-12P	14B	4
NAS384-6-14	58A	2
◻NAS384-6-6P	11 - 57	14
NAS384-6-6P	12A- 37	1
◻NAS384-6-6P	13D- 57	4
◻NAS384-6-6P	13E- 37	4
◻NAS384-6-6P	14C	1
◻NAS384-6-6P	14C	2
◻NAS384-6-6P	47C- 40	6
◻NAS384-6-8P	47D	8
NAS384-6P	14	13
NAS384-6P	14A- 71	24
NAS384-6P	14B	6
NAS384-6P	47D	5
NAS384-6P	47D	4
NAS384-8	13C	4
NAS384-8-10P	14B	1
NAS384-8-10P	14D	1
NAS384-8-6	47C	4
NAS384-8-6	47C	16
NAS385-6-8P	14B	2
NAS387-10P	14A-123	2
NAS387-1032	61C	4
NAS387-1032	61C	7
NAS387-1032	61C- 24	3
NAS387-1032-8P	14D- 75	4
◻NAS387-440-4P	60	4
◻NAS387-440-4P	60 - 31	2
NAS387-6	47C	8
NAS387-632-10	13 - 13	8
NAS387-632-14P	61C- 77	2
NAS387-632-18P	61C- 76	2
NAS387-632-20P	61C- 75	2
NAS387-632-7P	14 - 28	8
◻NAS387-632-8	47D	12
◻NAS387-632-8	47D	8
◻NAS387-632-8P	47D	2
◻NAS387-632-8P	47D	4
◻NAS387-632-8P	47D	8
◻NAS387-632-8P	47D	8
◻NAS387-632-8P	47D	8
◻NAS387-632-8P	47D	8
NAS387-632R10P	63 - 84	8
NAS387-8R8	14C- 93	2
NAS387-832-8	14B	16
NAS387-832-8P	14 - 13	6
NAS387-832-8P	14 - 15	8
NAS387-832-8P	14A-103	3
NAS387-832-8P	14A-105	8
NAS387-832-8P	14B	8
◻NAS387-832-8P	47D	4
◻NAS391-8BP	14C	2
NAS391-6	14A	1
◻NAS391-6	14C	1
◻NAS391-6P	8	4
◻NAS391-6P	11	14
NAS391-6P	13	8
◻NAS391-6P	13D	4
◻NAS391-6P	13E	4
NAS391-6P	14	8
NAS391-6P	14	8
NAS391-6P	14A	24
NAS391-6P	14B	2
NAS391-6P	14B	6
◻NAS391-6P	47D	2
NAS391-8P	14C	2
NAS391B6P	14C	3
NAS391B6P	14D	1
NAS391B6P	61C	6
NAS395-10-1	48A	4
NAS395-6-1	14	4
NAS395-6-1	14A- 82	5
NAS395-6-1	14B	5
NAS395-6-1	47D	5
NAS395-6-1	47D	4
◻NAS397-28	49A	6
◻NAS397-28	49A	4
NAS42HT3-28	27 - 33	2
NAS427K10	33 - 17	2
NAS427K11	33 - 22	1
NAS427K12	58 -103	2
NAS428-3-6	58	1
NAS428H4-10	34 - 5	2
NAS428H4-14	34 - 28	2
NAS43-4-10	12	4
NAS43-4-12	12	2
NAS43C3-23	32	2
NAS43DD3-16	49	2
NAS43DD3-16	49C	2
NAS43DD3-22	49	2
NAS43DD3-22	49	2
NAS43DD3-22	49C	4
NAS43DD4-40	49	4
NAS43DD4-40	49C	2
◻NAS444-4	8	6
NAS446-1	63	6
NAS446-1	63	2
NAS446-2	9	2
NAS446-2	14A	2
NAS447-10SP	58A	2
NAS451	66	1
NAS464-5-23/M/	38 - 21	2
◻NAS464P7LA16/M/	37 - 25	4
NAS466-2	14 - 11	2

PART NUMBER	FIGURE & INDEX NO.	QTY. PER ART.
◻NAS487-20	64	3
NAS495-14-26/M/	18 - 7	2
◻NAS50-112	24 - 4	2
NAS50-187	41 - 28	2
◻NAS50-187	41A- 56	1
NAS50-200	36 - 23	2
NAS50-262	36A- 23	2
NAS50-87	27 - 37	2
◻NAS50-87	28 - 25	1
NAS50-87	31 - 59	1
◻NAS50-87	44 - 21	1
NAS50-93	43 - 9	2
NAS505-3J	18 - 38	2
◻NAS505-3J	18 - 42	2
NAS505-4J	41 - 37	2
◻NAS505-4J	41A- 36	1
NAS505-5J	38 - 22	2
NAS51-131	39 - 39	1
◻NAS51-131	39 - 41	1
NAS51-18N	11 - 47	4
NAS51-31	36 - 77	1
NAS51-31	36A- 79	1
◻NAS51-31	37 - 81	1
NAS51-43	39 - 32	1
NAS51-87	58 - 36	1
◻NAS51-87	59 - 6	1
NAS53-32	59 - 9	3
NAS53-5	31 - 67	1
◻NAS54-16/M/	44 - 38	1
NAS54-33	59 - 10	3
NAS54-34	44 - 32	1
NAS55A14	42 - 34	1
NAS557-20A	49C- 52C	2
NAS561P4-10	71	1
◻NAS68-A06	70	2
◻NAS680A3	58A	2
◻NAS680A3	64	4
◻NAS686A3	9A	6
◻NAS697A06	47D	2
◻NAS697A06	47D	4
◻NAS697A06	47D	8
◻NAS697A06	47D	12
◻NAS697A3	49A	4
◻NAS697A3	49C	4
◻NAS76A7-020	44 - 34	1
ND-R4A	25A- 36	1
ND77R4	25	2
ND77R4	25A- 16	2
NK-73A-6	37E- 4	12
NO NUMBER	7	1
NO NUMBER	7	1
NO NUMBER	7	1
NO NUMBER	7	1
NO NUMBER	9 - 14	1
NO NUMBER	13D- 59	2
NO NUMBER	13D- 60	2
NO NUMBER	13E- 39	2
NO NUMBER	13E- 40	2
NO NUMBER	14	1
NO NUMBER	14	12
NO NUMBER	14	3
NO NUMBER	14	3
NO NUMBER	14	1
NO NUMBER	14A	1
NO NUMBER	14A	1
NO NUMBER	18	1
NO NUMBER	18	1
NO NUMBER	49 - 66	2
NO NUMBER	49A- 23	2
NO NUMBER	49A- 24	2
NO NUMBER	49A- 25	2
NO NUMBER	57A	1
NO NUMBER	57A	1
NO NUMBER	57B-	1
NO NUMBER	57C-	1
NO NUMBER	57F- 3	2
NO NUMBER	57F- 6	4
NO NUMBER	57F- 13	2
NO NUMBER	57F- 14	2
NO NUMBER	57G- 6	4
NO NUMBER	59	1
NO NUMBER	61	1
NO NUMBER	61A- 28	1
NO NUMBER	61B- 23	1
NO NUMBER	61B- 46	1
NO NUMBER	61B- 54	1
NO NUMBER	63 - 61B	2
NO NUMBER	63 - 61E	2
NO NUMBER	63 - 72	1
NO NUMBER	63 - 79A	2
P-14577	49D	1
P-15782	49D	1
P-19086	49D	1
P-21819	49D	1
P-4235	49D	2
P-60219	49D	1
P-61195	49D	3
P-70249	49D	4
P-8508	49D	1
PB094070COG	60	2
PK562-8-6	18 - 5	6
◻PK65A-4-6	13C- 15	12
◻PK65A-4-6	13C	12
PK65A-4-6	14B	1
PK65A-4-6	58 -142	2
◻PK65A4-6	9	3
◻PK65A4-6	9A	24
◻PK65A4-6	58A	1
PK74XZ6-8	14D	10
PK76-2-6	9A	26
PK76XZ-6-4	13A- 1A	6
PK76XZ-6-6	12B- 22	2
◻PK76XZ-8-7	8	6
PK76XZ6	9	10
PK76XZ6-4	14	1
PK76XZ6-4	14B	1
PK76XZ8-10	58 -146	2
◻PK76XZ8-10	58A	2
PK78-4	13C	8
PK79XZ4-6	14D	6

PART NUMBER	FIGURE & INDEX NO.	QTY. PER ART.
▫PK84XA4-4	11 - 7	10
▫PK84XA4-4	11 - 12	14
▫PK84XA4-4	11 - 30	19
▫PK84XA4-4	11B	14
▫PK84XA4-4	11C	15
PK84XA6-6	64A	3
PRP-902-32	49K- 28	2
PRP-902-46	49K- 42	2
PRP-909-6	49K- 22	4
PRP-914-12	49K- 43	2
PRP-914-12	49K- 55	2
PSM10N	58 -136	2
▫PSM10N	63	1
PSM15N	58 -134A	1
▫PSM3N	61C- 51	1
PSM30N	58 -133	1
PSM5N	58 -134	8
PSM5N	58	9
RA1039C	54 - 11	2
RA1039C	54	1
REB3N	52A- 12	2
REB3N	54 - 7	6
REB3N	54 - 9	2
REB3N	54 - 23	2
REB3N	54 - 26	2
REB3N	54 - 36	2
▫REM40E	49	16
▫REM40E	49C	16
▫RRN237C	37 - 14	2
▫RRN237C	37 - 46	2
RSA5AD1	49C- 8	2
▫R102	63	1
R426-0041	25 - 20	2
R768-0004	25	1
R768-0004	25A- 15	1
R812-3811-466	25 - 17	2
R901-311	25 - 7	1
R901-311	25A- 40	1
R901-327-20	25A- 17	1
R901-327-22	25 - 6	1
R901-327-24	25 - 5	1
R901-327-24	25A- 18	1
▫R903	7	1
S-123	16 - 19	1
S-123	16 - 26	1
S-129	16 - 17	1
S-140	15 - 26	2
S-140	15 - 33	2
S-167	16 - 16	1
S-241	54	1
SALP-T6-6	37 - 16	4
SA2951-26	54 - 3	1
SA2951-27	54	1
▫SC2611	47D- 9	2
▫SC2611	63 - 94	6
SD-3	20 - 16	1
SD-3	26	3
SK162	25 - 19	2
SK162	25A- 9	2
SP-2814	56 - 19	2
SP2890-1	56 - 18	1
▫SR88	49	16
▫SR88	49C- 94	16
SS-1	63 - 85	2
SS-48152	61A- 46	1
▫SS32-1	47C- 32	1
▫SS32-1	63 - 85	2
SS98577	14D- 96	4
SS98577	14D-102	2
STD1410	49B- 14	8
STD1410	49B- 19	8
STD1763	49B- 20	8
STD1826	49B	12
STD28	49B	2
▫STD294	49C- 97	1
STD35	49B- 12	8
STD35	49B- 18	8
STD475	49B- 13	8
STD670	49B	16
STD670	49B	2
STD692	49B	16
STD788	49B- 8	4
STD8	49B	36
STD860	49B	2
▫S10340	47C- 59	1
▫S10340	63 - 80	1
▫S104-12	63 - 77	2
S123	38 - 39	2
S1452-048	41 - 39	1
▫S1452-048	41A- 38	1
▫S152X84	9 - 10	1
▫S152X84	11 - 36	2
S167	38 - 38	2
S177	66 - 10	1
S185-111-003	31 - 48	2
S197	53 - 22	2
S207-6	54 - 39	2
S241	54 - 19	4
▫S4-225	63 -109	1
S4-250	18	22
S4-250	18	26
▫S4LN20	49 - 33	2
▫S4LN20	49C	2
▫S4LN200	49A- 17	2
▫S4LN204	49A- 18	2
▫S4LN21	49 - 32	2
▫S4LN21	49C- 15	2
▫S5S	24 - 8	4
T.S. 1222-2	7 - 15	1
TA726TD4	54 - 38	2
▫TE108-15	49 -116	2
▫TK1518	7 - 20	1
▫TK1521	7 - 13	1
▫TS1171-2	7 - 19	1
▫TS1222-1	7 - 14	1
▫TS1222-3	7 - 16	1
▫TS1222-4	7 - 17	1
TYPE 130	61 - 3	1
V-40A76	48C- 18	2
▫VM911M-2	58A	1

PART NUMBER	FIGURE & INDEX NO.	QTY. PER ART.
▫VM911M-2	58A	1
▫VM911M-2H	58A- 47	1
▫VM911M-2H	58A- 50	1
▫VM911M-3H	58A- 46	1
▫VM911M-3H	58A- 51	1
VM911M-7	58A	1
VM911M-7	58A	1
VM911M2H	61 - 10	2
VM911M2H	61A- 21	1
VM911M2H	61A- 33	1
▫VM911M2H	61B- 28	1
▫VM911M2H	61B- 34	1
VM911M3H	61 - 11	2
VM911M3H	61A- 22	1
VM911M3H	61A- 34	1
▫VM911M3H	61B- 27	1
▫VM911M3H	61B- 35	1
VM912-4	61	1
VM912-4	61A- 45	1
VM912M6	61A- 19	1
▫VM912M6	61B- 30	1
VV-15-625	46 - 21	2
VV-15-625	46 - 63	2
VV-15-625	47 -	4
▫V3-1	58A- 30	2
W98292-2-160	8 - 31	1
XA30A385	13A	AR
XR-5023	58A- 87	1
▫XR-5030	58A- 86	1
YZ10-1	39	2
▫YZ14H1	63 - 96	1
YZ18H1	58 -149	1
▫ZC268-38-7	64 - 3	1
▫ZF454	64 - 54	5
0S-59-1	7	1
0S59-1	7	1
0153-351	58A- 88	1
02FC07A158	69 - 19	2
0317-351	58	1
0317-451	58	1
0320-351	58	1
0320-451	58	1
07C56	48C- 3	1
08125	41B- 4	2
08231	41B- 10	1
08231	41B- 13	1
09916-M1	39 - 29	1
1-3/4D48F40	63	1
1/16 X 1/2 PIN.	13E	2
▫1/4 IN.	44 - 5	1
1G4-3	61C	1
1H22-1	70 - 25	2
1J1-4	49C- 54A	2
1K1-6-10	69 - 47	2
1K1-6-12	49C	4
1K1-8-12	70	4
1K17-1	62B- 23	2
1K43-12-12	49C- 53A	2
▫1K9-4-6	62B- 25	2
▫10-126630-1	63 - 31H	2
10-126676	61C- 83	2
▫10-24X1/2	37G- 11	2
▫10-32NF2X3/4	37G- 6	2
▫10-32NF2X5/16	37G- 15	2
10-357230-1	61C- 82	2
10-407	48	1
▫10DU12	37 - 21	8
100696-S-ZN-020	13B- 22	6
100696D-YG006	58 - 39	1
100696D-ZL016	46	1
100696D-ZV014	47C- 7	1
100696F-ZB019	58	2
100696S-YP003	61	4
100696S-YP003	61B- 41	4
100696S-ZL102	34 - 37	2
100696S-ZN025	57A	8
100696S-ZP108	13A	4
100696S-ZU018	58A-125	1
100696S-ZY017	25 - 10	1
100696SYZ017	25A- 25	1
100696SZH020	57A- 10	8
100696X-YD024	39 - 16	1
100696X-YM015	58 -159	2
100696X-YM015	58A- 28	1
100696X-ZC002	61A- 24	1
▫100696X-ZC002	61B- 50	1
100696X-ZC004	61A- 25	1
▫100696X-ZC004	61B- 51	1
100696X-ZC021	12A	2
100696XZC002	58	1
100696XZC003	58	1
100696ZP109	12A	2
100801-56-0437	32 - 11E	1
100801-56-0516	32 - 11D	1
100801-56-0906	32 - 11C	1
100801A3-0380	65 - 5	2
100801S5-0500	22	2
100801S5-0500	22A	2
100801S5-4781	38 - 33	2
100801S6-0484	32 - 8	1
100801S6-0516	32 - 7	1
100801X12-0605	10	1
▫100801X2-0062	11 - 20	1
▫100801X2-0097	11 - 23	1
100801X4-0135	54	2
100801X4-0250	54 - 15	2
100801X6-0968	32	1
100801X6-1000	13C- 5	2
100801X6-1060	12C- 4	4
100801X6-1060	13B- 5	4
100942C0020-31	38 - 49	2
100942H0022-22	10 - 69	1
100942L0116-37	10	1
100942W0023-17	10 - 81	1
100942X0120-8	12 - 9	2
100943CR-ZX020F	14B	2
▫100943CR-ZX020F	49C- 75	12
100943YC112D	39 - 11	1
▫100943YD302C	44 - 18	2
▫100943YN012R	47C- 58	1

PART NUMBER	FIGURE & INDEX NO.	QTY. PER ART.
100943YN012R	47D- 13	1
▫100943YN012R	63	1
100943YU100G	13A- 3	3
100943ZA016J	13D- 15	2
100943ZA016J	13E	6
100943ZE316G	43 - 4	2
100943ZF100G	13 - 3	3
▫100943ZG108G	60 - 29	1
100943ZS027G	13D- 10	2
100943ZS027G	13E- 10	2
100951CR-WP	10	AR
100951CR016YF	42 - 11	2
100951DD032F	36A- 78	1
100951DD032VA	46	1
100951DD032YF	36 - 76	1
100951DD032YL	37 - 80	1
100951P062YH	38	4
100951R-.156XP	61	1
100951S016XF	36	2
▫100951S016XF	37 - 5	4
▫100951S016YP	41A	AR
100951S031XW	35 - 40	1
100951S032XF	36	2
▫100951S032XF	37	4
▫100951S032XL	44 - 9	2
100951S062ZL	61	2
100951S062ZL	61A	2
100951S062ZL	61B	2
100951S063WZ	38	2
100951S063XP	38 - 10	8
100951S063YH	41 - 50	1
▫100951S063YH	41A- 23	1
100951S063YU	38 - 12	2
100951S063ZT	22	6
100951S063ZZ	41 - 49	1
▫100951S063ZZ	41A- 22	1
100951X016XF	36A	2
100951X025	58	4
100951X025VB	58A- 27	4
100951X031VN	30	4
▫100951X031YM	41A- 30	1
▫100951X031YN	41A- 31	1
100951X032WF	13D	2
100951X032WF	13E	4
100951X032XF	36A	2
100951X032YP	41 - 3	2
▫100951X032YP	41A- 3	2
100951X050ZM	34	2
▫100951X050ZZ	51	8
100951X063XD	36 - 5	4
100951X063XD	36A- 5	4
▫100951X063YH	44 - 29	1
100951X063YW	39 - 10	1
▫100951X100WL	37	AR
100951X100YF	10	1
101321-00A0750	10 - 19	1
101321-2G0188	8 - 19	1
101321-2G0188	8 - 22	1
▫102361-00128	61C- 28	2
102361-00228	18 - 35	2
▫102808-4D012	47C- 50	1
▫102809-072-018	60 - 25	4
102809-093-026	43 - 6	1
102809-124-025	58	1
102809-125-029	10 - 40	1
102809-125-029	10 - 67	1
▫102809A093-011	11	1
102809A125-014	35 - 28	2
102809A187-024	10 - 74	1
102933D3ZM0750	48	6
102933D3ZM0750	48A	6
102933D3ZM1375	48	6
102933D4ZG1650	67 - 84	1
102933D4ZJ0190	13E	6
▫102933D4ZJ0375	24 - 18	2
102933D4ZJ1000	13D	4
102933D4ZM0156	48	1
102933D4ZM0156	48A	2
102933D4ZM0190	13D	4
102933D4ZM0190	13D	2
102933D4ZR0375	16 - 3	1
102933D5YA0125	13 - 17	2
102933D5YA0188	13 - 16	2
102933D5ZM0190	12A	2
102933D5ZM0190	12B- 9	2
102933D5ZM0190	12C- 22	4
102933D5ZM0190	13A- 36	4
102933D5ZM0190	13B- 23	4
102933D5ZM0190	13C- 35	8
102933D5ZM2452	59 - 10A	3
102933D5ZX0749	35	2
102933F4ZM0312	48	1
102933F4ZM0312	48	2
102933S4ZE0375	13	2
102933S4ZH0075	61	1
102933S4ZJ0093	10 - 83	2
102933S4ZJ0093	47D	1
102933S4ZJ0093	54	2
▫102933S4ZJ0095	48A- 81	1
102933S4ZJ0156	12	2
▫102933S4ZP0140	11	1
▫102933S4ZP0159	11 - 19	1
102933S5ZJ0625	51 - 9	16
102933S5ZL0125	38 - 30	4
102933S5ZM0312	13	2
102933S5ZP0620	13C- 29	4
102933S5ZR0620	13C	4
102933S5ZS0620	13C	4
102933S6ZM0B75	13A- 12	2
10293304ZJ0190	13D- 16	6
10293304ZM0190	13E	4
103637	18 - 29	2
103637	21 - 7	1
103637	21A- 18	2
103637	22 - 9	2
103637	22A- 27	2
103637	27 - 49	2
▫103637	29 - 19	2
103637	30 - 17	1
104036D-ZC1900	14	1

PART NUMBER	FIGURE & INDEX NO.	QTY. PER ART.
104036D-ZC1900	14A- 29	1
104215-00300	18 - 17	2
104215-00300	19A	4
1044-513S	48	1
▫1044-513S	48A	1
105019	48 - 45	1
105019	48A- 45	1
105077-10A	31 - 14	1
105077-10A	33	1
105090-032-1D	26	2
105090-032-1D	30	4
105090-032-1M	29	2
105090A032-10J	18 - 9G	2
105090A032-12K	18 - 9B	2
105090B005-6E	25 - 12	AR
105090B005-6E	25A- 27	4
105090CR032-4E	39 - 35	1
105090CR150-5E	51 - 10	16
105090D030-9F	71 - 31	1
105160-035	66 - 5	1
105160-037	66 - 3	1
105739S-XJ0160	54 - 25	2
105739S-XU0437	32	1
105739S-XU0484	32	1
105739S-XU0516	32	1
105739S-XU0516	32	1
105739S-XU0906	32	1
105739S-YA0137	38 - 36	2
105739S-YK0431	36 - 47	2
105739S-YK0431	36A- 36	2
▫105739S-YK0431	37 - 41	2
▫105739S-YP1483	41A- 29	1
105739S-YZ0391	35 - 32	1
105739S-YZ0532	35 - 20	2
105739S-YZ0532	35 - 47	1
105739S-YZ0594	35 - 33	1
105739S-YZ0594	35 - 45	2
105739S-YZ0641	35 - 41	1
105739S-ZG0250	45 - 4	4
105739S-ZK0190	41 - 53	1
▫105739S-ZK0190	41A- 33	1
105739SYH0230	23 - 4	4
105739X-XC0219	8 - 16	2
105739X-XD0230	34 - 26	1
105739X-XG1312	58 - 63	1
105739X-XG1312	58A- 71	1
▫105739X-XP0221	13C- 66	1
▫105739X-XR0150	13C- 67	1
105739X-XR0150	14	1
105739X-XR0221	14	1
105739X-YE0218	34 - 36	2
105739X-ZD0250	34 - 35	2
105739X-ZM0093	34 - 17	1
105739X-ZM0187	34 - 24	1
▫105739X-ZM0500	40 - 12	2
105739X-ZN0135	35 - 24	4
▫105739X-ZP0500	40 - 4	2
▫105739X-ZP1050	40 - 3	2
105739X-ZR0070	10 - 54	1
105739X-ZR0110	10 - 49	1
105739X-ZR0110	10 - 61	1
105739X-ZR0140	10 - 29	1
105739X-ZR0140	10 - 35	1
105739X-ZR0173	10 - 50	1
105739X-ZR0187	10 - 58	1
105739X-ZR0220	10 - 55	1
105739X-ZR0320	10 - 32	1
105739X-ZR0328	10 - 37	1
105739X-ZZ0156	34 - 25	1
105739XZL0740	52A- 10	2
105740X-XE1333	58 - 91	1
105740X-YD0490	41 - 9	1
105740X-YD0490	41A- 47	1
105740X-YD1365	41 - 7	1
105740X-YN1458	41 - 8	1
▫105740X-YN1458	41A- 48	1
105740X-YY1333	58A-105	1
▫105740X-YO1365	41A- 46	1
105740X-ZG0190	31 - 50	2
▫105740X-ZH0115	29 - 16	2
▫105740X-ZJ0490	40 - 13	2
▫105740X-ZJ0490	40 - 17	2
▫105740X-ZL0104	44 - 13	2
▫105740X-ZR0480	40 - 10	2
▫105774C-ZA00400	63 -107	1
▫105774C-ZA00808	11 - 24	1
▫105774C-ZE00212	51	4
▫105774C-ZE00212	51 - 25	2
▫105774C-ZE00708	51 - 21	3
105774C-ZG18700	18 - 12	4
105774C-ZG18700	18 - 32	4
105798	48 - 49	1
▫105798	48A- 49	1
▫105798-12	48A- 89	5
▫105798-12	49	2
▫105798-12	49	1
105798-13	53A- 13	2
▫105798-18	48A- 52	1
105798-38	66 - 4	1
105798-41	66 - 2	1
105798-6	48 - 14	2
105798-6	48A- 14	2
105798-6	48A-123	2
105798-7	48	2
105798-7	48 - 83	5
105798-7	48 - 98	2
105798-9	48 - 76	1
105798-9	48A- 83	1
105798-9	48A-114	2
105982-5A11-010	63 - 73	1
▫106043ZA020	48A- 30	1
106043ZA0200	48 - 30	1
106043ZC74	53A- 20	2
106200-10-84	68 - 29	2
106200FR10-16	68 - 32	2
106200FR10-56	69 - 40	2
106200FR10-72	69 - 45	2
106200FR10-72	69 - 69	2
106200FR12-17	49 - 21	2
106200FR12-24	49A- 6	1
106200FR12-24	49C- 59	1
106200FR12-32	49 - 23	1
106200FR12-56	49A	1
106200FR12-56	49C	1
106200FR12-64	49	1
106200FR4	66 - 16	2
106200FR4-106	68 - 37	2
106200FR4-11	49 - 24	2
106200FR4-36	49	1
106200FR4-52	49A	1
106200FR4-52	49C	1
106200FR4-54	49C- 60	1
106200FR4-55	49A- 9	1
106200FR4-58	49 - 26	1
106200FR4-58	49 - 63	2
106200FR4-8	49 - 60	2
106200FR8-14	49 - 53	1
106200FR8-14	49 - 59	2
106200FR8-15	49 - 57	2
106200FR8-35	49A- 4	1
106200FR8-35	49C- 50	1
106200FR8-36	49A	1
106200FR8-36	49C	1
106200FR8-45	49	1
106200FR8-50	49 - 65	2
106200FR8-54	49A	1
106200FR8-54	49C	1
106200FR8-56	49A	1
106200FR8-60	49 - 51	1
106200FR8-60	49	1
106200FR8-60	49A	1
106200FR8-69	49A	1
106200FR8-70	49A- 12	1
106200FR8-70	49C- 57	1
106200FR8-72	49A- 5	1
106200FR8-80	49	1
106200H10	62A- 72	2
106200H10-10	70	2
106200H10-15	62 - 42	1
106200H10-26	62 - 39	2
106200H10-26	62 - 40	1
106200H10-26	62A- 70	2
106200H10-35	69 - 49	2
106200H10-60	69 - 50	2
106200H10-8	70 - 13	5
106200H12-32	49	2
106200H12-8	70 - 27	4
106200H4	57 - 39	6
106200H4	57 - 56	4
106200H4	57	2
106200H4	57B- 11	4
106200H4	57C- 1	2
106200H4	57C- 6	2
106200H4	57C- 16	4
106200H4	57C- 21	2
106200H4	57D- 61	2
106200H4	57D- 63	2
106200H4	57D- 72	2
106200H4	57D- 74	2
106200H4	57D- 80	2
106200H4	57D	2
106200H4	65 - 19	1
106200H4-15	57C- 9	2
106200H4-15	57D- 57	2
106200H6	57C- 14	2
106200H6	57D- 69	2
106200H6-15	57C- 11	2
106200H6-15	57C- 13	2
106200H6-15	57D- 67	4
106200H8	62A- 74	2
106200H8-12	69 - 33	2
106200H8-35	49C- 52	1
106200H8-60	49C	1
10620048-12	68 - 25	2
106242-10	46 - 60	4
106242-10-00800	46 - 18	4
106242-3-00208	25 - 9	2
▫106242-5-01550	9A- 34	1
1081-14	48B- 12	3
1081-21	48B- 11	2
108492S416-016	38	2
109-230-104	61C	1
109-250-104	61C	1
109010	47 - 6	4
109615-2-021	12 - 2	4
109615-4-081	17A- 27	1
▫11-8150-1	49	1
▫11-8150-1	49A	1
11C30	48 - 24	1
▫11C30	48A- 24	1
11005-6	69 - 56	2
1101901	49 - 85	2
1101901	49J-	2
1101905	49	2
1101905	49C- 10	2
1101905	49J	2
▫1105052	49	2
▫1105052	49C	2
1105052	49J	2
▫1109687	49 - 84	2
1109687	49I-	2
1111-517700	57 - 33	4
1111-517700	57 - 54	2
1111-517702	57 - 90	2
1111-595272	57	4
1111-595272	57	2
▫11116M1	24 - 7	2
111177-00216	51 - 16	4
111177-00316	51 - 18	4
111177-02600	51 - 17	4
111190-14	43 - 8	2
111191-06000	14A-117	3
111192-02400	14A-119	3
111200-6	36 - 34	2
111200-6	36A- 31	2
111200-6	41 - 23	1
▫111200-6	41A- 53	1
111503-1125-937	59 - 18	1
111503-1375-468	59 - 19	1
111503-750-047	59 - 20	1
111504ZL0102-13	13B- 20	2
111504ZL0102-13	13C- 68	4
▫111504ZM0016-8	13C- 11	2
111504ZM0020-8	12C- 14	2
▫111505	63 -101	2
▫1116902	49 - 80	1
▫1116902	49C- 14	1
▫111716-2XX30	49	1
▫111716-2XX38	49	1
▫111716-2XX42	49 - 75	1
▫111716-6XX10	49 - 10	1
▫111716AX2XX18	49	2
111716AX2XX26	50 - 10	2
▫111716AX2XX30	49C- 84	2
111716AX2XX30	50	2
▫111716AX3XX32	49A- 22	2
111716AX3XX42	48 - 13	1
▫111716AX3XX42	48A- 13	1
▫111716AX3XX42	48A-122	2
111716AX4XX-11	48 - 88	1
111716AX4XX-120	48	1
111716AX4XX-99	48 - 79	1
▫111716AX4XX11	48A- 95	1
111716AX4XX32	48 - 97	1
111716AX4XX70	48 - 89	1
▫111716AX4XX70	48A- 96	1
▫111716AX4XX99	48A- 90	1
111716AX5XX-44	48 - 75	1
111716AX5XX11	48A-108	1
▫111716AX5XX44	48A- 82	1
▫111716AX5XX44	48A-113	1
111716AX5XX52	48A	1
111722-03408	18 - 11	1
111722-05300	18 - 60E	2
111722-05400	18 - 60F	2
▫111745	6 - 1	1
▫1118976	49	2
▫1118976	49C- 12	2
1118976	49H	2
1119144	49 - 77	2
1119144	49H-	2
▫1119237C	49	2
▫1119237C	49C	2
112105	20	4
112105	20	4
112105	21	2
112105	21	2
112105	21A	16
▫112105	29	8
112105	30	4
112136-4	46 - 37	1
112406	36A- 46	2
▫112406	37 - 27	2
112416	18 - 60D	2
112416-01024	14A- 86	2
112416-01024	14B- 88	2
▫112416-01316	41A- 70	1
112436-6	54 - 31	4
▫112436-6	63 - 75	2
112447S1C-C300T	48 - 57	1
▫112447S1C-C300T	48A- 58	1
▫112700	6 - 25	1
▫112700	63 -109A	1
▫112733-2	6 - 18	4
▫112733-4	6	4
▫112734	6 - 8	5
▫112735 B-C	6 - 5	2
▫112735 W-C	6 - 5A	2
▫112736 B-C	6 - 4	1
▫112736 W-C	6	1
113-205-102	61C	2
113642	12A	1
113642	12A	1
113642	13A	2
113642	13A	2
▫113658-034-00	7 - 7	1
113667F	7	1
113676-2	13A- 26	4
113676-4	12 - 20	2
113676-4	12A- 22	1
113676-4	12A- 25	1
113676-4	13A- 39	2
113676-4	13A- 42	2
113677	12 - 19	2
114693-2-	62B- 26	2
114693-2-00900	71 - 27	1
114693-4-	62B- 24	2
114693-6-	62B- 22	1
114931-1-10	61C	1
114931-1-11	61C- 54	1
114931-1-13	58	1
114931-1-13	61C- 52	1
114931-1-16	61C	1
114931-1-2	61	1
114931-1-2	61B- 45	1
114931-1-2	61C- 55	1
114931-1-3	58 -136K	1
114931-1-3	61C- 53	2
114931-1-4	61	2
114931-1-4	61B- 43	1
114931-1-6	61C	2
114931-1-7	58 -136D	1
115	37D	2
115	37E	2
115005-1	69 - 60	2
115005-6	69 - 15	2
115081-3	6	2
▫115081-5	6 - 19	2
▫115081-7	6	2
115092-10500	18 - 10	1
▫115093	17A- 10	1
▫115098-3	6 - 23A	2
115150	15 - 7	4
115150	15 - 12	2
115155X10FT	10 - 91	1
115167CXZ060444	49C- 57A	1
▫115167CXZ060585	49 - 72	2
▫115167CXZ061005	49	2
▫115167CXZ061005	49A- 21	2
115167CXZ070644	49C	1

PART NUMBER	FIGURE & INDEX NO.	QTY. PER ART.
1170-7	35 - 38A	2
118504	7	1
118505	7	1
118540BHP1	16 - 27	1
118540BHP1	31 - 72	4
118540BHP1	31 - 81	2
118540BHP1	31 - 91	2
118540BHP1	31 - 94	2
118540BHP2	31 - 16	2
118540BHP2	31 - 19	2
118540BHP2	31 - 22	2
118540BHP2	32 - 19	4
118540BHP2	33 - 20	2
118540BHP3	31 - 1	1
118540BHP3	31 - 4	1
118540BHP3	31 - 87	1
118540BHP3	32 - 2	6
118540BHP3	32 - 5	8
118540BHP3	33 - 12	2
118540BHP3	33	2
118540BHP4	31 - 6	2
118540BHP4	31 - 9	2
118540BHP4	31 - 12	2
118540BHP4	31 - 25	2
118540BHP4	31 - 37	1
118540BHP4	32 - 1	8
118540BHP4	32	8
118540BHP4	32 - 11A	8
118540BHP4	33 - 1	2
118540BHP4	33 - 2	2
118540BHP4	33 - 9	2
118540BHP4	33 - 13	2
118540BHP4	33 - 15	2
118540BHP4	58 -101	1
▫118540BHP4	58A-123	1
▫118641	13D- 14	12
▫118641	13E- 13	12
▫118642-1	41A- 40	1
118642-3	36A	2
▫118642-7	37 - 42	2
118650	14B- 6	1
118650-1	14D- 1	1
▫118654	63	1
118664	58A- 49	REF
▫118664	61C- 41	1
118665	58A- 53	REF
▫118665	61C- 42	1
118869	49D	1
119	58A- 24	1
1191-4CNX.38	34 - 4	2
119246	49D	1
1195	14A	32
1195	14C	4
1195	14D	4
1195	14D	3
12B-126	18 - 9K	4
128108	18 - 9M	2
▫1203	17	1
▫1203	63	1
120638	49J- 29	4
121128-1	53 - 4	2
121128-1	53A- 17	2
121743	49J- 32	8
121841	49J- 25	6
12257-24	48 - 52	1
12257-24	48A- 53	1
124545	49J- 53	2
129002	12A- 34	2
13C000BEP3	31	1
130000BEP3	31	1
130000BEP3	32	6
13C000BEP3	32	8
130000BEP3	32	8
130000BEP3	33	2
13C000BEP3	33	2
130000BEP4	31	1
130000BEP4	33	2
130000BEP4	33	2
130000BEP4	33	2
1300001BB12	33	2
130001BB12	32	1
130001BB2	31	1
130001BB2	31	1
130001BB2	31	1
130001BB2	32	4
130001BB2	32	4
13C001BB2	33	2
130001BB2	33	2
130001BB2	33	1
130001BB2	33	2
13C001BB6	33	1
130001BB8	32	1
13C001BB8	32	1
13C001BB8	33	1
▫13C006A1032	11B	2
13C006A428	63	6
▫130010	13C- 41	8
▫130010	13D- 6	4
▫130010	13E- 6	4
▫130066-3	7 -	2
▫130071	6 - 23B	2
▫130400	11 - 26	1
130411-0090	70 - 5	1
130411-00900	69 - 4	1
130498C19-39	13D	2
130498C19-39	13E- 27	2
130569	13D- 53	2
130569	13E- 30	2
130598	7	1
130728	6 - 1A	1
130741	7	1
132688	49J- 34	4
132906	49D	1
▫133A3	62A- 73	2
▫133B3	62A	2
133176	49D	1
134A1	62A- 75	2
▫13621XL	37B- 7	2
▫13621XL	37B- 9	2
▫13685XL	37B- 1	4

PART NUMBER	FIGURE & INDEX NO.	QTY. PER ART.
▫138-2	63 -118	1
▫13830	37A- 17	2
▫13830	37A- 21	2
▫13830	37A- 28	2
▫13830	37A- 33	2
▫13830	37B	2
▫13830	37B	2
▫13830	37C- 8	2
▫13830	37C- 15	2
▫13836	37I- 22	2
▫13836	37I- 24	2
▫13889	37A- 3	2
▫13889	37A- 8	2
▫13889	37A- 23	4
▫13889	37B	4
▫13889	37I- 27	4
▫1388976	37C- 2	4
14028-1	61	2
14028-2	61	2
145-20	37I- 20	4
▫1495	60	1
15-124	71	1
▫15-338B	7	1
▫150PDL12	61C- 45	3
▫150PL8	61C- 65	2
1501842	61	2
▫151	63 - 18	1
151-19	37I- 21	2
1515642	61B- 14	2
1518897	61	2
152-17	37I- 23	2
▫153-15	37I- 32	2
▫153-9	37I- 28	4
▫154-13	37I- 31	2
▫154-14	37I- 29	2
▫156-10	61B- 48	13
▫156-10	63 - 31F	2
▫1560615	62 - 68	2
▫1560615	62A- 90	2
1579	48B- 21	1
1580-2	48B- 7	1
1581-37	48B	1
1591	48B- 10	1
16XXXX	36A	2
1604-40	47 - 18	8
▫161-23	37I	2
▫162-21	37I	2
1636-6A-B1	61 - 26	1
▫164-27	37I- 25	2
▫168-3	67 - 90	1
▫168-3	68 - 53	1
168-3	70 - 4	1
▫1680	61C	1
▫169-380021-11	63 - 28	1
▫169-380021-9	63 - 30	1
1691C	49B- 16	4
1729	36 - 44	3
1729	36A- 39	6
▫1729	37 - 34	6
▫1729	38 - 23A	2
1729	41 - 45	2
▫1729	41A- 17	1
▫1729	41A- 26	1
▫1736	44 - 32	1
▫1736	44 - 35	1
▫1736	44 - 42	1
177718	49D	1
▫18-300001	64 - 53	5
▫18-300001-1	64 - 55	5
▫18-300002	64 - 4	2
▫18-300009-11	64 - 7	1
▫18-300009-21	64 - 5	1
▫18-300009-23	64 - 20	1
▫18-300009-27	64	5
▫18-300009-29	64 - 24	1
▫18-300009-31	64 - 27	1
▫18-300009-31	64 - 39	2
▫18-300009-31	64 - 47	1
18-380021-3	61C	1
▫18-420016	67 - 70	1
18-534020-3	128	1
180B1	67 - 65	1
180004	49E- 7	2
▫180968	63 -104A	1
1810226	49I- 16	4
▫1819	63 - 37A	1
▫1819R	63 - 36	1
▫1819R	63 - 38	1
182194	49E- 26	2
182309	49E	2
182684	49E- 27	2
▫183-1	37I- 16	2
▫183946	8	1
1843646	49J- 37	4
184793	49E- 40	4
1850759	49J- 11	4
▫185678	8A- 5	1
1857412	49J- 39	4
1858751	49J- 19	2
1858753	49J	4
186-4	49C- 76	4
1861591	49J- 44	2
186283	49E- 28	2
118658	63 - 69	2
▫1870	47D- 31	2
187247	13B- 14	2
▫187247	13C- 18	4
187313	49D	1
187714-1	58 - 40	2
187714-1	58 - 44	2
187714-1	58A- 69	1
187714-3	58 - 60	1
1878183	49J	4
1878467	49H- 3	2
1878493	49H	2
1878493	49H	2
1878499	49H	6
1878502	49H- 19	6
1878503	49H- 22	6
1878504	49H- 9	2

PART NUMBER	FIGURE & INDEX NO.	QTY. PER ART.
1878505	49H- 14	4
1878507	49H- 21	4
1878516	49H- 17	8
1878517	49H- 4	2
1879663	49H- 10	6
188036	49E	2
1880781	49J- 23	6
1881409	49J- 43	4
1881835	49I- 17	4
1881843	49I- 28	2
1881865	49I- 3	2
1881870	49I- 4	2
188302	49E- 16	2
1883864	49J	4
188434	49E- 30	2
1885058	49I- 15	4
1886496	49J- 35	6
1886684	49J- 45	2
1886684	49J- 46	2
1886685	49J	4
1888439	49J- 27	2
▫189	49 - 11	2
189482	49E- 32	12
189522	49E- 29	2
▫189717	49 - 41	2
▫189717	49C- 41	2
189739	49E- 33	14
189880	49E- 31	2
1902746	49J- 42	4
1903720	49J- 10	4
1904377	49H- 13	4
1904377	49J- 24	4
1904661	49J- 28	8
190576	49E	2
1906974	49J	4
1906984	49J- 9	4
190733	49E- 41	6
190734	49E- 21	12
1908680	49J- 20	4
1908839	49J- 4	2
1908843	49J- 13	2
1908999	49J- 8	2
1909159	49J- 18	2
1910131	49J- 22	2
1910179	49H- 8	2
1910180	49H- 7	2
1910359	49J	2
1910862	49I-1,2	2
1911961	49J	4
1912159	49H- 11	2
1912176	49H- 6	4
1914186	49J	2
1914198	49J	2
1914618	49J- 21	4
1917288	49J- 2	2
1918004	49J	4
191869	49E- 42	2
192103	49E- 37	2
1922408	49H- 12	2
1922599	49H- 20	4
192315	49E- 1	2
192316	49E	2
1924764	49H- 16	4
1925832	49J- 5	2
1927844	49J- 16	2
1928648	49J- 1	2
1929703	49J	2
1930314	49J	2
1930694	49I- 18	4
1931886	49H- 1	2
1931887	49H- 2	2
1933101	49H	2
1933104	49H	2
1933239	49H- 5	2
193385	49E- 43	2
1935548	49J- 31	2
1938522	49H- 15	6
1938637	49I- 12	2
1938731	49I- 10	2
1938732	49I- 7	2
1938736	49I- 6	2
1938737	49I- 8	2
1938741	49I- 11	2
193902	49D	1
1939405	49I- 5	2
1943385	49H- 18	6
1945098	49J	2
1945099	49J- 3	2
1945101	49J	2
1945105	49J	2
1945106	49J	2
1945109	49J	2
1948704	49I- 9	2
1954	14A-116	3
1954	14A-118	3
196000	49E	4
2-1544-84	62	2
▫2-2844-75	62 - 65	2
2A20580	14C- 14	4
▫20-0041	60 - 35	1
200CC	49C- 47A	2
200242	49J- 52	4
200362	49J	8
▫200661	68 - 60	1
▫203886-2	62 - 38	2
▫203886-2	62A- 88	2
204864	49E- 44	2
206336	49E- 34	2
206337	49E- 45	2
2068-265	488	1
207-16C	49F- 19	2
▫207-400301-00-	60	2
0617	60	
210022	49E- 4	2
210023	49E- 5	2
210031	49E- 47	2
210034	49E- 10	2
210035	49E- 48	2
210036	49E- 35	2
210044	49E- 12	2

PART NUMBER	FIGURE & INDEX NO.	QTY. PER ART.
210067	49E- 49	2
210100	49E- 22	2
210101	49E- 23	2
210109	49E- 13	2
210111	49E- 9	2
210112	49E- 39	4
210123	49E- 3	2
210124	49E- 6	2
210146	49E- 11	2
210195	49E-	2
210284	49E- 2	16
210300	49E	2
◻210360	49 - 27	2
◻210360	49A- 20	2
◻210360	49C- 18	2
2104	10 - 70	1
21051C	69 - 20	4
◻212 FLASHLIGHT	7	1
2140-54	57D- 28	2
2163	63	2
2178	12 - 1	4
218036	49E- 38	4
218537	49E- 25	2
22	14	12
22	14	3
22	14	3
22A17-02	58 - 18D	1
◻22A17-02	58A	1
22A21-6-02	10	4
22A3-82	29	4
22K1-02	35	2
◻22K1-048	13C	2
◻22K2-02	13D	4
◻22K2-02	13D	2
◻22K2-02	13E	4
22NA17A022	65	1
22NA21-02	13B	40
223003	49E- 36	2
2238-14	48B- 40	1
2240-14	48B	1
22427-1	64A- 25B	1
◻23S2004-1-1	67 - 6	1
◻23S2004-1-2	67 - 7	1
◻23S2004-10-1	67	1
23S2004-10-2	67	1
◻23S2004-10-2	68 - 22A	1
◻23S2004-10-2	70 - 2	1
23S2004-13-1	67	1
◻23S2004-13-1	68 - 22	1
23S2004-13-1	69 - 3	1
◻23S2004-13-1	70 - 1	1
23S2004-13-2	69	1
◻23S2004-2-1	67 - 4	1
◻23S2004-2-2	67 - 5	1
◻23S2004-3-1	67 - 2	1
◻23S2004-3-2	67 - 3	1
◻23S2004-4-1	67 - 1	1
◻23S2004-5-1	67	1
◻23S2004-5-1	68 - 16	1
23S2004-5-1	69 - 67	1
◻23S2004-5-1	70 - 34	1
◻23S2004-5-2	67	1
◻23S2004-5-2	68	1
23S2004-5-2	69	1
◻23S2004-5-2	70 - 35	1
23S2004-6-1	67	1
◻23S2004-6-1	68 - 17	1
23S2004-6-1	69 - 77	1
◻23S2004-6-1	70 - 36	1
231 MIRROR	14C- 91	1
232811-3	68 - 40	2
◻2373	47D- 2	2
◻2373	47D- 32	2
◻2373	47D- 40	2
◻24C54	7	1
◻24555-7	64A- 26	1
24567-1	64A- 25A	1
24837-11	64A- 7	3
24838-1	64A- 9	2
2505	58 -147	1
◻2505	58A-100	1
◻2505	63 - 37	1
◻2505	63 - 37B	1
◻2505	63 - 39	1
2520387	49D	1
2520625	49D	1
2520626	49D	1
2520631	49D	2
2520632	49D	2
2520635	49D	1
2520636	49D	1
2520646	49D	1
2520647	49D	1
2520650	49D	1
2520652	49D	1
2520692	49D	1
2520872	49D	1
2520873	49D	1
2520874	49D	1
2520875	49D	2
2520876	49D	1
2520878	49D	1
2520879	49D	1
2520880	49D	1
2520881	49D	1
2520882	49D	1
2520884	49D	1
2520886	49D	1
2520887	49D	1
2520888	49D	1
2520890	49D	1
2520891	49D	1
2520892	49D	1
2520893	49D	1
2520894	49D	1
2520895	49D	1
2520920	49D	1
2521144	49D	1
2521145	49D	1
2521196	49D	1

PART NUMBER	FIGURE & INDEX NO.	QTY. PER ART.
2521287	49D	1
2521566	49D	1
2521738	49D	1
2522021	49D	1
2522022	49D-	1
2522158	49D	1
2522267	49D	1
2522271	49D	1
2522272	49D	1
2522273	49D-	1
2524147	49D-	1
254-160801-00-	60	1
0101	60	
268P 1/4X3/8	68 - 1	2
◻268P1/4-1/8	62B- 46	1
◻26875-48	64A- 16	1
269P1/4-1/8	71 - 20	2
◻271P1/4-1/8	62B- 48	1
271P1/4-1/8	71 - 21	2
28313-11	64A	1
28314-11	64A	5
2850-9	48B- 38	14
2940-2	48B- 37	1
2951-11	48B- 24	1
295158-56	58 - 18C	1
295300	12A- 13	2
295460-3-5	12A- 12	2
◻295846-1	51	64
◻295927-56	58A- 21	1
296-2	48B- 27	2
297-6	48B- 28	2
299-6	48B- 26	2
◻3 OHM 10 WATT	63 - 61L	1
3/16IDX1/16WALL	64A- 83	AR
◻3AG312500	63 - 63C	4
◻3D1247	67 - 61	1
3D1312	67 - 72	1
3D1313	67 - 89	1
3D1347	67 - 57	1
◻3D1348	67 - 48	1
3D1349	67 - 52	1
3D1473	67 - 85	1
3D1542-03	69 - 29	2
3D1549-02A1	69 - 12	2
3P-194FA	49	2
◻3XSK8720-	24 - 2	2
63-5/16	24	
30-15	61C- 86	1
30-66	37	2
◻30-66	37I-	2
◻30C57	7	1
◻300-3TTM	64A- 27	1
◻300-8-2	64A- 29	1
◻300-911-930	7 - 10	1
3003	9A	1
◻3005A1	62A	2
3006 BOLT	9A	1
302D	36 - 28	2
302D	36A- 27	2
◻302D	37 - 43	2
302D	41 - 34	1
◻3020	41A- 42	1
◻3023	37I- 33	4
◻303	47D- 10	2
◻303	47D- 23	1
◻303 BULB	47C- 34	5
◻303 BULB	63 - 95	6
◻3052	63 - 61D	4
◻3052	63 - 61G	4
◻3052	63 - 61K	1
◻3052	63 - 61N	2
306-12	48B- 34	1
31-408	25 - 19	2
31-408	25A- 9	2
◻313	63 - 39C	1
313B38	48B	1
313005	63	2
315-S-5	49D	1
315-S-5	49D	1
3153-00-1	48 - 52	1
316	42 - 43	4
31901	25	2
31902	63 - 56	2
31903	25	1
◻31903	63 - 57	2
32-425-10	49G- 3	2
32-425-4	49G- 2	2
32-425-5	49G- 9	2
32-425-6	49G- 10	2
32-425-7	49G- 1	2
32-425-8	49G- 4	2
◻32-436	49 - 47	2
32-436	49G-	2
32-436-1	49G- 8	2
32-436-2	49G- 5	2
32-436-3	49G- 6	2
32-436-9	49G- 7	2
◻32FE524	37A- 24	12
320-62-5.06S	48 - 5	1
320-62-506S	48A- 5	1
◻32445	58A	1
◻327	60	1
◻327	61C- 57	7
327	61C	1
◻327	63 - 39A	4
◻327	63 - 39B	2
◻327	64A	1
329B4	48B- 16	1
33-130000-11	21A- 20	2
33-130000-17	21A- 21	2
33-130000-19	21A- 22	2
33-130000-3	2	1
33-130000-7	21A- 17	2
33-130000-9	21A- 19	2
33-199-1	57H- 7	2
33-199-106	57H	2
33-199-28	57H	2
33-199-45	57H	2
33-199-5	57H- 3	2
33-199-6	57H- 4	4

PART NUMBER	FIGURE & INDEX NO.	QTY. PER ART.
33-199-7	57H- 5	2
33-199-8	57H- 6	2
33-199-906	57H- 1	2
33-199-907	57H- 2	2
33-199-909	57H	2
33-199-910	57H	2
◻33-324032	6 - 10A	1
◻33-324032	14C- 60	1
33-340000-61	14B-107	1
33-410010-1	11	1
◻33-410010-2	11	1
33-410010-3	11	1
33-410010-4	11	1
33-410040-4	12C- 24	2
33-530000-57	14A	1
33-530000-57	14B- 96	1
33-530000-57	14C	1
33-530002-77	14B-103	2
33-530003-107	14D-105	2
33-530003-135	14D-104	4
33-530003-137	14D-103	2
33-530003-89	14D- 72	1
33-534010-13	12C- 19	2
33-534010-21	12C- 21	4
33-534010-33	12C- 11	2
◻33-534010-33	13C- 9	2
33-534015	14A	1
33-534015-1	14A	1
33-534015-2	14A	1
33-534015-3	14A- 91	1
33-534015-4	14A- 94	1
33-534015-7	14C- 87	1
33-534015-7	14D- 92	1
33-534015-8	14C	1
33-534015-8	14D	1
33-534015-9	14D	1
33-534018-1	14B-104	2
33-534024-19	14D	2
33-534027-11	13D- 49	2
33-534027-11	13E- 34	2
33-534042-1	14D- 90	5
33-940000-9	54 - 35	1
338491	49D	1
34CB759	14C- 42	2
34CB759	14D- 74	2
342617	49D	1
34810A	49	2
◻35-000061	6 - 21	1
35-000064-1	6	2
35-000064-3	6	2
35-000064-45	6	2
35-001052	14C	1
35-050084-21	12 - 21	2
35-050084-23	12 - 22	2
35-105005-10	18 - 1	1
35-105005-11	18	1
35-105005-12	18 - 3	1
35-105005-15	18	1
35-105005-8	18 - 2	1
35-105005-9	18	1
35-105110	18 - 4	1
35-105110-1	18	1
35-105111	18 - 9F	2
35-115034	19A- 43	1
35-115034-1	19A	1
35-115035	19 - 52	1
35-115035	19A- 42	1
35-115035-1	19	1
35-115035-1	19A	1
35-115046	19A- 38	1
35-115046-1	19A	1
35-115071-10	18 - 41	2
35-115071-12	18 -	2
35-115147	18	2
35-115147-2	18 - 37	2
35-115166-14	19A- 35	2
35-115166-18	18 - 16	1
35-115166-19	18	1
35-115194-38	19 - 13	1
35-115194-40	19	1
35-115199-12	18 - 50	1
35-115200-20	19 - 11D	2
35-115200-20	19A-110	2
35-115200-22	19 - 11C	2
35-115200-22	19A-109	2
35-115200-24	19 - 11B	2
35-115200-24	19A-108	2
35-115200-26	19 - 11A	2
35-115200-26	19A-107	2
35-115200-42	18 - 48	3
35-115200-42	18	2
35-115211-9	2	1
35-115256	18 - 45	1
35-115383-2	19A- 79	1
35-115383-3	19A	1
35-115431-10	19A	1
35-115431-100	2 - 10	1
35-115431-107	2 - 11	1
35-115431-108	2 - 12	1
35-115431-109	19A- 50	1
35-115431-110	19A	1
35-115431-111	19A- 51	1
35-115431-112	19A	1
35-115431-113	19A- 48	1
35-115431-114	19A	1
35-115431-115	19A- 49	1
35-115431-116	19A	1
35-115431-117	19A- 52	1
35-115431-118	19A	1
35-115431-23	19A- 56	1
35-115431-24	19A	1
35-115431-27	19A- 57	1
35-115431-28	19A	1
35-115431-29	19A- 59	1
35-115431-30	19A	1
35-115431-33	19A- 60	1
35-115431-34	19A	1
35-115431-39	19A- 53	1
35-115431-40	19A	1
35-115431-5	19A- 37	1

PART NUMBER	FIGURE & INDEX NO.	QTY. PER ART.
35-115431-6	19A	1
35-115431-7	19A- 64	1
35-115431-8	19A	1
35-115431-83	19A- 46	1
35-115431-84	19A	1
35-115431-9	19A- 63	1
35-115431-91	19A	1
35-115431-92	19A	1
35-115431-99	2 - 9	1
35-135025	21 -	1
35-135025-10	21A- 14	2
35-135025-2	21A- 9	8
35-135025-20	2	2
35-135025-20	3	1
35-135025-24	21 - 5	1
35-135025-26	21 - 3	1
35-135025-32	21A- 7	2
35-135025-36	21A- 6	2
35-135025-6	2	1
35-160025-1	24	1
◻35-160025-3	24 - 14	1
◻35-160025-5	24 - 16	1
35-160025-7	24 - 20	1
35-165004	18 - 71	4
35-165004	22 - 11	REF
35-165004	22A- 32	4
35-165050-30	22 - 4	1
35-165050-30	22A- 12	2
35-165050-31	22	1
35-165050-31	22A	2
35-165050-34	22 - 5	1
35-165050-34	22A- 6	2
35-165050-35	22	1
35-165050-35	22A	2
35-165050-40	22 - 6	2
35-165050-40	22A- 11	2
35-165050-605	22 -	1
35-165050-606	22	1
35-165050-62	22A- 13	2
35-165050-63	22A	2
35-165050-64	22A- 7	2
35-165050-65	22A	2
35-165050-78	22	1
35-165050-79	22	1
35-165050-84	22A- 10	2
35-165051-8	2	1
35-165051-8	3	1
35-165051-9	2	1
35-165051-9	3	1
35-324091	62	1
35-324092	62	1
35-324093	62	1
35-324098	62 - 20	1
35-324098	62A- 18	1
35-324204	15	1
35-324204	15	1
◻35-324204	61C- 6	1
35-324323-7	62A- 19	1
35-324365-9	61B- 11	2
35-324365-9	61C- 16	2
◻35-344146	63 - 87	1
◻35-344147	63 - 89	1
◻35-344152	47C- 28	1
◻35-344152	63 - 83	1
◻35-344158	47C	1
◻35-344158	63	1
◻35-344169	47C- 27	1
◻35-361016	6 - 6	2
◻35-361016-1	6 - 7	1
35-361025	63	1
◻35-361109	62 - 3	1
◻35-361109	62A- 3	1
35-361132	36	1
35-361132-1	36 - 80	1
35-361132-1	36A- 81	1
◻35-361132-1	37 - 83	1
35-361133	37 - 85	1
35-361134	36 - 74	1
35-361134	36A- 76	1
◻35-361134	37 - 78	1
35-361135	36	1
35-361135	36A- 70	1
◻35-361135	37 - 72	1
35-361136	36 - 73	1
35-361136	36A- 75	1
◻35-361136	37 - 77	1
35-361139	36 - 82	1
35-361139	36A- 83	1
35-361145	36 - 84	1
35-361145	36A- 85	1
◻35-361145	37 - 66	1
35-361150	36 - 75	1
35-361150	36A- 77	1
◻35-361150	37 - 79	1
35-361153	36 - 79	1
35-361153	36A- 80	1
◻35-361153	37 - 82	1
◻35-364022	47C- 57	1
◻35-364022	47D- 12	1
◻35-364022	63 - 91	1
35-364050	61	1
◻35-364123-1	63	1
◻35-364126	63 - 42A	1
35-364127	38 - 2	1
35-364130	38 - 3	1
35-364137	63 - 43	1
35-364151-1	25A- 20	1
35-364151-11	25A- 5	2
35-364151-13	25A- 6	2
35-364151-15	25A	2
35-364151-17	25A- 33	1
35-364151-21	25A- 11	2
35-364151-23	25A- 37	1
35-364151-25	25 - 18	2
35-364151-25	25A- 7	2
35-364151-27	25A- 39	2
35-364151-29	25A- 13	1
35-364151-3	25 - 16	1
35-364151-3	25A- 2	1
35-364151-31	25A- 30	1

PART NUMBER	FIGURE & INDEX NO.	QTY. PER ART.
35-364151-33	25A- 23	1
35-364151-35	25A- 21	1
35-364151-41	25A- 10	2
35-364151-43	25A- 14	1
35-364151-45	25A- 24	1
35-364151-47	25A- 32	1
35-364151-49	25A- 35	1
35-364151-5	25A- 38	1
35-364151-51	25A	1
35-364151-57	23	1
35-364151-57	25A-	1
35-364151-7	25A	1
35-364151-9	25A- 28	1
35-364171-3	71 - 29	1
35-364238	63 - 44	4
◻35-364247	63 - 41	4
35-380004-1	14 - 2G	1
35-380004-1	61 - 32	REF
35-380004-5	14A-107	1
35-380013	14 - 17	2
35-380014	14 - 34	2
35-380015	14	1
35-380016	14 - 36	1
35-380019	11	1
◻35-380019-1	11 - 8	1
◻35-380019-3	11	1
◻35-380019-3	11B- 9	1
◻35-380019-3	61C- 73	1
35-380019-5	61C- 88	1
35-380020-1	36A- 21	2
◻35-380020-1	37 - 49	2
◻35-380020-3	41A- 51	1
35-380029-1	61C- 35	1
35-380039	61A- 8	1
◻35-380039-1	61B- 20	1
◻35-380043-1	61B- 19	1
◻35-380043-1	61C- 31	1
◻35-380044	61B- 18	1
◻35-380044-1	61C- 36	1
◻35-380051-3	47D- 57	1
◻35-380052	63	3
35-380052	69 - 70	1
35-380052	71 - 7	1
35-380053-11	71 - 6	1
35-380053-5	69 - 71	1
35-380053-7	61C- 84	2
◻35-380053-7	63	2
◻35-380053-9	63	1
◻35-380055-1	58A- 89	1
◻35-380055-3	58A- 90	2
35-380060-11	60	1
35-380060-19	60	1
35-380060-20	60	1
35-380060-21	60	1
35-380060-23	60	1
◻35-380060-27	60	1
35-380060-9	60 - 9	1
◻35-380065-1	58A-122	1
35-380087-1	71 - 36	1
35-380090	71 - 33	1
35-380092-11	71 - 18	1
35-380092-25	71 - 17	1
35-400008	10 - 5	1
35-400008-12	10	1
35-400008-8	10	1
35-400010-32	10 - 2	1
35-400010-34	10 - 9	1
35-400010-36	10 - 7	1
35-400010-42	10	1
35-400010-56	3 - 56	1
35-400010-56	4 - 38	1
35-400010-56	4A- 35	1
35-400010-56	4	1
35-400010-6	10	1
35-400013	10 - 16	1
35-400014-613	10	1
35-400014-613	10	1
35-400018	10 - 4	1
35-400018-12	10	1
35-400018-8	10	1
35-400031	10 - 17	1
35-400032-2	10 - 11	1
35-400033	10 - 18	1
35-400041	10 - 87	1
35-400044	10 - 21	1
◻35-400213	8 - 71	1
◻35-400298	11	4
35-400320-15	10	1
35-400320-32	10 - 22	1
35-400320-36	10	1
35-400320-54	10 - 91	1
35-400320-56	10 - 92	1
35-400395	10 - 77	1
35-400404	10 - 14	1
35-400405-3	10	1
35-400414	10 - 89	1
35-400417	10 - 85	1
35-400434	10 - 73	1
35-400435	10 - 75	1
35-400461	10 - 84	1
35-400462	10 - 80	1
35-400464-4	10 - 79	1
35-400464-6	10	1
35-400464-8	10	1
35-400465	10 - 71	1
35-400467-3	10 - 72	1
35-400472	10	1
◻35-410000-92	11 - 55	1
◻35-410000-93	11	1
◻35-410000-94	3 - 7	1
35-410000-94	4 - 14	1
35-410000-94	4 - 37	1
◻35-410000-94	11 - 53	1
35-410000-94	4	1
◻35-410000-95	3 - 35	1
◻35-410000-95	11	1
◻35-410000-96	11 - 56	1
◻35-410000-97	11	1
◻35-410000-98	11 - 54	1
◻35-410000-99	11	1

PART NUMBER	FIGURE & INDEX NO.	QTY. PER ART.
◻35-410038-124	8 - 53	1
35-410070-10	9 - 3	1
35-410070-12	9	1
35-410070-12	9	1
35-410070-14	9 - 2	1
35-410070-14	9A- 1	1
35-410070-48	9 - 8	1
◻35-410070-606	9 - 1	1
◻35-410070-65	9	1
◻35-410070-67	9	1
◻35-410070-75	9	2
◻35-410070-77	9 - 12	1
35-410070-79	9	1
35-410070-93	9	1
35-410075	9A- 28	1
35-410077-12	45 - 10	2
35-410094-10	14A- 17	1
35-410152	8 - 55	1
35-410153	8 - 54	1
35-410154	8 - 50	1
35-410154-1	8 - 47	1
◻35-410154-3	8 - 51	1
◻35-410154-3	47D- 46	1
35-410156	8 - 52	1
35-410160-32	9A- 23	1
35-410160-38	16 - 6	1
35-410169 B-C	6 - 3	2
35-410169 W-C	6	2
◻35-410180-14	9 - 17	1
◻35-410180-14	9A- 44	1
◻35-410214	9	1
◻35-410214-5	9 - 9	1
◻35-410214-5	9A- 3	1
35-410215-5	5 - 4	1
35-410215-5	5	1
35-410231	8 - 40	1
35-410241	16	1
35-410241-12	16 - 1	1
35-410242	16 - 4	2
35-410243	16 - 8	3
35-410244	16	1
35-410244-2	16 - 15	1
35-410245	16 - 7	1
35-410246	16 - 20	1
35-410247	16 - 12	4
◻35-410247	49	2
35-410248	16 - 14	1
◻35-410259-16	4A- 73	1
35-410271	16 - 10	1
35-410286 B-C	6 - 2	2
35-410286 W-C	6 - 2A	2
◻35-410291-108	11 - 6	1
◻35-410291-11	11	1
35-410291-112	11 - 26	1
◻35-410291-146	11	1
35-410291-147	11	1
◻35-410291-164	11	1
◻35-410291-165	11	1
◻35-410291-170	11	1
◻35-410291-175	11 - 29	1
◻35-410291-18U	11 - 33	2
◻35-410291-183	11	1
◻35-410291-183	11B- 12	1
◻35-410291-183	61C	1
◻35-410291-185	11	1
35-410291-187	11	1
35-410291-187	11B- 11	2
35-410291-187	61C	1
35-410291-199	11	1
35-410291-201	11	1
35-410291-203	11	1
35-410291-205	11	1
◻35-410291-44	11 - 3	1
◻35-410291-46	11 - 5	1
◻35-410291-52	11 - 32	2
◻35-410291-626	11	1
◻35-410291-628	11 -	1
◻35-410291-650	11	1
35-410291-652	11	1
◻35-410291-72	11 - 51	1
◻35-410291-73	11	1
35-410291-76	11 - 29	1
◻35-410291-8	11 - 1	1
◻35-410291-80	11 - 11	1
◻35-410291-81	11	1
◻35-410291-88	11 - 15	1
◻35-410291-90	11 - 25	1
◻35-410291-98	11 - 35	2
35-410315	10 - 94	16
◻35-410315	11 - 13	7
◻35-410315	11 - 31	19
◻35-410315	11B- 3	14
◻35-410315	11C- 2	15
◻35-410316	11 - 43	1
◻35-410316-1	11	1
◻35-410317	11 - 46	4
◻35-410318	11 - 16	1
◻35-410321-1	11 - 27	1
◻35-410323	11 - 45	2
◻35-410324	11 - 17	1
◻35-410325	11 - 21	1
◻35-410326	11 - 28	1
◻35-410329 B-C	11 - 52	2
◻35-410329 W-C	11	2
◻35-410432	9 - 5	1
35-410434	16 - 29	1
35-410452-179	4A	1
◻35-410452-3	3 - 32	1
35-410452-3	4 - 34	1
◻35-410452-3	4A- 33	1
35-410452-3	4	1
◻35-410452-43	3 - 49	1
35-410452-43	4	1
◻35-410452-45	3 - 50	1
35-410452-45	4	1
◻35-410452-73	3 - 5	1
35-410452-73	4 - 12	1
◻35-410452-73	4A- 19	1
35-410452-73	4	1
35-410452-75	3 - 6	1

PART NUMBER	FIGURE & INDEX NO.	QTY. PER ART.
35-410452-75	4 - 13	1
35-410452-75	4A- 20	1
35-410452-75	4	1
¤35-410452-9	3 - 34	1
35-410452-9	4 - 36	1
¤35-410452-9	4A- 36	1
35-410452-9	4	1
35-410455-1	47D- 47	1
35-410456	10	1
35-410456-1	10	1
35-410456-11	10 - 51	1
35-410456-13	10 - 68	1
35-410456-17	10 - 53	1
35-410456-17	10 - 57	1
35-410456-19	10	1
35-410456-21	10 - 48	1
35-410456-27	10 - 62	1
35-410456-29	10 - 66	1
35-410456-3	10 - 42	1
35-410456-31	10 - 46	1
35-410456-5	10 - 59	1
35-410456-601	10	1
35-410456-7	10 - 56	1
¤35-410457	6 - 26	1
¤35-410465-1	11 - 13A	1
¤35-410474-29	11B	1
35-410474-31	11B- 1	1
35-410474-39	11B	1
35-410474-41	11B-	1
35-410474-49	11B- 2	1
¤35-410474-49	11C- 3	1
35-410474-50	11B	1
¤35-410474-50	11C	1
¤35-410474-53	11B- 10	1
¤35-410474-53	61C	1
35-410474-55	11B- 8	1
35-410474-56	11B	1
¤35-410474-57	11B	1
35-410474-59	11B	1
¤35-410474-65	11B- 13	1
35-410474-67	11B- 14	1
¤35-410476-1	11B- 5	1
¤35-415309-1	11 - 42	1
¤35-415309-2	11	1
¤35-415310-1	11 - 48	1
¤35-415310-2	11	1
¤35-415311-1	11 - 49	2
35-415312-3	11 - 37	1
35-415312-4	11	1
35-415380-22	14A- 98	1
35-415380-22	14C- 88	1
35-415380-22	14D- 16	1
¤35-415416	9 - 4	1
35-424125-2	58 - 11	1
¤35-5010-1	29 - 18	2
35-521152	31	2
35-521152-4	31 - 40	2
35-521158	31	1
35-521158-1	31	1
35-521158-2	31 - 47	1
35-521158-3	31	1
35-521186	31 - 52	2
35-521187	31 - 39	2
35-521190	31 - 51	2
¤35-521213	24 - 1	2
¤35-521215	24 - 12	2
35-521227	25 - 4	1
35-521227	25A- 29	1
¤35-521229	24 - 3	2
¤35-521230	24 - 6	7
¤35-521230-2	24 - 5	2
35-524003	32 - 9	1
35-524011	35 - 14	2
35-524028	58 - 49	1
35-524028	58 - 71	1
35-524028	58 - 84	1
¤35-524028	58A- 77	1
35-524038	59 - 14	1
35-524047	59 - 11	2
¤35-524048	60 - 14	1
¤35-524051-1	60 - 12	1
35-524060	35	2
35-524060-1	35	2
35-524060-2	35 - 18	2
35-524060-3	35	2
35-524066	35	4
35-524066-2	35 - 12	4
35-524087-6	60 - 1	1
¤35-524095	60 - 21	1
¤35-524096	60 - 22	1
35-524125	58	1
35-524125	58A- 79	1
35-524125	61C- 39	1
35-524136	35 - 9	1
35-524136	35 - 49	1
35-524137	35	1
35-524137-2	35 - 5	1
35-524138	35	1
35-524138-2	35 - 6	1
¤35-524139	60	2
¤35-524139	60	4
35-524139-1	60 - 26	2
35-524140-2	60 - 23	2
35-524140-4	60 - 24	2
¤35-524141	60 - 17	2
35-524143-2	35	1
35-524143-6	35 - 30	1
35-524144	35 -	1
35-524144-8	35 - 2	1
35-524170	35 -	2
35-524170-1	35	2
35-524170-2	35 - 26	2
35-524170-3	35 - 27	2
35-524171	35 - 29	2
35-524175	31 - 34	2
35-524183	35	2
35-524183-2	35 - 37	2
¤35-524197	58	1
35-524197-2	58 - 14	1
35-524230	59	1

PART NUMBER	FIGURE & INDEX NO.	QTY. PER ART.
35-524230-2	59 - 3A	3
35-524231	59 - 1	1
¤35-524238-12	60 - 18	1
¤35-524238-4	60 - 19	1
35-524240	59 - 7	6
¤35-524241	60 - 5	1
¤35-524241	60	2
35-524258	35 - 3	2
35-524261-8	60 - 2	1
¤35-524262-1	60 - 13	1
35-524264	58 - 13	3
35-524269	59 - 8	3
35-524274	59	1
35-524274-4	59 - 4	1
35-524275	35 - 35	8
35-524275-1	35 - 36	4
35-524300	35 - 22	1
35-524301	35 - 21	1
35-524308	35 - 48	4
35-524309	31 - 5A	1
35-524314-10	31 - 32	1
35-524321	33 - 5	2
35-524349	59 - 10B	1
35-524367	35	1
35-524367-1	35	1
35-524367-2	35 - 43	1
35-524367-3	35	1
35-524368	35	1
35-524368-2	35	1
35-524553	58 - 94	2
35-524553	58A-107	1
35-524554	58 - 96	1
¤35-524554	58A-108	1
35-524584	58 - 67	1
¤35-524584	58A- 74	1
¤35-524585-19	60	1
35-524585-25	60	1
¤35-524585-651	60 -	1
¤35-524587	60	1
¤35-524587-2	60 - 27	1
35-524641	35 - 16	2
¤35-524645-1	60 - 28	1
¤35-524656-5	60	1
35-524656-651	60	1
35-524656-9	60	1
35-534052	14 - 52	1
35-534052	14A-114	1
35-534052	14B- 78	1
¤35-534052	14C- 61	1
35-534052	14D- 94	1
¤35-534057-8	11 - 41	4
¤35-534061	11 - 38	4
¤35-534063	11 - 44	4
¤35-534064	11 - 40	4
35-534067	14 -	1
35-534067-2	14	1
35-534079-14	14B- 98	2
35-534079-2	14B- 99	2
35-534079-2	14D-108	2
35-534079-22	14D-109	2
35-534079-24	14A-104	2
35-534079-24	14B	2
35-534079-4	14D-110	4
35-534090	14D	2
35-534090-16	14B-101	1
35-534090-16	14D- 99	2
35-534090-17	14B-102	1
35-534090-17	14D	2
35-534090-2	14B-100	1
35-534090-2	14D- 97	2
35-534090-24	14D-1S	2
35-534090-26	14A-106	2
35-534090-26	14B	1
35-534090-4	14D- 98	2
35-534098	14D	1
35-534157	13 - 5	16
35-534191-11	14A- 65	1
35-534191-15	14D-111	1
35-534201-2	14A- 7	1
35-534201-2	14B- 60	1
35-534201-2	14D- 78	1
35-534201-3	14A- 33	1
35-534201-3	14B- 27	1
35-534201-3	14D- 42	1
35-534202-2	14A- 9	1
35-534202-2	14B- 61	1
35-534202-2	14D- 77	1
35-534202-3	14A- 31	1
35-534202-3	14B- 26	1
35-534202-3	14D- 43	1
35-534213	13 - 2	3
35-534213	13A- 2	3
35-534220	14C	1
35-534220-27	14 - 73	2
35-534220-27	14A-125	2
35-534220-27	14B-116	2
35-534220-27	14C- 94	2
35-534221	14C	1
35-534221-15	14 - 72	1
35-534221-15	14A-124	1
35-534221-15	14B-115	1
35-534221-15	14C- 95	1
35-534222	14C	1
35-534222-15	14 - 74	1
35-534222-15	14A-126	1
35-534222-15	14B-117	1
35-534222-19	14C- 96	1
35-534242	14 - 29	4
35-534242	14A- 18	5
35-534242	14A- 45	1
35-534242	14B- 11	5
35-534243	14	1
35-534243-1	14 - 67	1
35-534243-1	14A-121	1
35-534243-25	14A-120	1
35-534243-27	14A	1
35-534243-3	14 - 68	1
35-534244	14B- 69	1
35-534244	14D	1
35-534295	14	1

PART NUMBER	FIGURE & INDEX NO.	QTY. PER ART.
35-534295-1	14	1
35-534295-2	14	1
35-534295-3	14 - 39	1
35-534295-3	14A- 88	1
35-534295-5	14 - 37	1
35-534295-6	14 - 38	1
35-534300-112	14B- 25	1
35-534300-112	14C- 19A	1
35-534300-238	14 - 53A	1
35-534300-238	14A- 49	1
35-534300-308	14A- 63	1
35-534304-101	14 - 49	1
35-534304-103	14 - 50	1
35-534304-113	14 - 32	1
35-534304-121	14 - 55	1
35-534304-125	14- 6	1
35-534304-127	12A	1
35-534304-127	13A- 45	1
35-534304-127	14 - 4	1
35-534304-128	14 - 5	1
35-534304-139	14 - 12	1
35-534304-139	14A	2
35-534304-139	14B-	2
35-534304-141	14 - 14	1
35-534304-141	14A	2
35-534304-141	14B	1
35-534304-143	14 - 46	1
35-534304-147	14A	1
35-534304-149	14 - 18	4
35-534304-15	14 - 16	2
35-534304-53	14 - 33	1
35-534304-57	14 - 47	1
35-534304-642	14	1
35-534304-643	14	1
35-534304-79	14A- 95	1
35-534304-83	14 - 43	1
35-534304-93	14 - 56	1
35-534304-93	14A	1
35-534304-93	14B- 79	1
35-534304-93	14C- 39	1
35-534304-93	14D- 47	1
35-534304-95	14 - 45	1
35-534304-97	14 - 9	1
35-534304-99	14 - 44	1
35-534305-13	14A- 12	1
35-534305-13	14A- 41	1
35-534305-21	14 - 57	1
35-534305-35	14A- 39	1
35-534305-39	14B- 95	1
35-534305-39	14C- 56	1
35-534305-39	14D- 12	1
35-534305-41	14A- 40	1
35-534305-55	14A-102	8
35-534305-55	14B	4
35-534305-55	14C- 58	8
35-534305-63	14 - 48	1
35-534305-65	14A	8
35-534305-65	14B- 97	4
35-534305-65	14C	8
35-534305-9	14A- 11	1
35-534306-15	14	2
35-534306-17	14	2
35-534306-25	14 - 20	1
35-534306-31	14 - 54C	1
35-534306-31	14A- 99	1
35-534306-31	14B- 80	1
35-534306-9	14	1
35-534307-17	14	1
35-534307-18	14	1
35-534307-21	14	2
35-534307-23	14	2
35-534307-27	14	1
35-534307-43	14	2
35-534307-45	14	2
35-534307-49	14	1
35-534307-51	14	1
35-534307-53	14	2
35-534307-53	14	2
35-534307-57	14	1
35-534307-61	14	1
35-534307-63	14	1
35-534307-67	14 - 46A	1
35-534307-7	14	2
35-534308-13	14A	1
35-534309-17	14B- 92	1
¤35-534309-17	14C- 82	1
35-534313-5	14	1
35-534313-7	14	1
35-534313-9	14	1
¤35-534315	6 - 24	1
35-534315	14 - 10	1
35-534334-3	12	1
35-534334-4	12 - 13	1
35-534335-3	12	1
35-534335-4	12 - 12	1
35-534338	13	4
35-534340-11	14 - 35	1
35-534340-15	14	4
35-534340-15	14A-115	4
35-534360	13	1
35-534360-1	13 - 1	1
35-534360-601	13 -	1
35-534360-607	13	1
35-534360-71	13 - 12	1
35-534360-72	13	1
35-534360-73	13 - 4	1
35-534360-79	12A	1
35-534360-79	13 - 21	2
35-534360-79	13A- 46	1
35-534360-81	13 - 6	1
35-534361-32	12 - 24	2
35-534361-38	12 - 27	4
35-534364-1	14	1
35-534364-10	14 - 54B	1
35-534364-10	14	1
35-534364-11	14 - 58D	1
35-534364-12	14 - 58F	1
35-534364-13	14	1
35-534364-15	14	1
35-534364-17	14	1

PART NUMBER	FIGURE & INDEX NO.	QTY. PER ART.
35-534364-2	14	1
35-534364-2	14	1
35-534364-3	14	1
35-534364-4	14	1
35-534364-5	14 - 58A	1
35-534364-6	14 - 54A	1
35-534364-6	14	1
35-534364-7	14 - 58C	1
35-534364-8	14 - 58E	1
35-534364-9	14 - 58B	1
35-534367	12 - 17	4
35-534368-2	12 - 3	4
35-534368-4	12 - 4	4
35-534369	12	1
35-534369-1	12 -	1
35-534369-2	12	1
35-534369-29	12 - 7	2
35-534369-3	12 - 5	2
35-534369-47	12 - 15	2
35-534369-48	12 - 16	2
35-534369-601	12	1
35-534369-602	12	1
35-534370-1	12	1
35-534370-2	12 - 11	1
35-534371-1	13 - 10	1
35-534372	14	1
35-534372-1	14 - 59	1
35-534372-25	13C- 50	1
35-534372-25	14	1
35-534372-3	14	1
□35-534372-31	13C- 51	1
35-534372-31	14 - 61	1
35-534372-33	13C- 57	2
35-534372-33	14C	2
35-534372-33	14D	1
35-534372-35	14 - 60	1
□35-534372-37	13C- 61	1
35-534372-37	14	1
35-534372-39	14	1
□35-534372-41	13C- 54	2
35-534372-41	14 - 64	2
35-534372-43	14	1
35-534372-47	14	1
□35-534372-49	13C- 53	1
□35-534372-5	13C- 55	1
35-534372-5	14	1
35-534372-603	13C	1
□35-534372-65	13C- 59	1
□35-534372-65	14C- 65	1
35-534372-65	14D-118	1
35-534372-67	13C- 60	1
35-534372-67	14C- 66	1
35-534372-67	14D-117	1
35-534372-71	13C- 58	1
35-534372-71	14C- 64	1
35-534372-71	14D-116	1
35-534372-77	13C	1
35-534372-77	14D	1
35-534372-79	13C- 49	1
35-534372-81	13C- 52	1
35-534372-83	13C- 56	1
35-534372-83	14C- 63	1
35-534372-83	14D-115	1
□35-534372-85	13C- 62	1
□35-534372-85	14C- 68	1
35-534372-85	14D-120	1
35-534372-89	13C-	1
35-534372-89	14C- 62	1
35-534372-89	14D-114	1
□35-534372-91	14C- 67	1
35-534372-91	14D-119	1
35-534374	14 - 27	2
35-534377	13A	1
35-534377-25	13A- 1	1
35-534377-27	13A- 19	1
35-534377-28	13A	1
35-534377-33	13A- 24	1
35-534377-35	13A	1
35-534377-45	12A	1
35-534377-45	13A- 23	1
35-534377-61	13A- 27	2
35-534377-71	13A	2
35-534378	13A	2
35-534378-15	13A- 17	2
35-534378-17	13A- 16	2
35-534378-19	13A- 14	2
35-534378-21	13A- 5	2
35-534378-23	13A- 8	2
35-534378-25	13A- 15	2
35-534378-27	13A- 10	2
35-534378-3	13A- 6	2
35-534378-9	13A- 9	2
35-534381	14	1
35-534381-1	14 - 70	2
35-534381-1	14	1
35-534381-11	14	1
35-534381-13	14	1
35-534381-5	14 - 71	1
35-534381-9	14	1
35-534382	14 -	2
35-534382	14A- 5	1
35-534382	14A- 14	1
35-534382	14A- 37	1
35-534382	14A- 43	1
□35-534384	6	1
□35-534384	9 - 15	1
35-534387-5	14A- 42	1
35-534388-11	14A- 25	1
35-534388-13	14A- 46	1
35-534388-15	14A- 47	1
35-534388-21	14A- 3	1
35-534388-23	14A- 4	1
35-534388-25	14A- 60	1
35-534388-27	14A- 62	1
35-534388-29	14A- 2	1
35-534388-31	14A- 21	1
35-534388-7	14A- 35	1
35-534388-9	14A- 36	1
35-534390-55	13C- 28	2
□35-534394-27	14C- 75	1
□35-534394-31	14C- 76	1
□35-534394-33	14C- 77	1
□35-534394-39	14C- 78	1
35-534394-650	14C- 70	1
35-534394-652	14C- 71	1
35-534394-654	14C- 72	1
35-534394-656	14C- 73	1
35-534394-658	14C- 74	1
35-534399	14C	1
□35-534399-1	14C- 92	1
35-534402	14D- 2	1
35-534402	14D- 59	1
35-534406-71	14D- 95	2
35-534406-85	14D-101	4
35-534406-87	14B- 34	1
35-534406-87	14C- 37	1
35-534409-1	14C- 97	4
35-534409-5	14B-118	2
□35-534412	14C	2
35-534412	14C- 23	4
35-534412	14D- 69	4
35-534417	14D- 45	1
35-534420-113	14C- 41	1
35-534420-29	14C- 24	1
35-534420-35	14C- 34	1
35-534420-43	14C- 31	1
35-534420-49	14C- 4A	1
35-534420-49	14D- 71	1
35-534420-57	14C	1
35-534420-67	14C- 44	1
35-534420-83	14D- 32	1
35-534420-85	14D- 33	1
35-534437-175	14D- 5	1
35-534437-177	14D- 6	1
35-534437-183	14D- 4	1
35-534437-187	14D- 8	1
35-534437-197	14D- 65	1
35-550042	48 - 85	1
□35-550042	48A- 92	1
□35-550055	47C	1
□35-550057	47C- 44	1
35-550058-2	47C- 49	1
35-550058-6	47C- 48	1
35-550059	47C- 41	1
35-550060	47C- 43	1
□35-550061	47C- 42	1
35-550062	47C- 46	1
35-550062-2	47C	1
□35-550063	47C- 47	1
35-550075	47C	1
35-550501-20	48A- 76	1
35-550520	10 - 82	2
□35-550520	47D- 61	1
□35-550520	48A- 80	1
35-550520	54 - 5	2
□35-550561-11	47C- 54	1
35-550561-13	47C- 29	1
35-550561-15	47C- 31	1
35-550561-29	47C- 53	4
35-550561-33	47C- 39	1
□35-550561-35	47C- 36	1
35-550561-37	47C- 35	2
35-550561-39	47C	1
35-550561-43	47C- 56	2
35-550561-45	47C	1
35-550561-47	47C- 30	1
35-550561-49	47C- 55	1
35-550561-5	47C- 38	1
35-550561-55	47D- 8	2
35-550561-607	47C	1
35-550561-611	47C	1
35-550561-9	47C- 26	1
□35-550562-21	47C- 2	1
35-550562-33	47C-	1
35-550562-35	47C	1
35-550562-37	47C	1
35-550562-39	47C- 14	1
35-550562-41	47C- 21	1
35-550562-43	47C- 15	1
□35-550562-51	47C- 9	1
35-550562-55	47C	1
35-550562-57	47C	1
35-550562-59	47C- 22	1
□35-550562-607	47C	1
□35-550562-61	47C- 18	1
35-550562-63	47C	1
35-550562-65	47C	1
35-550562-67	47C- 16	2
□35-550562-85	47C- 4	1
□35-550562-87	47C- 12	1
□35-550562-87	47C- 20	1
□35-550562-91	47C- 10	1
□35-550562-97	47C- 1	1
35-560001-15	64A	1
35-560001-19	64A- 42	1
35-560001-21	64A- 47	1
35-560001-23	64A- 68	1
35-560001-25	64A- 65	1
35-560001-27	64A- 61	1
35-560001-29	64A- 70	1
35-560001-35	64A- 43	1
35-560001-37	64A- 45	1
35-560001-39	64A- 54	1
35-560001-47	64A- 63	1
35-560001-49	64A- 49	1
35-560001-51	64A- 66	1
35-560001-57	64A- 40	1
35-560001-61	64A	1
35-560001-7	64A	1
35-574021	7	1
□35-590006	7 - 1	1
□35-590058	7 - 4	2
□35-590070-23	9	1
35-590070-27	7	1
35-590070-29	7	1
35-590070-3	10 - 20	1
35-590070-35	9	1
35-590070-39	61C- 85	1
35-590070-41	7	1
35-590070-55	8	1
35-590070-55	8A- 15	1
35-600003	27 - 6	2
35-600003	27 - 11	2
35-600003	28 - 38	2
35-650121	27	2
35-650121-2	27 - 4	4
35-650121-4	27	2
35-650121-6	27 - 7	2
35-650122-4	27 - 12	2
□35-663-1A/M/	60	1
35-8002-11	37H- 15	2
□35-8002-13	37H- 5	2
□35-8002-15	37H- 6	4
□35-8002-17	37H- 7	2
□35-8002-19	37H- 8	2
35-8002-3	37C	2
□35-8002-5	37	1
□35-8002-5	37H	2
35-8002-7	37C- 12	2
35-8002-9	37C- 7	2
35-810026-21	37	1
35-810026-22	37	1
35-810026-603	37	1
35-810026-604	37	1
35-810026-7	37	2
35-810072	36 - 55	2
35-810072	36A- 53	2
35-810075-1	39 - 42	1
35-810076	39 - 25	1
35-810077	39 - 27	2
35-810083	39 - 21	1
35-810087	39 - 18	1
35-810088	39 - 20	1
35-810091	39 - 31	1
35-810094	39	1
35-810094-2	39 - 3	1
35-810094-6	39 - 4	1
35-810095	39 - 6	1
35-810097	39 - 1	4
35-810117	39 - 24	1
35-810119	39 - 17	1
35-810122	38 - 23	2
35-810122	42 - 33	1
35-810132	23	2
35-810132	39	1
35-810132-2	23 - 14	2
35-810132-2	39 - 44	1
35-810133	23 - 15	2
35-810133	39 - 45	1
35-810134	39 - 9	2
35-810135	39 - 34	1
35-810136	39 - 30	1
35-810141	39 - 13	1
35-810141-3	39	1
35-810142	39 - 7	1
35-810143	39	1
35-810147	39 - 25A	1
35-810160	36A- 45	1
35-810161	36A	1
35-810165	37	1
35-810166	37 - 28	1
35-810167	39	1
□35-810170	37	1
□35-810171	37	1
35-815004	36	1
35-815004	36A- 50	1
□35-815004	37 - 58	1
35-815004-1	36 - 52	1
35-815004-1	36A	1
□35-815004-1	37	1
35-815006-12	46 - 1	1
35-815006-13	46 - 2	1
35-815006-24	46 - 20	2
35-815006-24	46 - 67	2
35-815006-8	46 - 31	1
35-815007-4	38 - 27	2
□35-815016	40 -	2
□35-815016-1	40	2
□35-815016-2	40 - 9	2
□35-815016-3	40	2
35-815020	39 - 14	1
35-815022	36A- 18	2
35-815023	36 - 54	2
35-815023	36A- 52	2
35-815023	36A	4
□35-815023	37 - 63	4
□35-815023-1	37	2
35-815037	46 - 19	1
35-815037	46 - 53	1
35-815038	36 - 65	2
35-815038	36A- 63	2
35-815043	36	1
35-815043	36A- 48	1
35-815044	36 - 50	1
35-815044	36A	1
35-815048	46 - 4	1
35-815055	40 -	1
35-815055-1	40	1
□35-815055-10	40 - 15	1
35-815055-11	40	1
□35-815055-12	40 - 16	1
□35-815055-13	40	1
□35-815055-56	40 - 5	1
□35-815055-57	40	1
□35-815055-601	40	1
□35-815055-602	40	1
35-815055-62	40 - 18	2
35-815055-63	40	2
35-815055-64	40 - 14	1
□35-815055-65	40	1
□35-815055-68	40	2
□35-815055-69	40	2
□35-815056	40	4
□35-815056-2	40 - 21	4
□35-815056-4	40 - 23	4
35-815066	36 - 19	2
35-815069	46 - 25	1
35-815077	38	1
35-815077-1	38	1
35-815077-10	38 - 45	1

PART NUMBER	FIGURE & INDEX NO.	QTY. PER ART.
35-815077-11	38	1
35-815077-2	38 - 45	1
35-815077-3	38	1
35-815077-4	38 - 46	1
35-815077-5	38	1
35-815077-8	38	1
35-815077-9	3B	1
35-815078	38 - 34	2
35-815081	36 - 36	2
35-815081	36A- 16	2
◻35-815081	37 - 9	2
35-815088-10	36	2
35-815088-16	36A- 26	2
35-815088-18	36A	2
35-815088-4	36 - 26	2
35-815088-4	36A- 25	2
35-815088-6	36 - 27	2
35-815095	46 - 26	1
35-815101-2	38 - 26	2
35-815102-20	38	1
35-815102-21	38	1
35-815109	38	2
35-815109	38 - 42	2
35-815115	38 - 48	2
35-815120	38 - 19	2
35-815123-10	38 - 18	2
35-815124	38 - 17	2
35-815125-12	38	1
35-815125-14	38	1
35-815125-2	38	1
35-815125-4	38	1
35-815125-602	38 - 7	1
35-815125-604	38	1
35-815129	38	2
35-815131	38 - 8	2
35-815146-2	58 -145	1
35-815147	58 -141	1
◻35-815147	58A- 97	1
35-815148-9	58 -140A	1
35-815155 SA2	38	1
35-815155 SA3	38	1
35-815155-2	38	1
35-815155-3	38	1
35-815155-610	38 - 20	1
35-815155-611	38	1
35-815155-611	38	1
35-815155-611	38	1
35-815155-611	38	2
35-815156	38 - 50	1
35-815156-1	38	1
35-815180	46	1
35-815180-2	46 - 38	1
35-815180-6	46 - 39	1
35-815182	36 - 4	4
35-815182	36A- 4	4
35-815184-9	58A-103	1
35-815192-1	36A	1
35-815192-13	36A- 7	2
35-815192-15	36A- 20	2
35-815192-17	36A- 13	2
35-815192-19	36A- 14	2
35-815192-2	36A	1
35-815192-21	36A- 15	2
35-815192-23	36A- 6	2
35-815192-25	36A	1
35-815192-26	36A	1
35-815192-27	36A	2
35-815192-29	36A- 19	2
35-815192-3	36A	1
◻35-815192-33	37 - 7	1
◻35-815192-34	37	1
35-815192-37	36A	2
35-815192-39	36A	1
35-815192-4	36A	1
35-815192-40	36A	1
35-815192-41	36A	2
35-815192-5	36A	1
35-815192-6	36A	1
35-815192-7	36A	2
35-815192-9	36A	2
35-815194	36A	2
35-815194-1	36A- 42	2
◻35-815194-1	37 - 37	2
35-815194-3	37	2
35-815196-19	36A	1
35-815196-20	36A	1
35-815196-23	36A	1
35-815196-24	36A	1
35-815196-25	37	2
35-815196-3	36A	1
35-815196-4	36A	1
35-815196-603	36A	1
35-815196-604	36A	1
35-815196-612	36A-	1
35-815196-613	36A	1
35-815196-616	36A	1
35-815196-617	36A	1
35-815196-691	36A	1
35-815196-692	36A	1
35-815197-1	36A- 17	1
35-815197-2	36A	1
35-815246-1	37 - 12	1
◻35-815246-11	37 - 15	2
35-815246-3	37	1
◻35-815246-5	37	1
◻35-815246-7	37	1
◻35-815246-9	37 - 13	2
◻35-815247-15	37 - 26	4
◻35-815247-9	37 - 50	2
◻35-815249-1	37 - 52	2
◻35-815250	37 - 2A	4
35-815251-1	37 -	2
◻35-815251-3	37 - 22	2
35-815252-1	37 - 23	2
35-815252-3	37 - 24	2
◻35-815253	37 - 31	2
◻35-815254-7	37	2
◻35-815254-9	37	2
35-815256	37 - 19	4
35-815260-1	37	1

PART NUMBER	FIGURE & INDEX NO.	QTY. PER ART.
◻35-815260-2	37	1
35-815266-1	40	2
35-815266-2	40	2
35-82002B	41 - 48	1
◻35-820028	41A- 24	1
◻35-820045	44 - 46	1
35-820094	42	1
35-820094-2	42 - 12	1
35-820094-4	42 - 13	1
35-820095	42 - 14	1
35-820107	41 -	2
◻35-820107	41A	1
35-820107-1	41 - 43	2
35-820107-1	41A- 14	1
35-820108	41 - 40	2
◻35-820108	41A- 12	1
35-820114-2	41 - 24A	1
35-820115	41 - 5	2
◻35-820115	41A- 49	2
35-820122	41 - 29	1
35-820123	41 - 44	4
◻35-820123	41A- 15	2
35-820125	41 - 33	1
◻35-820125	41A	1
35-820130-2	41 - 24	1
◻35-820130-2	41A- 52	1
35-820130-4	41 - 27	2
35-820131-7	41 - 17	1
35-820132	41 - 41	2
◻35-820132	41A- 19	1
35-820133	41 - 18	1
◻35-820133	41A- 62	1
35-820134	41 - 32	1
◻35-820134	41A- 39	1
35-820135	41 - 6	2
◻35-820135	41A- 45	2
◻35-825005	44 - 41	1
◻35-825006	44	1
◻35-825006-2	44 - 30	1
◻35-825007	44	1
◻35-825007-2	44 - 33	1
◻35-825035	44	1
◻35-825035-2	44 - 36	1
◻35-825044-4	44	1
35-825044-6	44 - 45	1
◻35-825045	44 - 43	1
◻35-825046	44 - 1	1
◻35-825046	44 - 39	1
◻35-825049	44 - 6	1
◻35-825051	44 - 10	1
◻35-825052	44	1
◻35-825052-2	44 - 7	1
◻35-825053	44 - 28	2
35-825054	35 - 39	1
35-825074	42 - 39	1
35-825076-1	42 - 17	1
35-825094-4	42 - 19	1
35-825097	44 - 47	1
35-825108	42 - 27	1
35-825111	42 - 44	1
35-825118	42 - 38	1
35-825119-1	42 - 36	2
35-825123	42 - 28	2
35-825129	41 - 61	1
35-825145	41 - 51	1
◻35-825145	41A- 27	1
35-825145	43 -	1
35-825146	43 - 1	1
35-825147	43 - 5	1
35-825148	43 - 2	1
35-825151	43 - 7	2
35-825152	43 - 3	2
35-825160	44 -	1
35-825160-601	44	1
◻35-825161	44	1
◻35-825162	44	1
◻35-825162-2	44 - 23	1
◻35-825163	44 - 17	1
◻35-825164	44 - 19	1
◻35-825165	44 - 16	1
◻35-825170	44 - 3	1
◻35-825171-1	44 - 2	1
35-825172-2	39 - 38	1
◻35-825173	44	1
◻35-825173-2	44 - 25	1
35-825175-12	41 - 56	1
◻35-825175-12	41A- 8	1
35-825175-6	41 - 56	1
35-825175-6	41A- 52	1
35-825185-12	42 - 2	1
◻35-825185-14	42 -	1
35-825188	42 - 20	1
35-825191-1	42	1
35-825191-3	42	1
35-825191-5	42 - 41	1
35-825191-7	42	1
◻35-825193-1	41A- 18	1
◻35-825195-21	41A	1
◻35-825195-31	41A	1
35-825195-33	41A	1
◻35-825195-35	41A- 4	1
35-825195-37	41A	1
◻35-825195-51	41A- 58	1
◻35-825195-601	41A	1
◻35-825195-603	41A- 61	1
◻35-825196-23	41A	1
◻35-825196-25	41A- 65	1
35-825196-601	41A	1
35-825196-614	41A	1
35-825196-618	41A	1
◻35-825196-691	41A	1
35-825196-696	41A	1
◻35-910003-43	49 - 5	4
◻35-910003-43	49C- 78	8
◻35-910004-7	49	2
35-910057	52	1
35-910057	52A	1
35-910057-1	52	1
35-910057-1	52A	1
35-910288	53	2

PART NUMBER	FIGURE & INDEX NO.	QTY. PER ART.
35-919133	53A- 7	2
35-919138-1	53A- 5	2
35-919139	53A- 11	2
35-919146-4	53A- 8	2
35-919148-12	53A- 4	2
35-919148-18	53A- 3	2
35-919148-20	53A	2
35-919149-10	53A	2
35-919149-12	53A	2
35-919149-14	53A	2
35-919149-4	53A- 6	2
35-921154-100	57D	1
35-921154-101	57D- 56	2
35-921154-99	57D- 60	1
◻35-921241-1	6 - 14	4
◻35-921241-3	6	4
◻35-921242-5	57D	1
◻35-921242-6	57D	1
35-921502	57 - 29	4
◻35-921502	57D- 94	6
35-921503	57 - 5	4
35-921503	57 - 50	2
35-921503	57A- 39	2
35-921503	57A- 43	4
35-921503	66 - 12	1
35-921532	57	2
35-921533	57	2
35-924094	57	1
35-924095	57 - 60	1
◻35-924148 B-C	6 - 17	4
◻35-924148 W-C	6	4
◻35-939178-1	49	1
◻35-939178-7	49 - 52	1
◻35-939180-1	49 - 22	2
35-944037	52A- 14	4
◻35-950126	49 - 3	2
◻35-950126	49C- 77	4
350106	69 - 24	2
3515-14-05	53	8
3517-2	48B- 35	1
35175A	39	2
3519-12	57E- 3	2
35316	14 - 2J	1
3536-18	47 - 12	4
◻356	58A	1
357004	63 - 63A	1
36-530023-17	13D- 48	2
36-530023-17	13E- 32	2
36-530025-13	13D- 21	4
36-530025-14	13D- 22	4
36-530025-15	13D- 9	2
36-530025-15	13E- 9	2
36-530025-27	13D- 19	2
360A1A	49 -	2
362842	49D	6
365533	49D	1
◻366-00	57D- 58	2
◻366-00	57D- 78	2
367-00	57	2
367-00	57A- 14	2
367386	49D	1
367418	49D	1
367421	49D	1
367545	49D	1
367546	49D	1
367547	49D	1
367631	49D	1
367639	49D	1
367653	49D	1
367694	49D	1
367695	49D	1
367725	49D	2
367757	49D	1
367949	49D	1
367962	49D	1
367970	49D	1
◻3686	44 - 22	1
37059	57E- 5	2
37117	57E- 7	2
◻372T8349	68 - 59	1
3732065	15 - 13	2
37572	49K	4
37615-110	57E- 8	2
37615-339	57E- 6	2
37685-2	57E- 9	2
37690	57E- 12	2
37691	57E- 10	2
37693	57E- 11	2
37810-1	57E	2
37825	57E- 1	2
37826	57E	2
379-S-138	49D	3
379-S-21	49D	1
37904	57E- 4	2
38E63-1A	70 - 14	1
38004	69 - 21	2
38038	57E- 12	2
383493	49D	1
384583	49D	4
39A4240	66	2
399847	49D	1
4	18	22
4	18	26
4X10-1/4X33	7	1
◻40-98	37I	2
40A50	48 - 12	2
◻40A50	48A- 12	2
400433	49E- 24	2
40209-17	54	1
40209-5	54 - 1	1
40209-5	54 - 2A	1
40209-6	54	1
40209-6	54	1
40209-7	54 - 2	2
40209-7	54	1
4036-A	57A- 8	2
404-180074	46 - 40	1
408-0293-233	25 - 8	1
408-0293-233	25A- 19	1
4131049	15 - 14	2

PART NUMBER	FIGURE & INDEX NO.	QTY. PER ART.
¤414-180657-3	13D- 64	16
¤414-180657-3	13E- 43	16
414-181500-53	18 - 59	2
414-183389-1	12A	1
414-183389-1	13A	2
414-183389-3	12A	1
414-183389-3	13A	2
414-183389-5	12A	1
414-183389-5	13A	2
¤414-183761-5	61C- 26	2
¤414-183802-3	61C- 27	2
414-183950-123	48 - 26	1
¤414-183950-123	48A- 26	1
414-183950-125	48 - 25	1
¤414-183950-125	48A- 25	1
414-183950-135	48 - 27	1
¤414-183950-135	48A- 27	1
414-183955-111	48A- 77A	1
414-183963-9	48 - 6	1
¤414-183963-9	48A- 6	1
¤414-183963-9	48A-119	2
414-183976-15	48 - 56	1
¤414-183976-15	48A- 57	1
¤414-184040-1	8	2
¤414-184040-1	17 - 18	3
¤414-184040-1	17A- 16	3
¤414-184040-1	51	6
¤414-184040-11	17A- 23	3
414-184040-13	8	2
414-184040-13	51	6
¤414-184040-15	8 - 27	2
414-184040-17	8 - 30	2
¤414-184040-17	17A	1
¤414-184040-19	8	2
¤414-184040-19	17 - 17	3
¤414-184040-19	17A- 15	1
¤414-184040-21	8 - 29	2
¤414-184040-21	17A	1
¤414-184040-3	8 - 26	2
¤414-184040-3	51 - 12	6
414-184040-5	51 - 13	6
¤414-184040-7	17 - 16	3
¤414-184040-7	17A- 14	3
¤414-184040-9	8 - 28	2
¤414-184040-9	17A- 24	3
¤414-189412	63 - 68	2
414-920022-1	57D- 70	2
4140-00	57D- 26	2
4140-00-5	57A	2
4142341G49	63 -121	2
416-50	57	2
416-52	57 - 21	2
416-53	57 - 24	2
416-54	57 - 12	2
416-55	57 - 19	6
416-56	57 - 15	2
416-59	57 - 18	6
416-60	57 - 16	6
416-61-6	57 - 11	2
416-85	57 - 9	2
416-85-25	57 - 10	2
416-85-31	57 - 9	2
417H2	48B- 25	2
4190	49	2
42NKE054	69 - 22	2
423CC	70 - 10	2
427-8	57 - 23	2
43C2-15K	66	1
437-7	48B	1
447A39	48B- 44	1
449-0003	25	2
449-0006	25	1
¤45-115018	41A	1
¤45-115018	63 - 53	2
45-115019	18 - 26	1
45-115019-1	18	1
45-115136	18	1
45-115136-1	18	1
45-115136-2	18 - 25	1
45-115136-3	18	1
45-115136-4	18 - 22	2
45-115136-6	18 - 23	2
45-115136-8	18 - 24	2
45-135030-3	20	1
45-135030-7	20 - 8	1
45-135031-1	2	1
45-135031-43	20 - 9	1
45-135031-47	20 -	1
45-135031-55	21A- 16	2
45-135031-57	21A- 15	2
45-135031-75	2	1
45-135032	20 - 7	1
45-135032-3	3	1
45-135032-75	3	2
45-135033	20	1
45-135033-3	20 - 14	1
45-135034	31	1
45-135034-1	31 - 68	1
45-135035	20 - 2	1
45-135036	20 - 4	1
45-135037	27 - 43	2
45-135037	31 - 69	1
45-135038	20 - 15	1
45-135038	27 - 44	2
45-135038	28 - 31	2
45-135038	31 - 70	1
45-135039-1	20 - 11	1
45-361115	63	1
¤45-361116	63 - 47	1
¤45-361117	63	1
45-361119-7	22A- 14	1
45-361219-3	36 - 67	1
45-361219-3	36A- 69	1
45-361235	41	1
45-361235-9	41 - 54	1
45-364193	23 - 16	1
45-364193	25 -	1
45-364193-1	25 - 2	1
45-364193-3	25 - 3	1
45-364193-5	25 - 21	1
45-364238	36 - 72	2
45-364238	36A- 74	2
¤45-364238	37 - 76	2
45-410021-10	8	1
45-410021-11	8	1
45-410021-4	8 - 68	1
45-410021-5	8	1
45-410021-6	8 - 65	1
45-410021-7	8	1
45-410087	34 - 29	2
45-410204-5	3 - 24	1
45-410204-5	4	1
¤45-440000-602	8 - 76	1
¤45-440000-602	17 - 1	1
45-440000-606	8	1
45-440000-606	17	1
45-521011	31 - 65	1
45-521100-3	31 - 63	1
45-521212	24	1
45-521212-1	24	1
45-521212-14	23 - 1	1
45-521212-15	23 - 2	1
¤45-521212-2	24 - 10	2
45-521212-4	24	1
¤45-521212-5	24	1
¤45-521212-604	24 -	1
¤45-521212-605	24	1
¤45-521214	24 - 11	1
¤45-521214-1	24	1
¤45-521216	24 - 9	1
¤45-521216-1	24	1
45-524040	34	1
45-524040-2	34 - 2	1
45-524040-602	34 -	1
45-524538	58 - 68	1
45-524538	58A	1
45-524539	58 - 66	1
45-524539	58A- 73	1
45-524557-1	27 - 30	1
45-524557-1	31 - 56	1
45-524557-3	27	1
45-524560	31	1
45-524561-1	31 - 62	1
45-524561-3	27 - 39	2
45-524561-3	28 - 27	1
45-524562	27 - 38	2
45-524562	31 - 57	1
45-524563	27 - 32	2
45-524563	28 - 21	1
45-524563	31 - 55	1
45-524564	27 - 35	2
45-524564	28 - 23	1
45-524564	31 - 61	1
45-524565-3	27	1
45-524565-5	27	1
45-524566-1	31 - 54	1
45-524566-3	27 - 31	1
45-524566-5	27	1
45-524569	27 - 34	2
45-524569	28 - 22	1
45-524569	31 - 60	1
45-524572	32 - 15	2
45-524615-9	31	1
45-524624	31 - 79	4
45-524626	27	2
45-526005-1	27	1
45-526005-2	27	1
45-526005-3	27 - 20	2
45-526006-3	27 - 23	2
45-526006-5	27 -	2
45-526006-7	27 - 22	2
45-526007-1	27 - 25	2
45-526008	27 - 40	2
45-526009	27	2
45-526009-1	27 - 42	2
45-526011	27	2
45-526011	32 - 23	2
¤45-526011-1	27	2
45-526011-11	27 - 16	2
45-526011-13	27 - 15	2
45-526011-3	27	2
45-526011-3	33 - 23	2
45-526011-9	27	2
45-526011-9	32	2
45-526015	27 - 27	2
45-526015	28 - 16	1
¤45-590059	7 - 5	1
45-600011	26 - 9	AR
45-610005-110	29 - 13	1
45-610005-111	29	1
45-610005-2	29 -	1
45-610005-3	29	1
45-610005-4	3 - 66	1
45-610005-4	4 - 66	1
45-610005-4	4A- 67	1
45-610005-4	4	1
¤45-610005-40	29 - 15	2
45-610005-42	3 - 70	1
45-610005-42	4 - 69	1
45-610005-42	4A- 70	1
45-610005-42	4	1
45-610005-43	3 - 69	1
45-610005-43	4 - 70	1
45-610005-43	4A- 69	1
45-610005-43	4	1
¤45-610005-5	3 - 67	1
45-610005-5	4 - 67	1
¤45-610005-5	4A- 68	1
45-610005-5	4	1
45-620011-12	27 - 3	16
45-620011-2	28 - 2	4
45-620011-4	27 - 2	12
45-620011-4	28 - 3	8
45-620020	27 - 46	2
45-620020	28 - 33	1
45-620021	27 - 45	2
45-620021	28 - 32	1
45-630005-102	30 - 3	1
¤45-630005-112	3 - 16	1
45-630005-112	4 - 17	1
¤45-630005-112	4A- 17	1
45-630005-112	4	1
¤45-630005-113	3 - 43	1
45-630005-113	4 - 47	1
¤45-630005-113	4A- 46	1
45-630005-113	4	1
45-630005-122	30 - 4	1
45-630005-142	30 - 15	1
45-630005-150	30 -	1
45-630005-152	30 - 10	1
45-630005-52	30 - 13	1
45-630012-2	30 - 11	1
45-630012-4	30 - 12	1
¤45-630012-6	29 - 10	2
¤45-630012-8	29 - 11	2
45-640005-39	28 - 7	2
45-640005-45	28	1
45-640005-47	28	1
45-640005-49	3 - 42	1
45-640005-49	4	1
45-640005-51	3 - 15	1
45-640005-51	4	1
45-640010	28 - 35	1
45-640011	28 - 36	1
45-650005-41	28 - 4	1
45-660011	29 - 12	2
¤45-660012-1	3 - 68	2
45-660012-1	4 - 68	1
¤45-660012-1	4A- 72	2
¤45-660012-1	29 - 5	2
45-660012-1	4	2
45-660013	29	2
45-660013-2	29 - 9	2
¤45-660041	29 - 14	2
45-810090	39 - 40	1
45-810144	39 - 27A	1
45-815003-1	38	1
¤45-815003-3	38 - 24	1
¤45-815005-1	40 - 6	2
¤45-815005-2	40	2
¤45-815011-10	37	2
45-815011-4	36 - 41	2
45-815011-4	36A- 37	2
45-815011-6	36	2
45-815011-6	36A	2
¤45-815011-8	37 - 32	2
45-815013	36 - 43	4
45-815013	36A- 38	4
45-815013	36A- 43	4
¤45-815013	37 - 33	4
¤45-815013	37 - 38	4
45-815014	36 - 40A	2
45-815015-4	36 - 42	2
45-815015-6	36	2
45-815091	38 - 11	2
45-815116	38 - 31	2
45-815201-2	36 - 49	2
45-815201-2	36A- 47	2
45-815213-2	36 - 7	2
45-815215	36	2
45-815215	36A	2
45-815215-2	36 - 9	2
45-815215-2	36A- 8	2
45-815215-4	36 - 10	2
45-815215-4	36A- 9	2
45-815220	36 - 16	2
45-815222-2	36 - 17	2
45-815222-4	36	2
45-815223-4	36 - 18	2
45-815224	36 - 22	2
45-815225	36 - 25	2
45-815230	36 - 11	2
45-815230	36A- 10	2
45-815231	36 - 12	2
45-815231	36A- 11	2
45-815232	36 - 35	2
45-815232	36A- 32	2
45-815237	36 - 38	2
45-815237	36A- 33	2
45-815237	36A- 40	2
¤45-815237	37 - 29	2
¤45-815237	37 - 35	2
45-824009-3	42 - 35	1
45-824011	42 - 37	1
45-824012	41 - 36	1
45-824014	42 - 21	1
45-825001-3	41 - 65	1
45-825011	41 - 2	2
¤45-825011	41A- 3	2
45-825031	41 - 12	1
¤45-825031	41A- 60	1
45-825032	41 - 21	1
¤45-825032	41A- 64	1
45-825033	41 - 30	1
¤45-825033	41A- 34	1
45-825034	41 - 31	2
¤45-825034	41A- 35	2
45-825078-1	42 - 45	2
45-825080	42 - 31	1
45-825080-11	42	1
45-825084	42 - 30	1
¤45-910162-3	51	8
¤45-910163-3	51	8
¤45-910186-3	51	8
45-921541	57 - 41	2
45-921541	57A- 32	4
45-921541	57D- 3	2
45-921544	57 - 26	2
¤45-939120	49 - 45	2
¤45-939120	49C- 34	2
¤45-939120	49C- 44	2
45A28	48C- 13	9
45C40	48C- 1	1
450273	39 - 23	2
4523	63 - 52	2
4524	63 - 62	1
455-28	10	1
¤4553	63 - 52	2
455613	49J	4
456-0010-006	25 - 18	2

PART NUMBER	FIGURE & INDEX NO.	QTY. PER ART.
¤4570	41A	1
¤4570	63 -113	1
¤4596	17 - 12	1
46014476	14B- 62	1
4601746	14C- 69	1
461	48B- 31	1
462A	48B- 36	1
¤4626	17A- 20	1
¤4626	41A- 72	1
47	8	1
475126	48D- D	2
475594	48D- J	2
475634	48D- G	2
¤476284	48A	2
476285	48D- C	2
476364	48D- E	2
476411	57 -104	2
476439	48 - 61	1
476439	48	2
476439	48A- 62	2
476439	48D-	2
476439	65 - 15	1
476439	66 - 23	1
476474	48D- B	2
476563	48D- H	2
477987	48D	2
¤48152	61C- 38	3
48154	58A- 96	4
4840719	14D- 73	1
490028	48D- F	6
¤49158	63 -117	2
¤49196	63 - 6	20
¤49245	63 - 5	20
49341	48B- 39	AR
¤49338	44 - 4	6
49384	18 - 30	4
49384	21 - 8	1
49384	21A	4
49384	22 - 10	4
49384	22A	4
5	15	2
5	15	2
¤5 ROLLER	61C- 7	1
5.00X5	41 - 63	1
5.00X5	41 - 64	1
5.00X5	41	1
¤5.00X5	41A- 7	1
¤5.00X5	41A	1
¤5.00X5	41A	1
501048	67 - 58	1
¤50 OHM 25 WATT	63 - 61H	1
50-105011	18 - 9E	2
50-110002-178	18 - 43	2
50-110010-104	18 - 13	1
50-110010-105	18	1
50-110010-106	18 - 20	2
50-110010-18	19 - 62	1
50-110010-19	19	1
50-110010-20	19 - 63	1
50-110010-21	19	1
50-110010-28	19 - 64	1
50-110010-29	19	1
50-110010-30	19 - 65	1
50-110010-31	19	1
50-110010-50	19A- 65	1
50-110010-51	19A	1
50-110010-52	19A- 66	1
50-110010-53	19A	1
50-110010-54	19A- 66A	1
50-110010-55	19A	1
50-110025-44	18 - 39	1
50-110074-5	18 - 36	1
50-110074-6	18	1
50-115034	19 - 53	1
50-115034-1	19	1
50-160012-1	22A- 8	1
50-160012-2	22A	1
50-160013-1	22A- 9	1
50-160013-2	22A	1
50-295158-26	58 - 18C	1
¤50-300013-37	37F- 11	2
50-320024	58 - 21	1
¤50-320024	58A- 4	1
50-320029	58 - 37	1
50-320030	58A- 82	1
50-320030-2	58	1
50-320031-2	58	1
50-320031-2	58A- 81	1
50-320032	58 - 88	1
50-320032	58 -100	1
50-320032	58 -114	1
50-320032	58A-114	1
50-320033	58A-116	1
50-320034	58 -115	1
50-320034	58A- 65	1
50-320038	58 -107	1
50-320046	58 -116	1
50-320046	58A	1
50-320091	58 - 23	1
¤50-320091	58A- 5	1
50-320092	58 - 18B	1
50-320092	58A	1
50-320092-2	58A- 16	1
50-320092-4	58A- 18	1
50-320093-10	58	1
¤50-320093-10	58A- 20	1
50-320093-6	58	1
¤50-320093-6	58A- 19	1
50-320137	58 - 5	1
50-320137	58 - 38	1
50-320148	58	1
50-320148	58A- 23A	REF
50-320148	61C- 40	1
50-320148-2	58 - 33	1
50-320242	58 -112	1
50-320242	58A- 83	1
50-320243-17	58	1
50-320243-604	58 - 8	1
50-324026-602	58	1
50-324076-13	15 - 15	2

PART NUMBER	FIGURE & INDEX NO.	QTY. PER ART.
¤50-324103-1	61C- 33	1
¤50-324103-1	61C- 47	3
50-324104	61C- 12	1
50-364108	58 -155	2
50-364108	58A- 29	2
50-364108	71 - 4	2
50-364129	58 -156	2
¤50-364129	58A- 26	2
¤50-364172-5	63 -110	2
¤50-364172-9	63 -111	1
¤50-364212-2	63 -112	1
¤50-364253-7	17 - 13	1
¤50-364253-7	17A- 19	1
¤50-364253-9	17 - 14	1
¤50-364253-9	17A- 21	1
50-364344-3	60 - 34	1
50-364344-7	60 - 30	1
50-364344-7	64A	1
50-364344-9	60	1
50-369050	66 - 11	1
50-380006-1	61 - 29	1
¤50-380011-19	61B- 10	1
¤50-380011-19	61C- 17	1
50-380013-5	14A-107	1
¤50-380013-5	61C- 29	1
50-380016-13	68 - 19	1
50-380016-13	69 - 76	1
¤50-380024	61B- 22	1
¤50-380024	61C- 34	1
¤50-380027	61B- 4	1
¤50-380027	67 - 86	1
¤50-380048-1	68 - 50	1
50-380048-1	69 - 73	1
¤50-380090	68 - 27	2
50-380090	69 - 42	2
¤50-380094-9	61B- 17	1
¤50-380094-9	61C- 32	1
¤50-384001-31	61B- 7	1
50-384001-31	66 - 49	1
50-384015	61 - 36	1
¤50-384024-17	61C- 30	1
¤50-384040	62 - 1	1
¤50-384040	62A- 1B	1
¤50-384042-1	61B- 1	1
¤50-384046	64 - 16	1
¤50-384052	61C- 9	1
50-384073	61C	1
¤50-384090	60 - 8	1
50-389002	57 - 70	2
50-389002-1	57	1
50-389002-3	57	1
50-389012-9	54	1
50-389083	69 - 17	2
50-389096-3	48A- 53	1
¤50-400165	17 - 5	1
¤50-400166	17 - 7	1
¤50-400166-6	17	1
¤50-400205	17 - 8	1
¤50-400205-1	17	1
50-400335-1	10	1
50-400336-1	10	1
50-400356	10	1
50-400356-1	10 - 27	1
50-400356-13	10 - 36	1
50-400356-15	10 - 38	1
50-400356-19	10	1
50-400356-3	10 - 26	1
50-400356-7	10 - 30	1
50-400357-3	10 - 41	1
50-400357-5	10 - 39	1
50-400365-5	10 - 33	1
50-524010-2	59	1
50-524038	58 - 59	1
50-524038	58A- 78	1
50-524039-267	58 - 41	1
50-524040	58 - 51	1
50-524041	58 - 53	1
50-524042-2	58 - 57	1
50-524042-2	58A- 67	1
50-524042-8	58 - 56	1
50-524042-8	58A- 66	1
50-524043-10	58 - 62	1
50-524043-10	58A- 70	1
50-524045-2	58 - 90	1
50-524045-2	58A-104	1
50-524045-8	58 - 92	1
50-524045-8	58A-106	1
50-524047	58 - 47	1
50-524047	58 - 69	1
50-524047	58 - 82	1
50-524047	58A- 75	1
50-524097	58 - 48	1
50-524123-2	58 - 50	1
50-524124	58 - 35	1
50-524138	58 - 64	1
50-524138	58 - 85	1
50-524138	58A- 72	1
¤50-524138	58A-112	1
50-524196	58 - 98	1
50-524197	58 - 75	1
50-524198	58A-115	1
50-524200-4	58 - 79	1
50-524200-4	58A-110	1
¤50-524201	58 - 87	1
50-524210	58 -110	1
50-524210-1	58	1
50-524223-1	58 - 74	1
50-524223-3	58 -128	1
50-524223-3	58A- 91	1
50-524305	58 -104	2
¤50-524315	60 - 20	1
¤50-524348	60 - 10	1
¤50-524594	60 - 7	2
50-534033-179	14D	1
50-534041-29	13C- 36	4
50-534041-9	13C- 37	4
50-534070	13 - 14	2
¤50-534073-1	13C- 64	1
50-534073-1	14 - 65	1
50-534269	13 - 22	2

PART NUMBER	FIGURE & INDEX NO.	QTY. PER ART.
50-534269-13	12 - 29	2
50-534269-23	12	4
50-534269-23	13	4
50-534269-615	13	1
¤50-534288	64A- 36	1
¤50-534363 GOLD	64 - 40	2
¤50-534363 GOLD	64 - 48	1
¤50-534363SILVER	64	2
¤50-534363SILVER	64	1
50-534430	13C- 14	4
50-534430	13C- 27	4
50-534481-7	61C	1
50-534622-1	60	1
¤50-534622-11	60	1
50-534622-13	60 - 38	1
50-534622-15	60 - 41	1
50-534622-17	60	1
50-534622-3	60	1
¤50-534622-9	60 - 37	1
50-554100	48A-125	4
50-554106	48 - 1	1
¤50-554106	48A- 1	1
¤50-554106	48A-118	1
50-554242-3	17A- 9	2
50-555018	48 - 16	1
¤50-555018	48A- 16	1
50-555019	48 - 18	1
50-555019	48A- 18	1
¤50-560012	64 - 41	2
¤50-560012	64 - 49	1
¤50-560012	64A- 36A	1
¤50-560012	64A- 53	1
¤50-560012	64A- 60	2
¤50-560012	64A- 75	2
¤50-560015	64 - 9	1
¤50-590011	7 - 15	1
¤50-590013	7 - 18	1
¤50-590014	7 - 11	1
¤50-590106	7 - 8	1
¤50-910148-71	51	8
¤50-910258	49	1
50-920008-10	57A	1
50-920008-7	57	1
50-920008-8	57 - 47	1
50-920008-9	57A- 1	1
50-920030-4	57 - 69	2
50-920030-4	57B- 17	1
50-920064	57	2
50-920064	57A- 33	2
50-920064	57D- 47	2
50-920065	57	1
50-920065-1	57	1
50-920071	57 - 48	2
50-921518	57	2
50-921520	57 - 7	4
50-921520	57A- 46	4
50-921521	57 - 6	4
50-921521	57A- 48	4
50-944036-11	58 - 27	4
50-944036-11	58A- 10	3
50-944036-13	58 - 26	2
¤50-944036-13	58A- 9	1
50-944036-3	58 - 24	2
¤50-944036-3	58A- 6	2
50-944036-7	58 - 29	4
¤50-944036-7	58A- 13	4
50-944041	58 - 25	1
50-944042	58	1
50-970101-115	70 - 26	2
50-970101-91	70 - 31	1
5000-68	47 - 4	4
50019	12	4
5010	49K- 14	4
5017850	49J- 33	6
¤504271	37 - 51	2
¤507208	17 - 20	3
¤507208	17A- 13	3
50727	42 - 9	1
51A-66	48C- 9	1
51A05	48C- 5	1
51A45	48C- 4	1
51020	60 - 16	1
¤51067	47D- 26	1
5171	10	AR
52-022-094-0437	27 - 26	4
52-022-094-0437	28 - 15	2
52-022-094-0437	31 - 64	2
52-022-094-0562	27 - 28	4
52-022-094-0562	28 - 17	4
52-028-125-0500	13A- 25	4
52-028-125-0500	57 - 74	6
52-028-125-0500	57B- 21	4
¤52-028-125-0500	57D- 98A	4
52-028-125-0625	57 - 73	2
52-028-125-0625	57B- 20	2
¤52-028-125-0625	57D- 96A	2
52-028-125-0750	13A- 18	2
52-032-156-0562	58 - 76	1
52-032-156-1120	12C- 13	2
52-032-156-1120	13B- 3	4
52A-02	48C- 10	1
5201	39 - 26	1
-524125-4	61 35	1
536-2	48B- 30	1
¤538-1	49	1
¤538-2	49 - 9	1
54A35	48C- 8	1
5427-126	57G- 16	2
55-590000-45	7	1
557-S-4	49D	2
557-S-6	49D	2
559-S-20	49D	2
56A14	48C- 14	1
560-0001	25 - 15	2
561DS4-4	54 - 33	1
561D4	54 - 17	2
561D4	54 - 20	4
5640554	57	1
5640554	57A	1
5640555	57	1

PART NUMBER	FIGURE & INDEX NO.	QTY. PER ART.
5640555	57A	1
5640556	57	1
5640556	57A- 37	1
¤5640556	57D- 87	1
5640557	57	1
5640557	57A- 40	1
5640558	57	1
5640558	57A- 41	1
5641801	57	1
5641801	57A	1
¤5641801	57D	1
5643295	61B- 15	2
5644416	61A- 13	2
5677	39	1
58-320093-10	58	1
5801N21	48B- 23	1
5801N4	48B	1
5803J13	48B- 42	1
5833B	48B- 1	1
¤5869064B	47D- 69	1
589-0068-401	25 - 16	1
59-022-094-0375	58 - 20	1
59-022-094-0375	58A- 3	1
59-022-094-0437	12 - 14	8
59-028-125-0265	12	2
593D6	48B- 3	1
6 TYPE A	64 - 32	3
6 50X8	37	2
¤6 50X8 6P TL	37 - 65	2
6 50X8 8P TT	37	2
D6-364012-5	41A- 71	1
¤6/32X1/2	47D- 22	2
6C5X-D	57B- 28	2
6C5X-D	57B- 29	1
6C5X-D	57B- 40	1
¤6C5XD	57D- 10	5
¤6LC-C6	37	4
6P6P	22A- 28	4
60-364011	58A	1
60-364011	71	1
60-364011-1	71 - 30	1
60-364011-11	71 - 34	1
60-364011-13	71 - 32	1
60-364011-15	71 - 28	1
60-364011-17	71	1
60-364011-3	71	1
60-364011-9	71	1
60-384013-5	8 - 25B	1
60-384013-5	8A- 6	1
60-384013-7	8	1
60-384013-7	8A	1
60-400011-7	8	1
60-400011-7	8A- 16	1
60-410052-1	8	1
60-410052-1	8A- 9	1
60-524080	60	1
60-524080-1	60	1
¤60-524080-3	60 - 6	1
¤60-524080-4	60	1
60-530013-11	13D- 18	2
60-530013-11	13E- 8	2
60-530013-41	13D- 37	1
60-530039-1	13D- 27	2
60-530039-1	13E- 18	2
60-530039-2	13E- 19	2
60-530039-3	13D- 28	2
60-530040-1	13D- 3	4
60-530040-1	13E- 3	4
60-530041-1	13D- 45	1
60-530041-1	13E- 26	2
60-530042	13D	1
60-530042	13E	1
60-530042-1	13D- 1	2
60-530042-1	13E- 1	2
60-530042-13	13D- 2	2
60-530042-13	13E- 2	2
60-530042-15	13D	1
60-530042-15	13E	1
60-530042-9	13D- 4	2
60-530042-9	13E- 4	2
60-530043	13D- 29	2
60-530044	13D- 35	1
60-530045	13D- 36	1
60-530046-1	13D- 32	1
60-530046-2	13D- 34	1
60-530047	13D- 38	1
60-530051-1	13D- 40	1
60-530051-1	13E- 20	2
60-530052	13D- 43	1
60-530052	13E- 22	2
60-530054-1	13D- 46	1
60-530054-1	13E- 24	2
600-001-10	57I- 5	2
¤601000-8D18-5/8	49	2
¤601000-8D18-5/8	49C- 26	2
¤601000-8D24	49	2
¤601000-8D24	49C- 27	2
¤60297-4	7	1
¤60299-16	7	1
¤6041H189	63 - 66	1
¤6041H190	49 - 84A	2
¤6041H190	49C- 13	2
¤6046H39A	63 - 34	1
¤6050CC	63	4
¤6050CC	63 - 31K	6
60882	49C	2
¤61-22	37I- 1	2
¤61173	49C- 99	1
¤61260	49C- 4	8
61941	49 - 84A	2
62-17	37I- 2	4
62255	49B- 4	4
¤624	63 - 27	1
¤62817	49C- 98	1
6350A27-0C	64A- 8	1
¤6350A34-0C	64A- 6	1
646040ICF4	61A- 7	1
646050-1F	61 - 30	1
646050ITN4	61A- 8	1
65-30	37I- 19	2

PART NUMBER	FIGURE & INDEX NO.	QTY. PER ART.
650X8	36 - 60	2
650X8	36 - 61	2
650X8	36A- 58	2
650X8	36A	2
650X8	36A- 59	2
¤65321	49C- 5	8
656768ICF	61	1
¤66-22	37I- 10	8
661062-F	61 - 31	1
66224	49B- 22	12
671BQ-010	61 - 28	1
¤68-17	37I- 9	2
¤69-4	37I- 11	4
694-180702	41 - 55	1
¤694-180702	41A- 66	1
69451	49C- 96	1
¤69510	49C- 95	1
¤69603	49C- 93	4
¤7 00X6 6P TL	37	2
¤7 00X6 6P TT	37	2
7/16-20X2 1/8	49K- 8	4
7/16-20X3	49K- 5	8
70485	49C- 92	4
711-421-1/8	58 -130	1
¤711-421-1/8	62 - 69	1
¤71579	49 - 85A	2
71811	49B	40
¤72000	49	2
¤72000	49C	2
72036	49B	2
¤72270	49C- 21	2
¤72287	49C- 20	2
72337	49 - 84	2
72373	49C- 6	2
72418	49C- 7	2
¤72462	49C	2
72464	49C	2
7274-2-5	68 - 47	1
7274-2-5	69 - 79	1
72841	49B- 3	8
¤72871	49	2
¤72871	49C	2
¤73-13	37I- 5	2
73160	49B- 15	2
73161	49B- 21	2
73163	49B- 11	2
73164	49B- 17	2
73169	49B- 2	2
73187	49B- 7	4
73189	49B	2
73194	49B- 9	2
73195	49B- 10	2
73258	49B- 1	2
734-183864	61A- 29	1
¤734-183864	61B- 55	1
73650	49B	12
73839	49B	2
73842	49B- 5	8
73843	49B	24
73868	49B- 6	4
¤74-12	37I- 7	4
74586	49C- 88	1
74587	49C- 87	1
74590	49C- 86	1
75 OHM 10 WATT	66	1
¤75-40	37I	2
¤75148	49 - 69	2
¤75220	49C	2
¤75506	49C- 9	2
¤76212	49C- 11	2
766-4	46 - 35	1
789-4	46 - 7	2
79-022-094-0375	57F- 1	2
79-022-094-0650	12C- 12	2
79-022-094-0650	13C- 10	4
79-022-094-375	57G- 1	6
79-022-094-375	57G- 3	2
¤79-028-125-1250	49 -109	8
79-032-156-0562	9A- 6	1
79-032-156-0562	9A	2
8	9	1
¤800316	64A- 31	1
¤800316	64A- 51	1
¤800316	64A- 58	2
¤800316	64A- 73	2
¤800322-00	64A- 30	1
800623-01	64A	1
¤800717-00	64A- 80	6
809945	49J- 41	2
¤81-2	37I- 13	2
¤81A16758-3/4	8 - 43	1
830-9	49K	2
831-5A	49K	2
832-24	49K	2
833-7	49K- 4	4
835-16	49	2
835-16	49C- 19	2
835-16	49K	2
835-6	49K	2
¤835-6P	49 - 88	2
¤835-6P	49C	2
838-30	49K	4
840-46	49K	2
8409	60 - 32	1
8409	60	1
¤8409	64A	1
8447-12A	49K- 23	4
8447B12A	65	4
8447B12A	66	4
¤8523517	49 - 90	2
¤8526250	49	2
¤8526250	49C- 22	2
¤8540	64 - 56	5
¤8540	64A- 81	6
¤8570	64A- 82	6
¤8580	64A- 10	1
87A37	48C- 11	2
28741-10-0325	68 7S	1
88	31 - 35	2
¤88-1	37I- 4	4

PART NUMBER	FIGURE & INDEX NO.	QTY. PER ART.
8800-K13	61 - 19	2
8801K13	58 -136E	1
¤8857K40	58A- 48	1
89	27 - 18	2
8906K1019	61A	1
8906K751	61 - 5	1
8906K752	61 - 19	2
8906K753	61 - 18	1
8906K753	61A- 43	1
8906K754	61 - 6	7
8906K754	61	4
¤8906K754	63	4
¤8906K754	63 - 31D	6
8906K762	61	2
8906K762	61A- 44	2
¤90-28	63 - 32	1
90-3-2	58 -126	1
90-3-2	58	1
900-1	13A- 21	8
900-2	12 - 6	12
900-2	12 - 26	10
900-2	13 - 9	10
900-2	13A- 22	4
¤9000591	63 -119	2
900529	49J	2
900529	49J	2
901138-K1	49D	2
901200	49D	1
904269-K1	49D	1
909091-K35	49D	1
909196-K1	49D	1
¤9095	63 - 31G	2
¤91-27	37I	2
¤92-18	37I	4
92LB	64 - 15	1
948016-01	63 - 74	2
95-000011	6	1
¤95-000012	6 - 11	2
¤95-000013	6	2
¤95-000017	6 - 23C	2
95-000018-1	6 - 13	2
95-100000-1	18	1
95-100000-2	18	1
95-10186	41B- 11	1
95-10236	41B- 2	4
95-10715	37D- 3	2
95-10715	37E- 3	2
95-10716	37D- 2	2
95-10716	37E- 2	2
¤95-10837	37A- 1	2
95-110005-1	18	1
95-110005-2	18	1
95-110005-605	18	1
95-110005-606	18	1
95-110005-609	19A- 34	1
95-110005-610	19A	1
95-110005-613	19A- 33	1
95-110005-614	19A	1
95-110005-615	19A-	1
95-110005-616	19A	1
95-110005-676	18	1
95-110005-677	18	1
95-110005-7	18	1
95-110005-8	18	1
95-110011	19 - 23	1
95-110011-3	19A- 17	1
95-110011-4	19A	1
95-110013-1	18 - 31	1
95-110013-2	18	1
95-110014-1	18	1
95-110014-1	19	REF
95-110014-100	19	1
95-110014-117	19 - 39	1
95-110014-118	19	1
95-110014-127	19 - 34	1
95-110014-127	19A- 96	1
95-110014-128	19	1
95-110014-128	19A	1
95-110014-133	19 - 33	1
95-110014-133	19A- 95	1
95-110014-139	19 - 7	1
95-110014-142	19	1
95-110014-143	19 - 8	1
95-110014-143	19A- 20	1
95-110014-146	19	1
95-110014-146	19A	1
95-110014-147	19 - 9	1
95-110014-147	19A- 22	1
95-110014-150	19	1
95-110014-150	19A	1
95-110014-153	19 - 35	1
95-110014-153	19A- 97	1
95-110014-154	19	1
95-110014-154	19A	1
95-110014-159	19 - 18	1
95-110014-159	19A- 3	1
95-110014-160	19	1
95-110014-160	19A	1
95-110014-161	2 - 16	1
95-110014-161	3	1
95-110014-162	2 - 17	1
95-110014-162	3	1
95-110014-167	19 - 40	1
95-110014-167	19A-102	1
95-110014-168	19	1
95-110014-168	19A	1
95-110014-169	2 - 14	1
95-110014-169	3	1
95-110014-172	2 - 15	1
95-110014-172	3	1
95-110014-191	19 - 36	1
95-110014-191	19A- 98	1
95-110014-192	19	1
95-110014-192	19A	1
95-110014-197	19 - 21	1
95-110014-197	19A- 23	1
95-110014-198	19	1
95-110014-198	19A	1
95-110014-199	2	1
95-110014-199	3	1

PART NUMBER	FIGURE & INDEX NO.	QTY. PER ART.
95-110014-2	18	1
95-110014-2	19	REF
95-110014-200	2	1
95-110014-200	3	1
95-110014-203	2 - 22	1
95-110014-203	3	1
95-110014-204	2 - 23	1
95-110014-204	3	1
95-110014-205	2 - 26	1
95-110014-205	3	1
95-110014-206	2 - 27	1
95-110014-206	3	1
95-110014-207	2 - 24	1
95-110014-207	3	1
95-110014-208	2 - 25	1
95-110014-208	3	1
95-110014-209	2 - 28	1
95-110014-209	3	1
95-110014-210	2 - 29	1
95-110014-210	3	1
95-110014-211	2	1
95-110014-211	3	1
95-110014-212	2	1
95-110014-212	3	1
95-110014-221	19 - 28	1
95-110014-221	19A- 30	1
95-110014-222	19	1
95-110014-222	19A	1
95-110014-223	19 - 29	1
95-110014-223	19A- 28	1
95-110014-224	19	1
95-110014-224	19A	1
95-110014-225	19 - 26	1
95-110014-225	19A- 29	1
95-110014-226	19	1
95-110014-226	19A	1
95-110014-227	19 - 25	1
95-110014-227	19A- 27	1
95-110014-228	19	1
95-110014-228	19A	1
95-110014-229	19 - 27	1
95-110014-229	19A- 26	1
95-110014-230	19	1
95-110014-230	19A	1
95-110014-253	18 - 52	1
95-110014-253	27	4
95-110014-258	19 - 31	1
95-110014-260	2 - 13	1
95-110014-260	3	1
95-110014-263	19 - 30	1
95-110014-263	19A- 31	1
95-110014-264	19	1
95-110014-264	19A	1
95-110014-265	19 - 10	1
95-110014-265	19A- 24	1
95-110014-268	19	1
95-110014-268	19A	1
95-110014-269	19 - 12	1
95-110014-269	19A- 25	1
95-110014-270	19	1
95-110014-270	19A	1
95-110014-271	2	1
95-110014-271	3	1
95-110014-274	2	1
95-110014-274	3	1
95-110014-275	19 - 15	1
95-110014-276	19	1
95-110014-291	19 - 16	1
95-110014-292	19	1
95-110014-295	19 - 2	1
95-110014-295	19A- 2	1
95-110014-296	19	1
95-110014-296	19A	1
95-110014-297	18 - 54	1
95-110014-297	19A- 5	1
95-110014-298	18	1
95-110014-298	19A	1
95-110014-308	19	1
95-110014-308	19A	1
95-110014-315	19 - 37	1
95-110014-315	19A- 99	1
95-110014-316	19	1
95-110014-316	19A	1
95-110014-317	19 - 38	1
95-110014-317	19A-100	1
95-110014-318	19	1
95-110014-318	19A	1
95-110014-321	18 - 55	1
95-110014-321	19A- 4	1
95-110014-322	18	1
95-110014-322	19A	1
95-110014-323	2	1
95-110014-323	3	1
95-110014-324	2	1
95-110014-324	3	1
95-110014-339	18 - 46	2
95-110014-34	19	1
95-110014-341	18	2
95-110014-35	19 - 22	1
95-110014-355	18	2
95-110014-357	19 - 14	1
95-110014-357	19A- 21	1
95-110014-358	19	1
95-110014-358	19A	1
95-110014-365	18 - 33	1
95-110014-366	18	1
95-110014-369	19	1
95-110014-371	19	1
95-110014-393	2 - 30	1
95-110014-394	2 - 31	1
95-110014-395	2 - 18	1
95-110014-396	2 - 19	1
95-110014-399	2 - 32	1
95-110014-400	2 - 33	1
95-110014-403	19A-101	1
95-110014-404	19A	1
95-110014-409	19A- 19	1
95-110014-41	19 - 42	1
95-110014-41	19A-104	1
95-110014-412	19A	1

PART NUMBER	FIGURE & INDEX NO.	QTY. PER ART.
95-110014-413	2 - 20	1
95-110014-416	2 - 21	1
95-110014-417	19A-105	1
95-110014-418	19A	1
95-110014-42	19	1
95-110014-42	19A	1
95-110014-441	19A-106	2
95-110014-47	19 - 24	1
95-110014-48	19	1
95-110014-601	19 -	1
95-110014-602	19	1
95-110014-612	19A- 32	1
95-110014-613	19A- 12	1
95-110014-614	19A	1
95-110014-615	19A- 13	1
95-110014-616	19A	1
95-110014-617	19A- 14	1
95-110014-618	19A	1
95-110014-619	19A- 15	1
95-110014-620	19A	1
95-110014-623	19A- 10	1
95-110014-624	19A	1
95-110014-63	19 - 41	1
95-110014-63	19A-103	1
95-110014-639	19A- 16	1
95-110014-64	19	1
95-110014-64	19A	1
95-110014-640	19A	1
95-110014-641	19A- 11	1
95-110014-642	19A	1
95-110014-677	19A- 1	1
95-110014-678	19A	1
95-110014-69	18	1
95-110014-70	18	1
95-110014-77	19 - 32	1
95-110014-78	19	1
95-110014-85	19 - 19	1
95-110014-86	19 - 20	1
95-110014-99	19 - 17	1
95-110015-1	18	1
95-110015-1	19	REF
95-110015-10	19A	1
95-110015-100	19	1
95-110015-101	2	1
95-110015-101	3	1
95-110015-102	2	1
95-110015-102	3	1
95-110015-103	2 - 3	1
95-110015-103	3	1
95-110015-104	2 - 4	1
95-110015-104	3	1
95-110015-107	2	1
95-110015-107	3	1
95-110015-108	2	1
95-110015-108	3	1
95-110015-109	3	1
95-110015-11	19A- 68	1
95-110015-110	3	1
95-110015-13	19A- 69	1
95-110015-131	19 - 58	1
95-110015-132	19	1
95-110015-135	19 - 57	1
95-110015-136	19	1
95-110015-14	19A	1
95-110015-15	19A- 70	1
95-110015-153	19 - 51	1
95-110015-153	19A- 41	1
95-110015-154	19	1
95-110015-154	19A	1
95-110015-155	19 - 50	1
95-110015-155	19A- 40	1
95-110015-156	19	1
95-110015-156	19A	1
95-110015-157	19 - 49	1
95-110015-157	19A- 39	1
95-110015-158	19	1
95-110015-158	19A	1
95-110015-159	18 - 27	1
95-110015-16	19A	1
95-110015-160	18	1
95-110015-161	19 - 48	1
95-110015-162	19	1
95-110015-163	19 - 47	1
95-110015-164	19	1
95-110015-165	2	1
95-110015-165	3	1
95-110015-166	2	1
95-110015-166	3	1
95-110015-169	2 - 5	1
95-110015-169	3	1
95-110015-17	19A- 71	1
95-110015-170	2 - 6	1
95-110015-170	3	1
95-110015-171	2	1
95-110015-171	3	1
95-110015-172	2	1
95-110015-172	3	1
95-110015-175	2 - 7	1
95-110015-175	3	1
95-110015-176	2 - 8	1
95-110015-176	3	1
95-110015-177	2	1
95-110015-177	3	1
95-110015-178	2	1
95-110015-178	3	1
95-110015-179	3	1
95-110015-18	19A	1
95-110015-180	3	1
95-110015-183	18	1
95-110015-183	19	REF
95-110015-184	18	1
95-110015-184	19	REF
95-110015-19	19A- 72	1
95-110015-2	18	1
95-110015-2	19	REF
95-110015-20	19A	1
95-110015-21	19A- 73	1
95-110015-22	19A	1
95-110015-23	19A- 74	1
95-110015-24	19A	1

PART NUMBER	FIGURE & INDEX NO.	QTY. PER ART.
95-110015-25	19A- 76	1
95-110015-26	19A	1
95-110015-27	19A- 75	1
95-110015-28	19A	1
95-110015-29	19A- 78	1
95-110015-30	19A	1
95-110015-31	19A- 77	1
95-110015-32	19A	1
95-110015-33	2	1
95-110015-33	3	1
95-110015-34	2	1
95-110015-34	3	1
95-110015-45	2	1
95-110015-45	3	1
95-110015-46	2	1
95-110015-46	3	1
95-110015-5	2 - 1	1
95-110015-5	3	1
95-110015-55	19 - 61	1
95-110015-56	19	1
95-110015-57	19 - 60	1
95-110015-58	19	1
95-110015-6	2 - 2	1
95-110015-63	19	1
95-110015-64	19	1
95-110015-67	19 - 55	1
95-110015-67	19A- 47	1
95-110015-68	19	1
95-110015-68	19A	1
95-110015-7	19 - 54	1
95-110015-72	19A	1
95-110015-8	19	1
95-110015-81	19 - 43	1
95-110015-81	19A- 36	1
95-110015-82	19	1
95-110015-82	19A	1
95-110015-83	19 - 45	1
95-110015-84	19	1
95-110015-85	19 - 46	1
95-110015-86	19	1
95-110015-87	2	1
95-110015-87	3	1
95-110015-9	19A- 67	1
95-110015-95	19 - 56	1
95-110015-96	19	1
95-110015-97	19 - 44	1
95-110015-98	19	1
95-110015-99	19 - 59	1
95-110021	18 - 9A	2
95-110021-1	18 - 9J	2
95-110022-1	19 - 5	1
95-110022-2	19	1
95-110022-601	19	1
95-110022-601	19A- 18	1
95-110022-602	19	1
95-110022-602	19A	1
95-110023-1	19 - 11	1
95-110023-2	19	1
95-110023-601	19	1
95-110023-601	19A- 9	1
95-110023-602	19	1
95-110023-602	19A	1
95-110024-1	18 - 56	1
95-110024-2	18	1
95-110025-1	18 - 9C	4
95-110025-3	18 - 9H	2
95-110026	19 - 6	1
95-110026-601	19	1
95-110026-601	19A- 8	1
95-110027	19	1
95-110027-601	19	1
95-110027-602	19A	1
95-110030	19 - 3	1
95-110030-601	19	1
95-110030-601	19A- 7	1
95-110031	19 - 1	1
95-110031-601	19	1
95-110031-601	19A- 6	1
95-110032	19	1
95-110032-601	19	1
95-110032-601	19A	1
95-110036	19	1
95-110037	19 - 4	1
95-110038	18	1
95-110038-3	18 - 60A	1
95-110038-4	18	1
95-110038-5	18 - 60B	1
95-110038-6	18	1
95-110039	19	1
95-110039-1	19A	1
95-110041-11	19A- 61	1
95-110041-12	19A	1
95-110041-15	19A- 54	1
95-110041-16	19A	1
95-110041-17	19A- 55	1
95-110041-18	19A	1
95-110041-19	19A- 58	1
95-110041-20	19A	1
95-110041-5	19A- 62	1
95-110041-6	19A	1
□95-11084	37A- 14	20
95-130000	21A-	2
95-130000-1	21A- 3	2
95-130000-10	21A- 13	2
95-130000-11	21A- 23	4
95-130000-13	21A- 10	2
95-130000-15	21A- 11	2
95-130000-3	2 - 50	2
95-130000-3	21A- 5	2
95-130000-3	3	1
95-130000-5	21A- 4	2
95-130000-7	2 - 51	2
95-130000-7	21A- 12	2
95-130000-9	21A	2
95-160000-1	22	1
95-160000-10	22A	1
95-160000-13	22A- 17	1
95-160000-14	22A	1
95-160000-17	22A- 18	1
95-160000-18	22A	1

PART NUMBER	FIGURE & INDEX NO.	QTY. PER ART.
95-160000-19	2	1
95-160000-19	3	1
95-160000-2	22	1
95-160000-20	2	1
95-160000-20	3	1
95-160000-21	22A- 31	1
95-160000-25	22A- 19	1
95-160000-26	22A	1
95-160000-27	2	1
95-160000-27	3	1
95-160000-28	2	1
95-160000-28	3	1
95-160000-29	3	1
95-160000-3	22A- 5	1
95-160000-30	3	1
95-160000-31	22A- 25	1
95-160000-33	2	1
95-160000-33	3	1
95-160000-34	2	1
95-160000-34	3	1
95-160000-35	22A- 26	1
95-160000-39	2	1
95-160000-39	3	1
95-160000-4	22A	1
95-160000-40	2	1
95-160000-40	3	1
95-160000-5	22A- 15	1
95-160000-6	22A	1
95-160000-601	22	1
95-160000-602	22	1
95-160000-9	22A- 16	1
95-160001-10	2 - 47	1
95-160001-10	22A	1
95-160001-11	22A- 4	1
95-160001-12	22A	1
95-160001-13	22A- 30	2
95-160001-15	22A- 29	1
95-160001-16	22A	1
95-160001-3	2 - 48	1
95-160001-3	22A- 23	1
95-160001-3	3	1
95-160001-4	2 - 49	1
95-160001-4	22A	1
95-160001-4	3	1
95-160001-5	2 - 44	1
95-160001-5	22A- 21	1
95-160001-5	3	1
95-160001-6	2 - 45	1
95-160001-6	22A	1
95-160001-6	3	1
95-160001-601	22A-	1
95-160001-602	22A	1
95-160001-7	22A- 22	1
95-160001-8	22A	1
95-160001-9	2 - 46	1
95-160001-9	22A- 20	1
95-170000-1	18	1
95-170000-1	19	1
95-170000-10	2 - 41	1
95-170000-10	3	1
95-170000-11	2 - 42	1
95-170000-11	3	1
95-170000-12	2 - 43	1
95-170000-12	3	1
95-170000-19	19 - 69	1
95-170000-19	19A- 83	1
95-170000-2	18	1
95-170000-2	19	REF
95-170000-20	19	1
95-170000-20	19A	1
95-170000-21	19 - 70	1
95-170000-21	19A- 84	1
95-170000-22	19	1
95-170000-22	19A	1
95-170000-23	19 - 71	1
95-170000-23	19A- 85	1
95-170000-24	19	1
95-170000-24	19A	1
95-170000-25	19 - 72	1
95-170000-25	19A- 86	1
95-170000-26	19	1
95-170000-26	19A	1
95-170000-29	19 - 74	1
95-170000-29	19A- 88	1
95-170000-3	2 - 34	1
95-170000-3	3	1
95-170000-30	19	1
95-170000-30	19A	1
95-170000-31	19 - 77	1
95-170000-31	19A- 91	1
95-170000-32	19	1
95-170000-32	19A	1
95-170000-33	19 - 78	1
95-170000-33	19A- 92	1
95-170000-34	19A	1
95-170000-35	19 - 67	2
95-170000-35	19A- 81	1
95-170000-36	19	2
95-170000-36	19A	1
95-170000-37	19 - 68	2
95-170000-37	19A- 82	1
95-170000-38	19	2
95-170000-38	19A	1
95-170000-39	19 - 75	1
95-170000-39	19A- 89	1
95-170000-4	2 - 35	1
95-170000-4	3	1
95-170000-40	19	1
95-170000-40	19A	1
95-170000-41	19 - 76	1
95-170000-41	19A- 90	1
95-170000-42	19	1
95-170000-42	19A	1
95-170000-45	19 - 66	1
95-170000-45	19A- 80	1
95-170000-46	19	1
95-170000-46	19A	1
95-170000-5	2 - 36	1
95-170000-5	3	1
95-170000-6	2 - 37	1

PART NUMBER	FIGURE & INDEX NO.	QTY. PER ART.
95-170000-6	3	1
95-170000-601	18	1
95-170000-601	19	1
95-170000-601	19A	1
95-170000-602	18	1
95-170000-602	19	1
95-170000-602	19A	1
95-170000-63	19 - 79	1
95-170000-63	19A- 93	1
95-170000-64	19	1
95-170000-64	19A	1
95-170000-65	19 - 73	1
95-170000-65	19A- 87	1
95-170000-66	19	1
95-170000-66	19A	1
95-170000-7	2 - 38	1
95-170000-7	3	1
95-170000-8	2 - 39	1
95-170000-8	3	1
95-170000-9	2 - 40	1
95-170000-9	3	1
95-1989	37H- 19	2
95-20653	41	1
95-20653	41B-	1
¤95-20656	37A- 13	20
95-20925	41B- 8	1
95-21521	37A- 20	2
¤95-21522	37A- 12	2
95-21528	37A- 16	2
95-22134	37D- 13	2
95-22134	37E- 10	2
95-23545	37D- 8	2
95-23546	37A- 19	2
95-23566	41B- 9	1
95-23937	37D- 17	10
¤95-24192	41C- 5	1
¤95-24218	37A- 22	4
¤95-24218	37C- 1	4
95-24223	37E- 8	2
¤95-24231	37A- 30	2
95-24232	37A- 27	2
95-24303	37E- 6	2
¤95-24804	37F- 5	4
¤95-24805	37F- 4	4
¤95-24834	37F- 6	4
¤95-25419	41C- 7	1
¤95-26274	37F	4
¤95-26275	37F	4
95-300001-1	37B	2
95-300001-11	37B- 6	2
¤95-300001-13	37B- 8	2
¤95-300001-15	37G	1
¤95-300001-16	37G	1
95-300001-17	37G	2
95-300001-29	37B	2
¤95-300001-3	37B- 5	2
95-300001-31	37B	2
95-300001-31	37C- 10	2
95-300001-31	37C- 17	2
95-300001-33	37B	2
95-300001-37	37G- 1	1
95-300001-38	37G	1
¤95-300001-39	37G- 2	2
¤95-300001-41	37G- 3	2
¤95-300001-43	37G- 5	2
¤95-300001-45	37G- 10	2
¤95-300001-49	37G- 9	2
¤95-300001-5	37	1
95-300001-5	37G	1
¤95-300001-51	37G- 12	2
¤95-300001-53	37G- 13	2
¤95-300001-57	37G- 16	2
¤95-300001-59	37G- 19	2
¤95-300001-6	37	1
¤95-300001-6	37G	1
¤95-300001-61	37G- 25	2
95-300001-63	37G	1
95-300001-64	37G	1
95-300001-64	37H- 18	2
95-300001-65	37G	2
¤95-300001-67	37B	2
95-300001-69	37B	2
¤95-300001-71	37B	2
¤95-300001-73	37B	2
¤95-300001-77	37G- 14	2
¤95-300001-79	37B	2
95-300001-83	37B	2
95-300001-9XS	37G	2
95-30468	37D- 1	2
95-31159	37D- 15	2
95-31711	36 - 58	2
95-31711	36A- 56	2
95-31711	37A	2
95-31712	36 - 56	2
95-31712	36A- 54	2
95-31712	37D-	2
95-31719	37D- 6	2
95-32102	41	1
95-32135	36A	2
95-32135	37 - 62	2
95-32135	37A	2
95-32166	37E- 1A	2
¤95-32166	37F- 1	2
95-32167	36A	2
95-32167	37E-	2
95-3218	36A- 65	2
¤95-3218	37H- 13	2
95-324000	61C-	1
95-324000-1	61C	1
95-324000-3	61C	1
95-324000-5	61C	1
95-324005-33	61 - 8	1
95-324005-33	61A- 16	1
95-324005-33	61B- 25	1
95-324005-33	61C- 67	1
95-324005-43	61 - 1	1
95-324005-43	61A	1
¤95-324005-43	61B- 33	1
95-324006	58	1
95-324006-10	58A	1

PART NUMBER	FIGURE & INDEX NO.	QTY. PER ART.
95-324006-101	58	1
95-324006-103	58 - 4	1
95-324006-105	58	1
95-324006-107	58A-121	1
95-324006-109	58 - 72	1
95-324006-111	58 -136C	1
95-324006-113	58 -136J	1
95-324006-115	58	1
95-324006-117	58	1
95-324006-119	58 -143	1
95-324006-119	58A- 98	1
95-324006-121	58 -154	2
95-324006-123	58A- 37	1
95-324006-124	58A	1
95-324006-125	58	1
95-324006-125	58A	1
95-324006-129	58 -120	1
95-324006-13	58 -151	1
95-324006-131	58 -121	1
95-324006-133	58 -119	1
95-324006-135	58 - 32	1
¤95-324006-135	58A- 14	1
95-324006-139	58 - 31	1
95-324006-139	58A- 15	1
95-324006-143	58 - 30	1
95-324006-143	58A- 11	1
95-324006-147	58 - 28	1
95-324006-147	58A- 12	1
95-324006-15	58	1
95-324006-151	58	1
95-324006-151	58A	1
95-324006-155	58 -106	1
95-324006-155	58A-127	1
95-324006-157	58	1
95-324006-157	58A	1
95-324006-159	58 -137	1
¤95-324006-159	58A- 45	1
95-324006-16	58 -129A	1
95-324006-161	58 -138	1
95-324006-163	58A- 43	1
95-324006-165	58A- 99	1
95-324006-167	58	1
95-324006-169	58 -139	1
¤95-324006-169	58A- 44	1
95-324006-171	58 -152	1
95-324006-193	58	1
95-324006-193	58A- 7	1
95-324006-195	58	1
95-324006-197	58	1
95-324006-197	58A- 8	1
95-324006-199	58	1
95-324006-243	58A- 25	2
95-324006-257	58 - 17A	1
95-324006-257	58A- 22	1
95-324006-259	58 - 18A	5
95-324006-261	58	1
95-324006-265	58 - 18	1
¤95-324006-269	58A- 23	4
95-324006-3	58 -111	1
95-324006-35	58 -144A	1
¤95-324006-35	58A-102	1
95-324006-37	58A-119	1
95-324006-39	58A-120	1
95-324006-41	58 - 2	1
95-324006-41	59 -	1
95-324006-43	59	1
95-324006-45	59	1
95-324006-47	59 - 16	1
95-324006-49	59 - 21	1
95-324006-5	58 - 45	1
95-324006-5	58A- 84	1
95-324006-55	58 -118	1
95-324006-57	58 - 6	1
95-324006-58	58	1
95-324006-59	58 -106A	1
95-324006-59	58A-126	1
95-324006-601	58A	1
95-324006-7	58	2
95-324006-7	58 -109	1
95-324006-71	58	1
95-324006-73	58 - 42	1
95-324006-75	58 -148	1
¤95-324006-75	58A-101	1
95-324006-8	58	1
95-324006-83	58A- 38	1
95-324006-84	58A	1
95-324006-85	58A- 36	1
95-324006-87	58 -124	1
¤95-324006-87	58A- 35	1
95-324006-89	58 -109A	1
95-324006-89	58A- 34	1
95-324006-9	58A-117	1
95-324006-91	58A- 33	1
95-324006-93	58A- 32	1
95-324006-96	58	1
95-324006-97	58 -123	2
95-324007-1	61A	1
95-324007-11	61A	1
95-324007-3	61A	1
95-324007-5	61A-	1
95-324008-11	61B	1
95-324008-15	61B	1
95-324008-21	61B-	1
95-324008-23	61B	1
95-324008-25	61B	1
95-324008-43	61B- 6	1
95-324008-43	61C- 10	1
95-324008-9	61B	1
95-324009	61C	1
95-324009-1	61C	1
95-324009-5	61C	1
95-324009-7	61C	1
95-324009-9	61C	1
95-324011-11	61 - 24	1
95-324011-13	61 - 23	2
95-324011-15	61 - 34	1
95-324011-19	61 - 25	2
95-324011-23	61	2
95-324011-27	61A- 9	1
95-324011-29	61A- 4	2

PART NUMBER	FIGURE & INDEX NO.	QTY. PER ART.
95-324011-3	61 - 27	1
95-324011-31	61A- 5	1
95-324011-33	61A- 1	1
95-324011-35	61A	1
95-324011-37	61	2
95-324011-39	61	2
95-324011-39	61A- 2	2
95-324011-41	61A- 3	2
95-324011-5	61	2
95-324011-55	61B- 22	1
95-324011-59	61B- 21	1
95-324011-7	61 - 33	1
95-324011-9	61 - 37	2
95-324012	61 -	1
95-324012	61A	1
▫95-324012	61B-	1
95-324012-11	61A- 26	1
95-324012-11	61B- 52	1
95-324012-13	61 - 12	1
95-324012-13	61A	1
95-324012-13	61B	1
95-324012-15	61 - 13	2
95-324012-15	61A- 27	2
95-324012-15	61B- 53	2
95-324018	62	1
95-324018-107	62	1
95-324018-107	62A- 48	1
95-324018-11	62	1
▫95-324018-111	62 - 34	1
▫95-324018-111	62A- 56	1
95-324018-113	62	1
95-324018-115	62 - 35	1
95-324018-115	62A- 59	1
95-324018-119	62	1
95-324018-119	62A- 60	1
95-324018-123	62A- 57	1
▫95-324018-135	62 - 7	1
▫95-324018-135	62A- 6	3
95-324018-137	62	4
95-324018-137	62A- 89	2
95-324018-139	62 - 62	1
95-324018-141	62 - 60	2
95-324018-141	62A- 11	2
95-324018-141	62B- 11	2
▫95-324018-143	62 - 4	2
95-324018-145	62 - 15	1
95-324018-147	62 - 46	1
95-324018-149	62	1
95-324018-15	62	1
▫95-324018-151	62 - 2	1
▫95-324018-151	62A- 2	1
95-324018-187	62	1
95-324018-19	62	1
95-324018-191	62 - 47	1
95-324018-195	62 - 45	1
95-324018-201	62 - 13	1
95-324018-205	62 - 14	1
95-324018-211	62 - 19	1
95-324018-211	62A- 16	1
95-324018-213	62 - 8	2
95-324018-213	62A- 14	2
95-324018-217	62A	1
95-324018-221	62A- 5	1
95-324018-223	62A- 7	1
95-324018-229	62A- 28	1
95-324018-229	62B- 14	1
95-324018-231	62A- 29	1
95-324018-231	62B- 6	1
95-324018-235	62A- 32	1
95-324018-237	62A- 33	1
95-324018-25	62 - 16	1
95-324018-25	62A- 20	1
▫95-324018-27	62 - 23	1
95-324018-3	62 - 5	1
95-324018-31	62 - 29	1
95-324018-31	62A- 44	1
95-324018-31	62B- 15	1
95-324018-35	62 - 30	1
95-324018-35	62A- 47	1
95-324018-39	62 - 26	1
95-324018-43	62	1
95-324018-43	62A- 45	1
95-324018-43	62B- 1	1
95-324018-47	62 - 41	1
▫95-324018-51	62A- 67	2
95-324018-55	62	1
95-324018-65	62 - 9	1
95-324018-67	62 - 24	1
95-324018-7	62 - 10	1
95-324018-7	62A- 9	1
95-324018-71	62	1
95-324018-75	62 - 61	1
95-324018-79	62 - 31	1
95-324018-83	62	1
95-324018-87	62 - 43	1
95-324018-91	62 - 48	1
95-324018-95	62	1
95-324018-99	62	1
95-324020	58 -127	1
95-324023	61 - 9	1
95-324024	58 -125	1
95-324028	62	2
95-324028	62A	1
▫95-324030	6 - 20	1
95-324035-1	61	1
95-324035-11	61 -	1
95-324035-25	61	1
95-324035-27	61 - 4	1
95-324035-29	61	1
95-324035-3	61	1
95-324035-3	61A	1
95-324035-39	61	1
95-324035-43	61	1
95-324035-45	61	1
95-324035-47	61	1
95-324035-49	61A- 14	2
95-324035-5	61 - 14	1
95-324035-5	61A- 39	1
▫95-324035-5	61B- 36	1
95-324035-53	61A	1

PART NUMBER	FIGURE & INDEX NO.	QTY. PER ART.
95-324035-53	61B	1
95-324035-55	61A- 6	1
95-324035-59	61B- 20	1
95-324035-61	61A- 10	1
95-324035-63	61A- 11	1
95-324035-65	61A- 12	1
95-324035-67	61A	1
95-324035-69	61A	1
95-324038	15	1
95-324038-1	15 - 18	1
95-324038-13	15	1
95-324038-15	15 - 30	1
95-324038-17	15 - 31	1
95-324038-21	15	1
95-324038-23	15 - 1	1
95-324038-29	15	1
▫95-324038-29	61C- 8	1
95-324038-3	15 - 21	1
95-324038-31	15 - 2	1
95-324038-33	15	1
95-324038-35	15 - 4	1
95-324038-37	61C- 5	1
95-324038-39	15 - 5	2
95-324038-39	15 - 10	1
95-324038-39	61C- 4	1
95-324038-41	15	1
95-324038-43	15 - 9	1
95-324038-49	15 - 17	1
95-324038-49	15 - 20	1
95-324038-5	15	1
95-324038-51	15	1
95-324038-53	15	1
95-324038-59	15	1
95-324038-61	15	1
95-324038-63	15	1
▫95-324038-63	61C	1
95-324038-65	15	1
95-324038-65	61C- 3	1
95-324038-67	15	1
95-324038-69	15	1
95-324038-7	15 - 23	1
95-324038-9	15 - 24	1
95-324040	15	1
▫95-324042	6 - 12	1
95-324043-1	62 - 67	1
▫95-324043-3	62 - 63	2
95-324044	15	1
95-324044-13	15	1
95-324044-3	15	1
95-324044-7	15	1
95-324045	15 - 19	1
95-324045-1	15	1
95-324046	58 -129	1
▫95-324050	6 - 10	1
95-324053	15 - 28	1
95-324054-1	61	1
95-324056	63 - 31C	1
95-324057	61	1
95-324059	61A- 32	1
95-324059	61B- 26	1
95-324060	61A- 18	1
95-324060	61B- 31	1
95-324061	61A- 15	1
▫95-324061	61B- 24	1
95-324062	63	1
95-324063	61A- 20	1
▫95-324063	61B- 29	1
▫95-324063	61C- 37	1
▫95-324065	6	1
95-324069	61C-	1
95-324069-1	61C	1
95-324069-3	61C	1
95-324069-5	61C	1
95-324072	62A-	1
95-324072-1	62A	1
95-324072-11	62A- 42	1
95-324072-15	62A- 40	1
95-324072-19	62A- 51	1
95-324072-21	62A- 53	1
95-324072-25	62A- 50	1
95-324072-3	62A	1
95-324072-31	62A- 36	1
95-324072-33	62A- 38	1
95-324072-35	62A- 37	1
95-324072-37	62A- 35	1
95-324072-49	62A- 41	1
95-324072-5	62A	1
95-324072-57	62A	1
95-324072-7	62A- 65	1
95-324072-9	62A- 64	1
95-324073	62A- 76	1
95-324073-37	62A	1
95-324074-1	61C-	1
95-324074-1	61C	1
95-324076-601	62	1
95-324078-1	62B	1
95-324078-13	62B- 2	1
95-324078-15	62B- 5	1
95-324078-17	62B- 16	1
95-324078-19	62B- 17	1
95-324078-21	62B- 18	1
95-324078-23	62B- 13	1
95-324078-47	62B- 7	1
95-324078-49	62B- 8	1
95-324078-5	62B	1
95-324078-51	62B- 10	1
95-324078-53	62B- 12	1
95-324107-1	62A- 1	1
95-324107-3	62A- 1A	1
95-324115-2	61 - 2	1
95-32412	36A	2
▫95-32412	37F	2
95-324125-3	61C	1
95-324125-5	61C	1
95-324266	58A- 92	1
▫95-32669	41A- 6	1
▫95-32669	41C-	1
▫95-32671	41C	1
95-32671	41C- 8	1
▫95-32672	41C	1

PART NUMBER	FIGURE & INDEX NO.	QTY. PER ART.
95-32679	36A	2
▫95-32679	37 - 60	2
▫95-32679	37F	2
▫95-32684	37F	2
▫95-32926	41A	1
▫95-32926	41C	1
▫95-3295	37A- 2	2
▫95-32954	37A- 32	10
▫95-3298	37A- 7	2
▫95-3305	37A- 6	2
95-344010	63	1
95-344010-1	63 - 93	1
95-344027	61	1
95-344032	15 - 35	1
▫95-344056-11	64A- 1	2
95-344056-37	64A- 5	1
95-344056-39	64A- 3	2
95-344056-41	64A	1
95-344056-43	64A- 2	1
95-344056-47	64A- 4	1
▫95-35451	37H- 4	2
▫95-35452	37H- 10	8
▫95-35454	37H- 9	2
95-35522	37C- 16	2
95-35523	37C- 9	2
95-35576	37C- 11	2
▫95-35577	37H- 16	2
▫95-35625	37H- 17	2
95-360000	63	1
95-360000-1	63 - 19	1
95-360000-13	61C- 81	1
95-360000-13	63 - 31N	1
95-360000-3	63 - 21	1
95-360000-5	63 - 24	1
95-360000-604	17	1
▫95-360000-7	63	2
95-360001	63	1
95-360002-676	47D	1
95-360012	63	1
95-360012-15	63 -106A	1
95-360012-17	63 -108	1
▫95-360012-23	63	1
95-360012-25	63 -104	1
95-360012-27	63	1
95-360014-676	47D	1
95-360014-677	47D	1
95-361014	36	1
95-361014	36A	1
95-361014	63	1
95-361015	36	1
95-361015	36A	1
95-361015	37	1
95-361015	63 - 7	1
95-361016	63	1
95-361017	63 - 48	1
95-361018	63	1
95-364011	63	1
▫95-364011-601	63 -	1
95-364012	63 -	1
95-364013	63	1
▫95-364013-1	63	1
▫95-364013-3	63	1
95-364020	61	1
95-364021	15 - 27	1
95-364021	15 - 34	1
▫95-364022	63	1
▫95-364023	63	1
95-364024	63	1
95-364024-3	63	1
▫95-364024-5	63	1
95-364024-7	63	1
▫95-364025-1	63	1
95-364025-3	63	1
95-364025-7	63 - 31A	1
▫95-364025-9	63	1
95-364026	63 - 31B	1
95-364027	63	1
95-364027-1	63	1
95-364027-13	63	1
▫95-364027-15	63	1
▫95-364027-3	63	1
▫95-364027-5	63 -103A	1
95-364027-7	63 -102	1
95-364029-1	63 - 30A	1
95-364029-3	61C- 80	1
▫95-364030	63	1
▫95-364032-1	41A	1
95-364035	63	1
95-364035-1	63	1
95-364060-7	61C	1
95-369010-1	57	1
95-369010-2	57 - 2	1
95-369010-3	57	1
95-369010-4	57 - 3	1
95-369011-1	52	2
95-369011-5	52 - 1	2
95-369012	49 - 78	2
95-369012	49 - 82	1
95-369012	49C- 16	3
95-380005-1	52A- 11	2
95-380006	53A- 2	2
▫95-380007	47C- 3	1
▫95-380009	49A- 11	2
▫95-380009	49C- 51	2
95-380010	10	1
▫95-380012-5	57D	1
▫95-380012-5	57D	1
▫95-380012-7	57D	1
▫95-380012-7	57D	1
95-380013-1	57A	1
▫95-380013-1	57D- 88	1
95-380013-3	57A	1
▫95-380013-3	57D	1
95-380013-5	57A	1
▫95-380013-5	57D- 89	1
95-380013-7	57A	1
▫95-380013-7	57D	1
▫95-380014-1	61B- 3	1
▫95-380014-1	61C- 14	1
95-380015-1	57D	1

PART NUMBER	FIGURE & INDEX NO.	QTY. PER ART.
95-380015-2	57D	1
¤95-380015-3	57D	1
95-380015-3	61C- 18	1
95-380015-3	61C- 48	1
95-380015-4	57D	1
¤95-380016-1	61B- 8	1
¤95-380016-1	61C- 13	1
¤95-380017	61B- 16	2
95-380017	61C	2
¤95-380017-1	61C- 20	2
95-380017-3	61C	2
95-380018	61A	2
¤95-380018	61B- 12	2
¤95-380018	61C- 19	2
¤95-380019	61C- 15	1
¤95-380020	61B- 2	1
¤95-380020	61C- 11	1
¤95-380027-1	57D- 1	1
¤95-380027-2	57D	1
95-400005	8 -	1
95-400005-634	8	1
95-400006	8	1
95-400006-634	8	1
95-400006-638	8 - 39A	1
95-400007	8	1
95-400008	8	1
95-400008-1	8	1
95-400008-3	8	1
95-400008-5	8	1
95-400008-7	8	1
95-400008-9	8	1
95-400012	8 - 75	1
95-400012	16	1
95-410005	8	1
95-410005-125	8 - 6	2
95-410005-127	8 - 8	2
95-410005-13	5	1
95-410005-13	5	1
¤95-410005-141	8 - 3	1
95-410005-157	8 - 9	2
95-410005-157	8	1
95-410005-161	8	1
95-410005-163	8	1
95-410005-169	8 - 11	1
¤95-410005-177	63 -122	1
95-410005-179	8	1
¤95-410005-187	3 - 2	1
95-410005-187	4 - 2	1
¤95-410005-187	4A- 2	1
95-410005-187	4	1
¤95-410005-193	8 - 12	1
95-410005-195	8 - 10	1
95-410005-197	8 - 5	1
95-410005-199	8	1
95-410005-201	8 - 36	1
¤95-410005-39	8 - 2	1
¤95-410005-49	8 - 1	1
95-410005-5	5 - 2	1
95-410005-5	5	1
¤95-410005-51	3 - 18	1
95-410005-51	4 - 21	1
¤95-410005-51	4A- 21	1
95-410005-51	4	1
¤95-410005-52	3 - 28	1
95-410005-52	4 - 22	1
¤95-410005-52	4A- 22	1
95-410005-52	4	1
¤95-410005-53	3 - 1	1
95-410005-53	4 - 1	1
¤95-410005-53	4A- 1	1
95-410005-53	4	1
¤95-410005-55	3 - 45	1
95-410005-55	4 - 49	1
¤95-410005-55	4A- 50	1
95-410005-55	4	1
¤95-410005-57	3 - 46	1
95-410005-57	4 - 50	1
¤95-410005-57	4A- 49	1
95-410005-57	4	1
¤95-410005-59	3 - 29	1
95-410005-59	4 - 31	1
¤95-410005-59	4A- 31	1
95-410005-59	4	1
95-410005-61	3 - 30	1
95-410005-61	4 - 32	1
¤95-410005-61	4A- 30	1
95-410005-61	4	1
95-410005-611	8 - 4	1
95-410005-7	5	1
95-410005-7	5	1
95-410005-81	8	1
95-410006	8	1
¤95-410006-1	8	1
95-410006-107	8	1
95-410006-107	8A-	1
95-410006-113	8A- 14	1
95-410006-115	8 - 32A	1
95-410006-115	8A- 11	2
95-410006-117	8	1
95-410006-117	8A- 13	1
95-410006-119	8A	1
95-410006-121	8A	1
95-410006-123	8A	1
95-410006-125	8A	1
95-410006-19	8	1
95-410006-21	8	1
95-410006-25	8	1
95-410006-27	8	1
95-410006-29	8	1
95-410006-3	5 - 3	1
95-410006-31	8	1
95-410006-33	8	1
95-410006-43	5	1
95-410006-51	8	1
95-410006-601	8	1
95-410006-603	8	1
95-410006-610	8	1
95-410006-83	8	1
95-410006-85	8	1
95-410011	8 - 73	1

PART NUMBER	FIGURE & INDEX NO.	QTY. PER ART.
95-410011	17	1
¤95-410011-1	17	1
¤95-410011-3	17 - 3	1
¤95-410011-5	17 - 9	1
95-410029	8	1
¤95-410029-1	8	1
¤95-410029-19	3 - 47	1
95-410029-19	4 - 51	1
¤95-410029-19	4A- 48	1
95-410029-19	4	1
¤95-410029-25	8 - 33	1
95-410029-37	8	1
95-410029-41	8	1
95-410029-41	8A- 2	1
¤95-410029-45	8	1
¤95-410029-45	8A- 4	1
95-410029-5	8 - 18	1
95-410029-5	8 - 21	1
95-410029-51	8 -	1
95-410029-51	8A	1
95-410029-55	8	1
95-410029-55	8A	1
¤95-410029-602	8 - 14	1
¤95-410029-612	8	1
95-410029-613	8	1
95-410029-613	8A	1
95-410029-67	8 - 26C	2
95-410029-67	8A- 10	2
95-410029-69	8	1
95-410029-7	8	1
95-410029-71	8 - 25A	1
95-410029-81	8 - 26D	1
95-410029-81	8A- 8	1
¤95-410030-25	44 - 50	1
95-410030-37	5 - 1	1
95-410031-1	8 - 38	1
95-410031-1	45	1
95-410031-11	45 - 5	2
95-410031-12	45 - 6	2
95-410031-13	45 - 7	2
95-410031-14	45 - 8	2
95-410031-17	45 - 9	2
95-410031-19	45 - 1	1
95-410031-2	8 - 39	1
95-410031-2	45	1
95-410031-20	45 - 2	1
95-410031-7	45 - 11	2
95-410032-1	11 -	1
95-410032-3	11	1
¤95-410033-27	8 - 77	1
¤95-410033-28	8	1
95-410033-47	8	1
95-410033-48	8	1
¤95-410035 B-C	6 - 23	2
95-410037-1	11	1
95-410037-3	11	1
95-410040	17	1
95-410040-13	17A- 2	1
95-410040-17	17 - 10	1
¤95-410040-19	17 - 11	1
¤95-410040-19	17A- 18	1
¤95-410040-21	17 - 15	1
¤95-410040-21	17A- 22	1
¤95-410040-23	17A- 3	1
95-410040-27	17A- 12	1
95-410040-29	17A- 25	1
95-410040-30	17A- 11	1
¤95-410040-33	17A	1
¤95-410040-34	17A	1
95-410040-35	17A	1
95-410040-36	17A- 4	1
95-410040-37	17A	1
95-410040-38	17A- 5	1
95-410040-39	17A- 7	2
95-410040-41	17A- 6	2
95-410040-5	8	1
95-410040-9	17	1
95-41442	37E- 12	2
¤95-41589	37F- 13	2
¤95-41898	41C	1
¤95-41899	41C	1
95-420011	8	1
95-420011-1	5 - 5	1
95-420011-1	5	1
¤95-420011-107	4A- 77	1
95-420011-107	8 - 44	1
¤95-420011-113	3 - 27	1
95-420011-113	4 - 25	1
¤95-420011-113	4A- 25	1
95-420011-113	4	1
95-420011-115	5	1
95-420011-115	5	1
¤95-420011-141	3 - 25	1
95-420011-141	4	1
95-420011-143	3 - 4	1
95-420011-143	4 - 4	1
95-420011-143	4	1
95-420011-155	8 - 41	2
95-420011-157	8 - 42	2
95-420011-25	5 - 6	1
95-420011-25	5	1
95-420011-29	5	1
95-420011-29	5	1
95-420011-43	8	1
95-420011-45	3 - 31	1
95-420011-45	4 - 33	1
¤95-420011-45	4A- 32	1
95-420011-45	4	1
¤95-420011-55	3 - 19	1
95-420011-55	4 - 23	1
¤95-420011-55	4A- 23	1
95-420011-55	4	1
¤95-420011-57	3 - 26	1
95-420011-57	4 - 24	1
¤95-420011-57	4A- 24	1
95-420011-57	4	1
¤95-420011-65	3 - 3	1
95-420011-65	4 - 3	1
¤95-420011-65	4A- 3	1
95-420011-65	4	1

PART NUMBER	FIGURE & INDEX NO.	QTY. PER ART.
¤95-420011-67	3 - 21	1
95-420011-67	4	1
95-420011-79	3 - 33	1
95-420011-79	4 - 35	1
¤95-420011-79	4A- 34	1
95-420011-79	4	1
¤95-420011-83	3 - 20	1
95-420011-83	4	1
¤95-420011-85	3 - 48	1
95-420011-85	4 - 52	1
¤95-420011-85	4A- 51	1
95-420011-85	4	1
95-420012	10 -	1
95-420012	10	1
95-420012-11	10	1
95-420012-13	10	1
95-420012-3	10 - 96	1
95-420012-45	10	1
95-420012-601	10 -	1
95-420012-603	10	1
95-420012-614	10	1
95-420014-253	4A- 78	1
95-420015	8	1
¤95-420015-101	4A- 4	1
95-420015-103	8	1
95-420015-105	8	1
95-420015-115	4A- 5	1
95-420015-116	4A- 37	1
95-420015-145	13B- 26	4
95-420015-147	13B- 28	4
95-420015-149	13B- 27	4
95-420015-169	9	1
95-420015-185S	8	1
95-420015-187	8	1
95-420015-35	5 - 7	1
95-420015-41	4 - 26	1
95-420015-53	4 - 27	1
¤95-420015-53	4A- 26	2
95-420015-55	4 - 28	1
¤95-420015-55	4A- 27	1
95-420015-59	4 - 54	1
95-420015-59	4A	1
95-420015-61	4 - 53	1
¤95-420015-61	4A- 52	1
95-420015-61	4A	1
95-420015-63	8	1
95-420015-65	8	1
95-420015-67	11	1
¤95-420015-68	11	1
95-420015-87	8	1
95-420015-89	8 - 46	1
95-420015-89	9	1
95-420015-9	13C	4
95-420016-23	13B- 25	2
¤95-420016-23	13C	2
95-420017-17	13D- 62	2
95-420017-17	13E- 42	2
95-420017-19	13D- 63	2
95-420017-19	13E	2
95-420017-5	13C	2
95-420017-5	13D- 61	2
95-420017-5	13E- 41	2
95-420017-7	13C	2
95-420017-9	13C	2
95-430005	8	1
95-430005-27	5	1
95-430005-27	5	1
95-430005-39	5 - 10	1
95-430005-39	5	1
95-430005-49	3 - 54	1
95-430005-49	4	1
95-430005-50	3 - 55	1
95-430005-50	4	1
¤95-430005-51	3 - 52	1
95-430005-51	4	1
95-430005-52	3 - 53	1
95-430005-52	4	1
95-430005-53	3 - 9	1
95-430005-53	4	1
¤95-430005-54	3 - 37	1
95-430005-54	4	1
95-430005-55	3 - 22	1
95-430005-55	4	1
95-430005-57	3 - 8	1
95-430005-57	4	1
95-430005-58	3 - 36	1
95-430005-58	4	1
95-430005-61	3 - 23	1
95-430005-61	4	1
95-430005-81	3 - 51	1
95-430005-81	4	1
95-43686	37C- 14	12
95-440005	8	1
95-440005-11	3 - 11	1
95-440005-11	4	1
95-440005-12	3 - 38	1
95-440005-12	4	1
95-440005-129	4A- 75	1
95-440005-13	5 -	1
95-440005-13	5	1
95-440005-23	5	1
95-440005-23	5	1
95-440005-37	5	1
95-440005-37	5	1
95-440005-5	3 - 10	1
95-440005-5	4	1
95-440005-616	5	1
95-440005-620	5	1
95-440005-87	5	1
95-440005-9	4A- 74	1
¤95-440005-9	8 - 62	2
95-440005-95	8	1
95-440005-96	8	1
95-440006	8	1
95-440006-101	5 - 9	1
95-440006-107	5 - 8A	1
95-440006-109	5	1
95-440006-129	8	1
95-440006-151	5 - 11	1
95-440006-171	5 - 8	1

PART NUMBER	FIGURE & INDEX NO.	QTY. PER ART.
95-440006-173	5	1
95-440006-177	5	1
95-440006-183	5	1
95-440006-185	8	1
95-440006-201	4A- 7	1
95-440006-202	4A- 39	1
95-440006-213	5	1
95-440006-33	4A- 76	1
95-440006-612	5 - 12	1
95-440006-63	4 - 5	1
95-440006-63	4A	1
95-440006-64	4 - 39	1
95-440006-64	4A	1
95-440006-65	4 - 6	1
95-440006-65	4A- 8	1
95-440006-65	4A	1
95-440006-66	4 - 41	1
95-440006-66	4A- 40	1
95-440006-66	4A	1
95-440006-67	4 - 7	1
95-440006-67	4A- 6	1
95-440006-67	4A	1
95-440006-68	4 - 40	1
95-440006-68	4A- 38	1
95-440006-68	4A	1
95-440006-69	4 - 29	1
95-440006-69	4A- 28	1
95-440006-69	4A	1
95-440006-71	4 - 30	1
95-440006-71	4A- 29	1
95-440006-71	4A	1
95-440006-81	5 - 14	1
95-440011	8 - 74	1
95-440011-1	3 - 39	1
95-440011-1	4	1
95-440013-3	4 - 55	1
95-440013-3	4A	1
95-440013-4	4 - 56	1
95-440013-4	4A	1
95-440013-5	4 - 57	1
95-440013-5	4A	1
95-440013-53	26 - 12	1
95-440013-6	4 - 58	1
95-440013-6	4A	1
95-440013-603	5 - 15	1
95-440013-604	5 - 13	1
95-440013-81	26 - 13	1
95-440014	8	1
95-440014	16A-	1
95-440014-1	16A- 1	1
95-440014-21	16A	1
95-440015	8	1
95-440015	8	1
95-440015-11	4 - 9	1
95-440015-11	4A- 10	1
95-440015-11	4A	1
95-440015-12	4 - 42	1
95-440015-12	4A	1
95-440015-13	4 - 19	1
¤95-440015-13	4A- 15	1
95-440015-14	4 - 43	1
¤95-440015-14	4A- 42	1
95-440015-15	4A- 9	1
¤95-440015-17	4A	1
¤95-440015-17	4A- 41	1
95-440015-3	4 - 8	1
95-440015-3	4A	1
95-440015-5	4 - 20	1
95-440015-5	4 - 44	1
¤95-440015-5	4A- 16	1
¤95-440015-5	4A- 43	1
95-4486	37D- 11	2
95-4486	37E	2
95-4547	41B- 3	2
95-4719	37H- 11	8
95-5039	36A- 66	2
95-5154	41B- 1	2
95-520011	28	1
95-520011-601	28	1
95-520012	23	1
95-5204	37D- 12	2
95-5204	37E	2
¤95-5204	37F- 10	2
95-521000-1	31	1
95-521000-2	31	1
95-521000-33	31	1
95-521000-35	31 - 75	2
95-521000-37	31	2
95-521000-39	31	1
95-521000-601	31	1
95-521000-602	31	1
95-524000	31	1
95-524000	32	REF
95-524000	33	REF
95-524000-11	31 - 36	1
95-524000-13	32 - 11	1
95-524000-15	32	1
95-524000-17	32	1
95-524000-19	32 - 4	1
95-524000-21	31 - 11	2
95-524000-25	32 - 10	2
95-524000-27	32	1
95-524000-31	31 - 30	1
95-524000-33	31 - 31	1
95-524000-35	31	1
95-524000-37	31	1
95-524000-43	31 - 10A	1
95-524000-45	32	1
95-524000-7	31	1
95-524000-9	31	1
95-524001	32	1
95-524001	33	1
95-524001-1	33 - 18	1
95-524001-13	33 - 27	1
95-524001-15	33	1
95-524001-9	33 - 26	1
95-524011	34	1
95-524011-1	34 - 9	1
95-524011-3	34	1
95-524011-5	34	1

PART NUMBER	FIGURE & INDEX NO.	QTY. PER ART.
95-524012	28 - 26	1
95-524013	28 - 20	1
95-524014	28 - 19	1
95-524017	32	1
95-524017	34	1
95-524017-12	34	1
95-524017-18	34 - 27	1
95-524017-22	34 - 15	1
95-524017-25	34 - 18	1
95-524017-26	34 - 19	1
95-524017-8	34 - 11	2
95-524018	31	1
95-524018	35	1
95-524019	34 - 21	1
95-524019	34 - 31	2
95-524020	33	1
95-524020-1	33 - 24	1
95-524022-1	28 - 9	1
95-524023-5	58 - 80	1
95-524023-5	58A-111	1
95-524025	58	1
95-524025	58A	1
95-524025-1	58A	1
95-524025-3	58A-113	1
95-524025-7	58 - 78	1
95-524025-7	58A-109	1
95-524029	58	1
95-524029	58A	1
95-524030	58 - 93	1
95-524031	58	1
95-524031	58A-	1
95-524032	58 - 58	1
95-524032	58A- 68	1
95-524035	34 - 6	1
95-524038	32	1
95-524038	34	1
95-524038-11	34 - 38	1
95-524038-12	34	1
95-524038-17	34	1
95-524038-19	34	1
95-524039	34	1
95-524039-1	34	1
95-526010	28	1
95-526010-10	28 - 14	1
95-526010-14	28 - 29	1
95-526010-20	28 - 28	1
95-526010-8	28	1
95-526011	28	1
95-526011-1	28 - 11	1
95-526011-3	28 - 12	1
95-530000-1	14	1
95-530000-11	14 - 53	1
95-530000-13	14 - 54	1
95-530000-17	14 - 58	1
95-530000-19	14	1
95-530000-21	14A-100	1
95-530000-21	14B- 91	1
95-530000-21	14C- 84	1
95-530000-23	14A-101	1
95-530000-23	14B- 90	1
95-530000-23	14C- 85	1
95-530000-25	14 - 3	1
95-530000-25	14 - 51	1
95-530000-27	14A- 19	1
95-530000-3	14	1
95-530000-33	14A-113	1
95-530000-33	14B- 89	1
95-530000-33	14C- 86	1
95-530000-35	14	1
95-530000-41	14	1
95-530000-41	14A- 13	1
95-530000-43	14	1
95-530000-45	14	1
95-530000-5	14 - 7	1
95-530000-5	14A- 75	1
95-530000-7	14 - 30	1
95-530000-7	14A- 78	1
95-530000-9	14 - 41	1
95-530001-1	14	1
95-530001-13	14	1
95-530001-15	14	1
95-530001-17	14	1
95-530001-21	14	1
95-530001-21	14A- 48	1
95-530001-3	14	1
95-530001-5	14	1
95-530001-7	14	1
95-530001-9	14	1
95-530002-1	14A	1
95-530002-101	14A- 22	1
95-530002-103	14A- 53	1
95-530002-105	14A- 54	1
95-530002-11	14A	1
95-530002-111	14A	1
95-530002-113	14A	1
95-530002-113	14B- 50	1
95-530002-113	14C- 3	1
95-530002-115	14A- 73	2
95-530002-117	14A	2
95-530002-13	14A	1
95-530002-15	14A- 1	1
95-530002-21	14A-	1
95-530002-23	14A- 30	1
95-530002-25	14A	1
95-530002-27	14A- 26	1
95-530002-29	14A- 27	1
95-530002-3	14A	1
95-530002-31	14A	1
95-530002-33	14A- 52	1
95-530002-33	14A	1
95-530002-35	14A	4
95-530002-37	14A- 72	4
95-530002-39	14A	2
95-530002-41	14A- 74	2
95-530002-43	14C- 2	1
95-530002-47	14A- 59	1
95-530002-49	14A- 58	1
95-530002-5	14A	1
95-530002-51	14A	1
95-530002-53	14A- 64	1

PART NUMBER	FIGURE & INDEX NO.	QTY. PER ART.
95-530002-53	14B- 94	1
95-530002-53	14C- 55	1
95-530002-53	14D- 11	1
95-530002-55	14A- 61	1
95-530002-57	14A	1
95-530002-59	14A- 57	1
95-530002-61	14A	1
95-530002-63	14A- 56	1
95-530002-65	14A	1
95-530002-67	14A	1
95-530002-7	14A	1
95-530002-71	14A	1
95-530002-73	14A	1
95-530002-73	14B- 93	1
95-530002-73	14C- 81	1
95-530002-75	14A- 96	1
95-530002-77	14A	1
95-530002-79	14A	1
95-530002-81	14B- 77	1
95-530002-89	14A- 28	1
95-530002-9	14A- 20	1
95-530002-91	14A	1
95-530002-93	14A	3
95-530002-93	14B- 75	3
¤95-530002-93	14C- 89	1
95-530002-95	14A	3
95-530002-95	14B- 76	3
95-530002-95	14C- 90	1
95-530002-97	14A- 55	1
95-530002-99	14A	1
95-530003	14B	1
95-530003-1	14B	1
95-530003-101	14B	1
95-530003-103	14B	1
95-530003-105	14B	1
95-530003-107	14B	1
95-530003-11	14B- 52	1
95-530003-115	14B- 71	1
95-530003-13	14B- 7	1
95-530003-131	14B- 74	1
95-530003-133	14B- 73	1
95-530003-15	14B- 24	1
95-530003-17	14B- 12	1
95-530003-19	14B- 22	1
95-530003-23	14B- 28	1
95-530003-27	14B- 43	1
95-530003-29	14B- 41	1
95-530003-3	14B-109	4
95-530003-31	14B- 1	1
95-530003-33	14B- 2	1
95-530003-39	14B- 53	1
95-530003-43	14B- 56	1
95-530003-47	14B- 47	2
95-530003-5	14B-108	2
95-530003-51	14B- 39	1
95-530003-63	14B- 20	1
95-530003-67	14B- 14	1
95-530003-69	14B- 10	1
95-530003-7	14B- 59	1
95-530003-7	14B	2
95-530003-73	14B-105	1
95-530003-9	14B- 49	1
95-530003-93	14B- 68	1
95-530003-99	14B- 67	1
95-530004-1	14C-	1
95-530004-17	14C- 1	1
95-530004-25	14C	1
95-530004-3	14C	1
95-530004-37	14C-100	1
95-530004-39	14D- 91	1
95-530004-45	14C	1
95-530004-47	14C	1
95-530004-49	14D- 19	1
95-530004-5	14C- 59	1
95-530005	14D- 44	1
95-530005-1	14D	1
95-530005-13	14D- 64	1
95-530005-17	14D- 60	1
95-530005-19	14D- 24	1
95-530005-23	14D- 27	1
95-530005-25	14D- 51	1
95-530005-29	14D- 23	1
95-530005-3	14D	1
95-530005-5	14D	1
95-530005-53	14D- 58	1
95-530005-67	14D- 85	1
95-530005-7	14D	1
95-530005-9	14D- 62	1
95-530011	14	3
95-530011-21	14 - 2A	1
95-530011-23	14 - 2B	1
95-530011-25	14A	1
95-530011-27	14A-108	1
95-530011-29	14A-111	1
95-530011-3	14A-109	1
95-530011-31	14A-112	1
95-530011-7	14A-110	1
95-530011-9	14 - 1	1
95-530012	14	1
95-530012-1	14 - 2C	1
95-530012-3	14 - 2H	1
95-530012-5	14 - 2E	1
95-530013-1	14B- 54	1
95-530013-11	14B- 38	1
95-530013-3	14B- 44	1
95-530013-5	14B- 13	1
95-530013-7	14B- 19	1
95-530013-9	14B- 29	1
95-530014-1	14B	1
95-530014-13	14B	1
95-530014-3	14B- 81	1
95-530014-5	14B- 82	1
95-530014-7	14B- 83	1
95-530014-9	14B- 84	1
95-530016	14B- 70	1
95-534010	14	1
95-534010	14A	1
95-534010	14B	1
95-534010-1	14 - 22	1
95-534010-1	14A- 83	1

PART NUMBER	FIGURE & INDEX NO.	QTY. PER ART.
95-534010-1	14B- 85	1
95-534010-2	14 - 23	1
95-534010-2	14A- 85	1
95-534010-2	14B- 87	1
95-534010-3	14 - 25	1
95-534010-3	14A- 84	1
95-534010-3	14B- 86	1
95-534010-5	14	1
95-534010-5	14A	1
95-534010-5	14B	1
95-534014	12A	1
95-534014-27	12A- 15	4
95-534014-35	12A- 27	1
95-534014-37	12A- 29	1
95-534014-39	12A- 33	1
95-534014-5	12A- 18	1
95-534014-53	12A	1
95-534014-53	13A	2
95-534014-55	12A- 31	1
95-534014-59	9 - 13	1
95-534014-59	12A	1
95-534014-61	12A- 38	1
95-534014-7	12A- 16	1
95-534014-75	12A	1
95-534014-75	13A- 44	1
95-534015	12A-	1
95-534015-1	12A- 2	1
95-534015-15	12A- 8	1
95-534015-17	12A- 10	2
95-534015-19	12A- 5	1
95-534015-21	12A- 7	1
95-534015-23	12A- 4	1
95-534015-25	12A- 3	1
95-534015-27	12A- 6	1
95-534016	12A	1
95-534016	13A	1
95-534016-1	12A	1
95-534016-1	13A	1
95-534016-19	13A- 35	1
95-534016-20	13A	1
95-534016-21	13A- 34	1
95-534016-22	13A	1
95-534016-23	13A- 31	1
95-534016-24	13A	1
95-534016-29	13A- 32	2
95-534017-1	12C	1
95-534017-2	12C	1
95-534017-27	12C- 5	4
95-534017-27	13B- 6	4
95-534017-27	13C- 4	8
95-534017-29	12C	2
95-534017-29	13C- 5A	2
95-534017-3	12C- 7	2
95-534017-35	12B- 7	1
95-534017-35	12C- 23	2
95-534017-35	13B- 24	2
95-534017-37	12C	1
95-534017-38	12C	1
95-534017-41	12C	1
95-534017-41	13C	1
95-534017-42	12C	1
95-534017-42	13C	1
95-534017-45	12C- 16	2
95-534017-47	12C	2
95-534017-49	12C	2
95-534017-5	12C- 10	2
¤95-534017-5	13C- 12	2
95-534017-63	13C- 13	4
¤95-534017-65	13C- 6	1
¤95-534017-66	13C	1
95-534017-9	13C	2
95-534018-39	13B- 9	2
95-534018-39	13C- 22	4
95-534018-43	13B- 11	2
95-534018-43	13C- 20	4
95-534018-47	13B- 13	2
95-534018-47	13C- 17	4
95-534018-57	13B- 16	2
95-534018-57	13C- 16	2
95-534018-63	13B	2
95-534018-63	13C- 26	2
95-534018-65	12C- 6	2
95-534018-65	13B- 8	2
95-534018-69	12C- 1	2
95-534018-69	13B- 1	2
95-534018-73	13B	2
95-534018-74	13B- 7	2
95-534018-87	13B- 18	2
95-534018-91	13B	2
¤95-534018-91	13C- 23	2
95-534018-93	13B	1
95-534018-94	13B	1
95-534018-95	13B	1
95-534018-96	13B	1
95-534019	12C- 3	4
95-534019	13B- 4	4
¤95-534019	13C- 3	8
95-534020	14A	1
95-534020-1	14A- 66	1
95-534022-21	12B- 4	1
95-534022-45	12B- 18	1
95-534022-47	12B- 20	1
95-534022-59	12B	4
95-534022-603	12B	1
95-534022-605	12B	1
95-534022-615	12B- 5	1
95-534022-616	12B-	1
95-534022-617	12B-	1
95-534022-618	12B	1
95-534022-619	12B	1
95-534022-623	12B- 17	1
95-534022-65	12B- 15	4
95-534022-667	12B	1
95-534022-668	12B	1
95-534022-69	12B- 11	1
95-534022-73	12B	1
95-534022-91	12B- 2	2
95-534022-95	12B	1
95-534023	12C	1
95-534023	13B	1

PART NUMBER	FIGURE & INDEX NO.	QTY. PER ART.
¤95-534023	13C- 8	1
¤95-534023	13C	1
95-534023-1	12C- 9	1
95-534023-1	13B- 19	1
¤95-534023-1	13C	1
¤95-534023-1	13C- 25	1
¤95-534026	6	1
95-534026	14A- 23	1
95-534027	14A	1
95-534027-3	14A-122	1
95-534028-1	14A- 68	1
95-534028-1	14B-111	1
95-534028-11	14A-	1
95-534028-11	14B	1
95-534028-7	14A- 69	4
95-534028-7	14B-112	1
95-534028-8	14A- 70	4
95-534028-8	14B	1
95-534028-9	14A- 67	1
95-534028-9	14B-110	1
95-534030-15	12B- 23	1
95-534030-16	12B	1
95-534030-3	12B	1
95-534030-3	14B-113	2
95-534030-4	12B	1
95-534030-4	14B	2
95-534033	58 - 1	1
95-534037	14D-106	2
95-534040	14C- 13	1
95-534040	14D- 86	1
95-534041-1	13C-	1
95-534041-11	13C- 39	4
95-534041-13	13C	1
95-534041-14	13C	1
95-534041-15	13C	1
95-534041-16	13C	1
95-534041-17	13C	1
95-534041-18	13C	1
95-534041-19	13C	1
95-534041-2	13C	1
95-534041-20	13C	1
95-534041-21	13C- 1	2
95-534041-23	13C- 30	4
95-534041-25	13C- 31	4
95-534041-27	13C- 32	4
95-534041-29	12B	1
95-534041-3	13C	1
95-534041-4	13C	1
95-5383	37D- 16	10
95-550000	48	1
95-550000-15	48 - 47	1
95-550000-15	48A- 47	1
95-550000-17	48 - 41	1
¤95-550000-17	48A- 41	1
95-550000-19	48 - 59	1
95-550000-21	48 - 92	1
95-550000-21	48A- 99	1
95-550000-23	48 - 64	1
95-550000-23	48A- 66	1
95-550000-31	48 - 99	1
95-550000-33	48 - 94	1
95-550000-33	48A-101	1
95-550000-35	48 - 31	1
95-550000-35	48A- 31	1
95-550000-39	48 - 46	1
¤95-550000-39	48A- 46	1
95-550000-41	48 - 44	1
¤95-550000-41	48A- 44	1
95-550000-43	48	1
95-550000-43	48A- 60	1
95-550000-45	48	1
95-550000-45	48A- 64	1
95-550000-49	48 - 90	1
¤95-550000-49	48A- 97	1
95-550000-55	48 - 87	1
95-550000-55	48A- 94	1
95-550000-9	48 - 84	1
¤95-550000-9	48A- 91	1
¤95-550000-9	48A-110	1
95-550001-1	48A	1
95-550001-13	48A- 78	1
¤95-550001-15	48A	1
95-550001-17	48A- 81A	1
95-550001-3	48A-	1
¤95-550001-31	48A-112	1
¤95-550001-33	48A-109	1
¤95-550001-35	48A-111	1
95-550001-37	48A-115	1
95-550001-7	48A- 70	1
95-550002-13	48A	1
95-550002-15	48A	1
¤95-550002-17	48A-116	1
95-550002-195	48A	1
95-550002-197	48A	1
95-550002-213	48A-107	1
95-550002-217	48A-106	1
95-550002-221	48A	1
95-550002-223	48A	1
95-550002-33	48A-116A	1
95-550002-9	48A	1
95-550015-17	47D- 48	1
95-550015-23	47D-	1
¤95-550015-3	48A-121	1
95-554011	48 - 50	1
95-554012-1	48 - 51	1
95-554014	48	1
95-554014	48A	1
95-554014-11	48 - 34	2
¤95-554014-11	48A- 34	2
95-554014-13	48	1
¤95-554014-13	48A	1
95-554014-15	48 - 36	1
¤95-554014-15	48A- 36	1
95-554014-7	48 - 32	1
¤95-554014-7	48A- 32	1
95-554014-9	48 - 33	1
¤95-554014-9	48A- 33	1
95-554015	48 - 35	1
¤95-554015	48A- 35	1
95-554016	48 - 95	2

PART NUMBER	FIGURE & INDEX NO.	QTY. PER ART.
95-554016	48A-102	2
95-554017	48	1
95-554017	48A	1
95-554017-11	48	1
95-554017-11	61	1
95-554017-19	61	1
95-554017-23	48 - 78	1
95-554017-23	48A- 85	1
95-554017-3	48 - 77	1
95-554017-3	48A- 84	1
95-554017-35	48 - 80	1
¤95-554017-35	48A- 86	1
95-554017-35	61	1
95-554017-35	61A	1
¤95-554017-35	61B	1
95-554017-37	48	1
¤95-554017-37	48A	1
95-554017-37	61	1
95-554017-37	61A	1
¤95-554017-37	61B	1
95-554019-1	48	1
95-554019-3	48 - 67	1
95-554020	48 - 74	1
95-554021	48 - 11	1
¤95-554021	48A- 11	1
95-554021-3	48	1
¤95-554021-3	48A	1
95-554022	48 - 7	1
¤95-554022	48A- 7	1
¤95-554022	48A-120	1
95-554024	48	1
95-554024	48A	1
95-554025	48	1
95-554025	48A	1
95-554025-1	48 - 21	1
¤95-554025-1	48A- 21	1
95-554025-3	48 - 22	1
¤95-554025-3	48A- 22	1
95-554026	48 - 23	1
¤95-554026	48A- 23	1
95-554028	48	1
¤95-554028	48A	1
95-554028-5	48 - 40	1
95-554028-5	48A- 40	1
95-554028-7	48 - 39	1
95-554028-7	48A- 39	1
95-554031	48 - 68	1
95-554032	48 - 70	1
95-554035	15	1
¤95-554036-69	47C- 24	1
95-554036-75	47C	1
95-554036-77	47C- 23	1
95-554037-1	48A- 51	1
¤95-554038-9	48A- 50	1
95-554039	48A- 68	1
¤95-554039-3	48A-105	1
95-554040	48A-104	1
¤95-554041	48A- 69	1
95-560000-19	64 - 37	1
95-560000-21	64 - 43	1
95-560000-23	64 - 45	1
95-560000-3	64 - 1	1
95-560000-5	64 - 2	1
95-560000-57	64 -	1
95-560000-59	64	1
95-560000-61	64 - 10	1
95-560000-63	64 - 35	1
95-560000-65	64 - 6	1
95-570000-1	7	1
95-5761	37H- 14	4
95-590000	7 -	1
95-590001	7	1
¤95-590001-1	7	1
95-590001-5	7	1
95-590002	7	1
95-590002-1	7	1
¤95-590002-3	7	1
¤95-590011	7	1
95-590014	7	1
¤95-590014-1	7	1
¤95-590014-31	7	1
¤95-590014-33	7	1
¤95-590014-35	7	1
¤95-590014-37	7	1
¤95-590014-39	7	1
¤95-590014-41	7	1
¤95-590014-5	7	1
¤95-590014-51	7	1
¤95-590014-53	7	1
¤95-590014-55	7	1
¤95-590014-59	7	1
¤95-590014-61	7	1
¤95-590014-63	7	1
95-590015-1	7 - 6	2
¤95-590016-1	7 - 12	1
¤95-590018	7	1
¤95-590020-15	7	1
¤95-590026	7	1
¤95-590031	7 - 2	1
¤95-590033-1	7 - 9	1
¤95-590034	7 - 3	1
95-600000	26	1
95-600000-3	26 - 5	1
95-600000-4	26	1
95-600001	26	1
95-600001-3	26	1
95-600001-4	26	1
95-610005-1	26 - 3	1
95-610005-2	26	1
¤95-610005-3	29 - 3	1
¤95-610005-4	29	1
¤95-610005-601	29 -	1
¤95-610005-602	29	1
95-610006-1	26	1
95-610006-11	29	2
95-610006-13	4 - 65	2
95-610006-13	4A- 66	2
95-610006-13	4A	1
95-610006-2	26	1
95-610006-27	29	2

PART NUMBER	FIGURE & INDEX NO.	QTY. PER ART.
95-610006-43	29	2
95-610006-45	29	2
¤95-610006-601	29	1
¤95-610006-602	29	1
95-610006-661	29	1
95-610006-662	29	1
95-610011	26	1
95-610011-1	26 - 7	1
95-610012-1	26	1
95-610012-5	26	1
95-620010-1	26 - 1	1
95-620010-1	27	REF
¤95-620010-19	3 - 63	2
95-620010-19	4 - 71	2
¤95-620010-19	4A- 65	2
¤95-620010-19	4A- 71	2
95-620010-19	4	2
95-620010-2	26	1
95-620010-2	27	REF
95-620010-21	3 - 64	1
95-620010-21	4 - 72	1
95-620010-21	4	1
95-620010-22	3 - 65	1
95-620010-22	4 - 73	1
95-620010-22	4	1
95-620010-47	3 - 59	1
95-620010-47	4	1
95-620010-48	3 - 60	1
95-620010-48	4	1
95-620010-49	3 - 61	1
95-620010-49	4	1
95-620010-50	3 - 62	1
95-620010-50	4	1
95-620010-51	3 - 57	1
95-620010-51	4	1
95-620010-52	3 - 58	1
95-620010-52	4	1
95-620010-60	27 - 9	4
95-620010-601	27 -	1
95-620010-602	27	1
95-620010-62	27	2
95-620010-621	27	1
95-620010-622	27	1
95-620010-63	26	1
95-620010-63	27	REF
95-620010-64	26	1
95-620010-64	27	REF
95-620010-65	4 - 61	1
95-620010-65	4A- 57	1
95-620010-65	4A	1
95-620010-66	4 - 62	1
95-620010-66	4A- 58	1
95-620010-66	4A	1
95-620010-67	4 - 63	1
95-620010-67	4A- 59	1
95-620010-67	4A	1
95-620010-68	4 - 64	1
95-620010-68	4A- 60	1
95-620010-68	4A	1
95-620010-69	4 - 59	1
95-620010-69	4A- 55	1
95-620010-69	4A	1
95-620010-70	4 - 60	1
95-620010-70	4A- 56	1
95-620010-70	4A	1
95-620010-79	4A- 53	1
95-620010-79	4A	1
95-620010-80	4A- 54	1
95-620010-80	4A	1
95-620010-81	4A- 61	1
95-620010-81	4A	1
95-620010-82	4A- 62	1
95-620010-82	4A	1
¤95-620010-83	4A- 63	1
95-620010-83	4A	1
95-620010-84	4A- 64	1
95-620010-84	4A	1
95-630005	26 - 4	1
95-630005-1	30 - 14	1
95-630005-178	30	1
95-630005-3	3 - 17	1
95-630005-3	4 - 18	1
95-630005-3	4A- 18	1
95-630005-3	4	1
95-630005-4	3 - 44	1
95-630005-4	4 - 48	1
95-630005-4	4A- 47	1
95-630005-4	4	1
95-630005-601	30 -	1
95-630005-602	30	1
95-630005-7	30 - 6	1
95-640005	26 - 2	1
95-640005	28	REF
95-640005-11	3 - 12	1
95-640005-11	4	1
95-640005-15	3 - 13	1
95-640005-15	4 - 15	1
95-640005-15	4A- 13	1
95-640005-15	4	1
95-640005-16	3 - 40	1
95-640005-16	4 - 45	1
95-640005-16	4A- 44	1
95-640005-16	4	1
95-640005-27	3 - 14	1
95-640005-27	4 - 16	1
95-640005-27	4A- 14	1
95-640005-27	4	1
95-640005-30	3 - 41	1
95-640005-30	4 - 46	1
95-640005-30	4A- 45	1
95-640005-30	4	1
95-640005-47	28 - 5	1
95-640005-601	28 -	1
95-640006	26	1
95-640006	28	REF
95-640006-1	4 - 10	1
95-640006-1	4A- 11	1
95-640006-1	4A	1
95-640006-13	28 - 40	1
95-640006-40	4 - 11	1

PART NUMBER	FIGURE & INDEX NO.	QTY. PER ART.
95-640006-40	4A- 12	1
95-640006-40	4A	1
95-640006-601	28	1
¤95-6867	37C- 3	8
¤95-6867	37H- 1	8
¤95-6867	41C- 2	3
95-6891	41B- 12	1
95-6926	37C- 6	8
95-6974	37C- 4	8
95-7649	37C- 13	24
95-803S	49	2
95-803S	49	2
¤95-8072	37F- 2	4
95-810000-1	36	1
95-810000-1	36	1
95-810000-2	36	1
95-810000-2	36	1
95-810000-602	36 -	1
95-810000-603	36	1
95-810000-612	36	1
95-810000-613	36	1
95-810001-1	36	1
95-810001-2	36	1
95-810002-1	37 -	1
¤95-810002-13	37	2
95-810002-15	37	1
95-810002-16	37	1
95-810002-19	37	1
95-810002-2	37	1
95-810002-20	37	1
95-810002-21	37	2
95-810002-23	37	1
95-810002-24	37	1
95-810002-27	37	2
¤95-810002-3	37 - 56	1
95-810002-31	37	1
95-810002-32	37	1
95-810002-33	37	2
95-810002-37	37	1
95-810002-38	37	1
95-810002-39	37	2
¤95-810002-4	37	1
95-810002-5	37	1
95-810002-6	37	1
95-810002-601	37	1
95-810002-602	37	1
95-810002-605	37	1
95-810002-606	37	1
95-810002-615	37	1
95-810002-616	37	1
95-810002-617	37	1
95-810002-618	37	1
95-810002-751	37	1
95-810002-752	37	1
95-810002-753	37	1
95-810002-754	37	1
95-810002-9	37	2
95-810005	38	1
95-810010-1	36	1
95-810010-2	36	1
95-810010-3	36	2
95-810010-5	36 - 8	2
95-810010-7	36	1
95-810010-7	36A- 12	1
95-810010-8	36 - 13	1
95-810010-8	36A	1
95-810011-1	36	1
95-810011-2	36 - 6	1
95-810012	36	2
95-810013	36	2
95-810013-1	36 - 14	2
95-810014	36 - 15	2
95-810016-1	36	1
95-810016-3	36 - 48	1
¤95-810017	38 - 1	1
95-810017	39 -	REF
95-810017-7	38	1
95-810017-7	39	REF
95-810019	46	1
95-810019-1	46	1
95-810019-11	46 - 41	1
95-810019-13	46 - 47	1
95-810019-15	46 - 52	1
95-810019-17	46 - 51	1
95-810019-19	46 - 44	1
95-810019-21	46 - 64	1
95-810019-23	46 - 65	1
95-810019-25	46 - 66	1
95-810019-3	46	1
95-810019-35	46	1
95-810019-37	46	1
95-810019-39	46	1
95-810019-5	46	1
95-810019-7	46 - 46	1
95-810019-9	46 - 42	1
95-814005	46	1
95-814005-13	46	1
95-814005-21	46	1
95-814005-23	46	1
95-814005-25	46 - 9	1
95-814005-27	46	1
95-814005-29	46 - 28	1
95-814005-3	46 - 8	1
95-814005-31	46	1
95-814005-33	46 - 29	1
95-814005-37	46	1
95-814005-38	46	1
95-814005-5	46 - 22	1
95-814005-9	46 - 27	1
95-820000	41	1
95-820000-1	41	1
95-820000-3	41	1
¤95-820000-3	41A- 5	1
95-820006	42	1
95-820006-1	42 -	1
95-824005	41 -	1
95-824005-1	41 - 4	1
¤95-824005-1	41A- 44	1
95-824005-3	41	1
¤95-824005-3	41A	1

PART NUMBER	FIGURE & INDEX NO.	QTY. PER ART.
¤95-824005-601	41A	1
95-824011	41 - 13	1
95-824014	41	1
95-824014-602	41	1
95-824016	41	1
95-824016-1	41	1
95-824016-3	41 - 11	1
95-824017	41 - 66	1
95-824018	42	1
95-824019	42 - 32	1
95-824020	42	1
95-824020-3	42 - 18	1
95-8249	37C- 5	8
¤95-825195-27	41A- 59	1
95-910001-103	49	1
95-910001-107	49 - 97	2
95-910001-107	49C- 24	2
¤95-910001-109	49	1
95-910001-117	49C- 81	1
95-910001-118	49C	1
¤95-910001-139	49	1
95-910001-141	49 - 98	2
95-910001-141	49C- 29	2
95-910001-147	49C- 65	1
95-910001-149	49C- 66	1
¤95-910001-15	49 - 2	1
95-910001-151	49C- 68	1
95-910001-153	49 - 54	1
95-910001-153	49A- 14	1
95-910001-154	49	1
95-910001-154	49A	1
¤95-910001-155	49 - 16	1
¤95-910001-155	49C- 80	1
¤95-910001-156	49	1
¤95-910001-156	49C	1
¤95-910001-157	49 - 18	2
¤95-910001-157	49C- 79	2
¤95-910001-158	49	2
¤95-910001-158	49C	2
¤95-910001-159	49 - 7	6
¤95-910001-161	49	2
95-910001-163	49 - 68	2
¤95-910001-165	49	1
¤95-910001-167	49	1
¤95-910001-169	49	1
¤95-910001-169	49C- 71	1
¤95-910001-171	49	1
¤95-910001-171	49C	1
95-910001-173	49 - 58	1
95-910001-175	49	1
¤95-910001-177	49 - 25	1
95-910001-179	49	1
¤95-910001-187	49 - 20	1
¤95-910001-189	49	1
¤95-910001-191	49 - 91	2
¤95-910001-191	49C- 23	2
95-910001-195	49 - 50B	4
95-910001-195	49A- 15	4
95-910001-195	49C- 69	1
95-910001-197	49	1
95-910001-197	49A-	1
95-910001-198	49	1
95-910001-198	49A	1
95-910001-200	49	1
95-910001-200	49A	1
¤95-910001-201	49A- 1	1
¤95-910001-203	49A	1
¤95-910001-205	49A- 2	1
¤95-910001-207	49A	1
¤95-910001-209	49A	1
¤95-910001-209	49C- 73	1
¤95-910001-211	49A	1
¤95-910001-211	49C	1
¤95-910001-213	49A	1
¤95-910001-213	49C- 74	1
¤95-910001-215	49A	1
¤95-910001-215	49C	1
¤95-910001-233	49A- 7	1
¤95-910001-233	49C- 58	1
¤95-910001-235	49A	1
¤95-910001-235	49C	1
95-910001-237	49C	1
95-910001-239	49C- 50A	1
95-910001-244	49C- 54	1
¤95-910001-25	49 -108	8
¤95-910001-35	49 - 8	1
¤95-910001-35	49C- 72	1
¤95-910001-41	49 - 61	2
¤95-910001-45	49	1
¤95-910001-5	49 - 1	1
¤95-910001-59	49	1
¤95-910001-59	49C	1
¤95-910001-67	49 - 70	2
95-910001-69	49 - 64	2
95-910001-69	49A- 8	2
95-910001-69	49C- 61	2
95-910001-77	49	1
95-910001-80	49	1
95-910001-95	49	8
95-910001-99	49 - 71	2
95-910002-1	49C-	1
95-910002-101	49C	1
95-910002-102	49C	1
95-910002-103	49C	1
95-910002-104	49C	1
95-910002-105	49C- 56A	2
95-910002-107	49C- 52B	2
95-910002-109	49C- 52A	2
95-910002-11	49C- 37	4
95-910002-13	49C- 35	2
95-910002-2	49C	1
95-910002-4	49C	1
95-910002-5	49C	1
95-910002-6	49C	1
95-910002-8	49C	1
95-910002-9	49C- 36	2
95-910002-95	49C- 2	8
¤95-910005	49 - 38	2
¤95-910005	49C- 38	2
95-910011-101	51	1

PART NUMBER	FIGURE & INDEX NO.	QTY. PER ART.
95-910011-102	51	1
¤95-910011-121	51 - 20A	2
95-910011-131	51	2
95-910011-132	51 - 18A	2
95-910011-133	51	2
95-910011-134	51 - 16A	2
95-910011-145	51	2
95-910011-146	51	2
95-910011-149	51 - 4B	2
95-910011-151	51 - 4A	2
95-910011-153	51 - 5	2
¤95-910011-154	51	2
¤95-910011-203	51 - 3	2
¤95-910011-204	51	2
95-910011-303	51	4
95-910011-345	51 - 29	2
95-910011-347	51 - 31	2
95-910011-352	51 - 15	2
95-910011-371	51	1
¤95-910011-372	51	1
95-910011-373	51	1
¤95-910011-374	51	1
95-910011-381	51	2
95-910011-383	51	2
95-910011-391	51 - 7	8
95-910011-399	51 - 14	2
95-910011-400	51	2
¤95-910011-401	51	2
95-910011-407	51 - 26	2
95-910011-457	51	2
95-910011-459	51	2
¤95-910011-465	51 - 20	1
95-910011-466	51	1
¤95-910011-467	51 - 19	1
95-910011-468	51	1
¤95-910011-469	51	2
¤95-910011-469	51	1
¤95-910011-473	51	2
¤95-910011-473	51 - 23	1
95-910011-479	51 - 22	2
95-910011-483	51	2
¤95-910011-497	51 - 2A	2
95-910011-505	51	1
95-910011-506	51	1
¤95-910011-507	51 - 2C	2
95-910011-511	51	2
95-910011-513	51	1
95-910011-514	51	1
95-910011-515	51 - 2	2
95-910011-601	51 -	1
95-910011-602	51	1
¤95-910011-603	51	2
¤95-910011-604	51	2
95-910011-605	51	2
95-910011-606	51	2
95-910011-607	51 - 1	2
95-910011-608	51	1
95-910011-609	51	1
¤95-910011-617	51	2
¤95-910011-618	51	2
¤95-910011-657	51 - 1	2
95-910015	49	2
95-910015	50 -	1
95-910015-1	50 - 3	2
95-910015-113	50 - 8	2
95-910015-127	50 - 21	2
¤95-910015-135	50 - 19	2
¤95-910015-155	50 - 23	2
¤95-910015-159	50 - 24	2
¤95-910015-160	50 - 26	2
¤95-910015-17	50 - 5	2
¤95-910015-171	50 - 13	2
¤95-910015-173	50 - 12	2
¤95-910015-183	50 - 15	2
¤95-910015-185	50 - 14	2
95-910015-197	50 - 22	2
95-910015-203	50 - 16	2
¤95-910015-209	50 - 2A	2
¤95-910015-229	50	1
95-910015-237	50	1
95-910015-253	50	2
¤95-910015-257	50 - 7	2
95-910015-263	50	1
95-910015-269	50	1
¤95-910015-27	50 - 1	1
95-910015-275	50	1
95-910015-287	50	2
¤95-910015-29	50 - 2	2
95-910015-295	50	1
95-910015-295	50	1
95-910015-301	50	2
95-910015-305	50	1
95-910015-305	50	1
95-910015-307	50	1
95-910015-317	50	2
95-910015-317	50	1
95-910015-319	50	1
95-910015-329	49C	1
95-910015-329	50	1
95-910015-335	50	2
95-910015-51	50 - 10	2
95-910015-61	50 - 9	2
¤95-910015-63	50 - 6	2
95-910015-7	50 - 4	1
95-910016-1	52	REF
95-910016-19	52 - 13	1
95-910016-19	52A- 1	1
95-910016-2	52	REF
95-910016-20	52	1
95-910016-20	52A	1
95-910016-39	52	2
95-910016-43	52 - 4	1
95-910016-43	52	1
95-910016-45	52 - 5	2
95-910016-47	52 - 6	2
95-910016-53	52	2
95-910016-55	52 - 11	2
95-910016-57	52 - 12	2
95-910016-59	52 - 10	2
95-910016-601	52 -	1

PART NUMBER	FIGURE & INDEX NO.	QTY. PER ART.
95-910016-602	52	1
95-910016-603	52	1
95-910016-604	52	1
95-910016-61	52 - 7	2
95-910016-61	52	1
95-910016-63	52 - 3	2
95-910016-75	52 - 16	4
95-910016-75	52A- 4	4
95-910016-77	52 - 14	1
95-910016-77	52A- 2	1
95-910016-78	52	1
95-910016-78	52A	1
95-910016-79	52 - 15	1
95-910016-79	52A- 3	1
95-910016-80	52	1
95-910016-80	52A	1
95-910016-81	52	1
95-910016-81	52A	1
95-910016-82	52	1
95-910016-82	52A	1
95-910016-83	52	2
95-910016-85	52	2
95-910016-87	52	1
95-910016-87	52	1
95-910016-89	52	1
95-910016-89	52	1
95-910016-91	52	1
95-910016-93	52	1
95-910016-95	52	1
95-910016-97	52	1
¤95-910017-1	49 -110	4
¤95-910017-1	49A- 27	2
¤95-910017-1	49C- 83	2
¤95-910018	49A- 26	2
¤95-910018-1	49	1
¤95-910018-3	49 -112	1
¤95-910018-3	49C- 82	2
¤95-910019-1	49 - 12	1
¤95-910019-15	49 - 13	2
95-910019-23	49	4
95-910019-25	49	1
95-910019-27	49	1
¤95-910019-3	49	2
¤95-910019-9	49	1
¤95-910020	49 - 34	4
95-910020	49C- 70	4
95-910025-1	52A-	1
95-910025-13	52A- 8	2
95-910025-2	52A	1
95-910025-9	52A- 6	2
95-910026	52A- 16	2
95-910033-7	49C- 55A	2
95-919100	49	2
95-919100	53 -	2
95-919100-11	53 - 5	2
95-919100-11	53A- 18	2
95-919100-15	53 - 2	2
95-919100-15	53A- 15	2
95-919100-23	53 - 9	1
95-919100-23	53	1
95-919100-25	53	1
95-919100-27	53	1
95-919100-29	53A- 1	1
95-919100-3	53	2
95-919100-3	53A	2
95-919100-31	53A	1
95-919100-33	49A	1
95-919100-33	53A	1
95-919100-34	49A	1
95-919100-34	53A	1
95-919100-37	53A- 21	2
95-919100-39	49A	1
95-919100-39	53A	REF
95-919100-40	49A-	1
95-919100-40	53A	REF
95-919100-41	49C	1
95-919100-41	53	1
95-919100-42	49C	1
95-919100-42	53	1
95-919100-47	53 - 35	2
95-919100-5	53 - 1	2
95-919100-5	53A- 14	2
95-919100-601	53	2
95-919112-1	53	1
95-919112-103	53	2
95-919112-107	53	2
95-919112-109	53	1
95-919112-111	53	2
95-919112-15	53	1
95-919112-19	53 - 12	2
95-919112-23	53 - 19	2
95-919112-25	53 - 18	2
95-919112-27	53 - 17	4
95-919112-29	53 - 21	2
95-919112-31	53	2
95-919112-33	53	2
95-919112-35	53 - 41	2
95-919112-37	53 - 23	2
95-919112-39	53 - 14	2
95-919112-45	53 - 20	2
95-919112-51	53 - 26	2
95-919112-69	53 - 33	8
95-919112-81	53	2
95-919112-83	53	2
95-919112-85	53	2
95-919112-89	53	2
95-919112-93	53	4
95-919112-95	53	4
95-919112-95	53	2
95-919112-95	53	2
95-919112-95	53 - 34	8
95-919112-97	53	2
95-919114-1	53	1
95-919114-11	53 - 11	1
95-919114-17	53	1
95-919114-19	53	1
95-919117-1	53	1
95-919117-19	53	2
95-919117-27	53 - 32	2
95-919117-29	53 - 36	2

PART NUMBER	FIGURE & INDEX NO.	QTY. PER ART.
95-919117-3	53	1
95-919117-31	53 - 38	2
95-919117-35	53 - 37	2
95-919117-37	53 - 31	2
95-919117-39	53 - 28	2
95-919117-41	53 - 39	2
95-919117-43	53 - 40	2
95-919117-5	53 - 29	1
95-919117-7	53	1
95-920001	57	1
95-920001-1	57 - 51	2
95-920001-10	57 - 30	1
95-920001-100	57 - 40	1
95-920001-101	57 - 55	1
95-920001-103	57	1
95-920001-105	57 -101	1
95-920001-11	57	1
95-920001-111	57 - 91	2
95-920001-113	57 - 93	2
95-920001-115	57 - 87	2
95-920001-119	57 -126	2
95-920001-12	57 - 35	1
95-920001-121	57 - 96	2
95-920001-125	57 - 77	2
95-920001-127	57 - 83	2
95-920001-129	57 - 65	2
95-920001-13	57	1
95-920001-131	57	2
95-920001-137	57	1
95-920001-139	57	1
95-920001-14	57 - 32	1
95-920001-140	57	1
95-920001-141	57	1
95-920001-142	57	1
95-920001-143	57	1
95-920001-144	57	1
95-920001-145	57 -119	2
95-920001-15	57 -	1
95-920001-155	57	1
95-920001-16	57 - 34	1
95-920001-161	57	1
95-920001-163	57	1
95-920001-165	57 - 61	2
95-920001-21	57 - 99	1
95-920001-22	57	1
95-920001-23	57 - 97	1
95-920001-24	57	1
95-920001-25	57 -109	1
95-920001-26	57	1
95-920001-27	57 -110	1
95-920001-28	57	1
95-920001-29	57 -106	1
95-920001-3	57 - 53	2
95-920001-30	57	1
95-920001-31	57 -107	1
95-920001-32	57	1
95-920001-33	57 -103	2
95-920001-35	57 -102	2
95-920001-37	57	1
95-920001-38	57 - 42	1
95-920001-39	57	1
95-920001-40	57 - 44	1
95-920001-43	57 - 86	2
95-920001-45	57	1
95-920001-46	57 - 46	1
95-920001-5	57	1
95-920001-57	57 -128	1
95-920001-58	57	1
95-920001-59	57 - 64	1
95-920001-60	57	1
95-920001-601	57	1
95-920001-602	57	1
95-920001-604	57	1
95-920001-61	57 -114	2
95-920001-63	57 - 57	2
95-920001-7	57	1
95-920001-79	57 - 81	2
95-920001-8	57 - 58	1
95-920001-85	57 - 71	2
95-920001-87	57	1
95-920001-88	57 - 37	1
95-920001-9	57	1
95-920001-91	57 -112	2
95-920001-97	57 - 36	2
95-920001-99	57	1
95-920002	57	1
95-920002-17	57 -	1
95-920002-18	57	1
95-920002-23	57	2
95-920005-10	57A	1
95-920005-16	57D	1
95-920005-11	57B- 4	1
95-920005-13	57B	1
95-920005-15	57A- 4	1
95-920005-17	57A	1
95-920005-3	57A	1
95-920005-7	57B- 2	1
95-920005-8	57B	1
95-920005-9	57A- 6	1
95-920005-9	57D- 43	1
95-920006-1	57D-	1
95-920006-11	57D	1
95-920006-13	57D- 46	2
95-920006-3	57D	1
95-920006-5	57D- 41	2
95-920006-7	57D- 29	2
95-920006-9	57D- 59	2
95-920011-1	57	1
95-920011-2	57 - 1	1
95-920011-5	57A- 2	1
95-920011-6	57A	1
¤95-920011-7	57D- 2	1
¤95-920011-8	57D	1
95-920014	57 -124	1
95-920019-3	57D- 95	2
95-920020-1	49C	1
95-920020-1	57D	1
95-921012	6 - 16	2
¤95-921012-1	6 - 16	2
¤95-921012-3	6	2

PART NUMBER	FIGURE & INDEX NO.	QTY. PER ART.
¤95-921013-1	6 - 15	2
¤95-921013-3	6	2
¤95-921016-1	6 - 22	2
¤95-921016-3	6 - 22	2
95-924014	57	2
95-924014-1	57 - 67	2
95-924014-3	57	2
95-924014-5	57	2
95-924014-5	57B- 15	2
95-924015-1	57 - 78	1
95-924015-2	57	1
95-924015-3	57B- 27	2
95-924015-5	57B-	1
95-924015-6	57B	1
95-924019	57 - 72	2
95-924020	57B	1
95-924020-1	57B	1
95-924026	57D- 96	2
95-924027	57D-103	1
95-924027-1	57D	1
95-924027-3	57D	1
¤95-9279	37H- 12	2
95-9279	37I- 15	2
95-940000	54	1
95-940000-15	54 - 6	2
95-940000-21	54 - 13	1
95-940000-27	54	1
95-940000-31	54 - 14	2
95-940000-33	54 - 22	4
95-940000-35	54 - 30	4
95-940000-37	54	2
95-940000-41	54	1
95-940000-43	54	1
95-940000-47	54	1
95-940000-51	54	1
95-940000-67	54	1
95-940011	54 - 4	1
95-940011-1	48 -100	1
95-940011-3	48 -101	1
¤95-940011-3	48A- 74	1
¤95-940011-3	48A- 79	1
95-940011-5	46 - 23A	1
95-940011-5	58 -136M	1
95-940011-7	54	1
95-940017-1	54	2
95-940017-3	54	2
¤95-9491	37H- 2	8
95-960006	65	1
95-960006-1	65 - 1	1
95-960006-117	65 - 18	1
95-960006-123	65 - 14	2
95-960006-123	66 - 29	2
95-960006-139	65 - 35	4
95-960006-139	66 - 46	4
95-960006-15	65 - 4	1
95-960006-17	65 - 32	2
95-960006-17	66 - 43	2
95-960006-19	65 - 36	4
95-960006-19	66 - 47	4
95-960006-41	65 - 29	2
95-960006-41	66 - 40	2
95-960006-45	65 - 31	2
95-960006-45	66 - 42	2
95-960006-49	65	1
95-960006-49	66	1
95-960006-53	65	1
95-960006-57	65 - 25	1
95-960006-57	66 - 36	1
95-960006-603	49	2
95-960006-603	49C	2
95-960006-603	49K	2
95-960006-61	65 - 23	1
95-960006-65	65 - 21	1
95-960006-69	65 - 20	1
95-960006-73	65 - 11	1
95-960006-75	65 - 7	1
95-960006-77	65 - 6	1
95-960006-81	65 - 9	1
95-960006-83	65 - 8	1
95-960006-97	65 - 10	1
95-960007	66	1
95-960007-1	66 - 1	1
95-960007-19	66	1
95-960007-23	66 - 6	1
95-960007-25	66 - 14	1
95-960007-27	66 - 21	1
95-960007-29	66 - 24	1
95-960007-31	66 - 33	1
95-960007-33	66 - 34	1
95-960007-35	66 - 7	1
95-960007-37	66 - 15	1
95-960007-39	66 - 30	1
95-960007-41	66 - 31	1
95-960007-43	66 - 26	1
95-960007-49	66 - 19	1
95-960011-1	56	1
95-960011-13	56 - 6	2
95-960011-17	56 - 15	2
95-960011-2	56	1
95-960011-21	56 - 5	1
95-960011-23	56	1
95-960011-3	56 - 1	1
95-960011-4	56	1
95-960011-5	56 - 3	1
95-960011-6	56	1
95-960011-601	56	1
95-960011-602	56	1
95-960011-7	56 - 4	2
95-960014	65 - 3	1
95-960015	66 - 48	1
95-9626	37H- 3	8
95-970000	67 -	1
95-970000-1	67 - 39	1
¤95-970000-101	67 - 54	1
95-970000-105	67 - 37	1
¤95-970000-107	67 - 14	1
¤95-970000-107	68 - 54	1
95-970000-11	67 - 15	2
95-970000-113	67 - 49	1
95-970000-115	67 - 51	1

PART NUMBER	FIGURE & INDEX NO.	QTY. PER ART.
95-970000-119	67 - 28	1
95-970000-121	67 - 29	1
95-970000-123	67 - 59	1
95-970000-125	67	1
95-970000-127	67	1
95-970000-133	69 - 2	1
95-970000-135	67 - 68	1
95-970000-137	67 - 67	1
95-970000-139	67 - 69	1
95-970000-141	67 - 62	1
95-970000-143	67 - 66	1
¤95-970000-145	67	1
95-970000-147	67	1
¤95-970000-149	67 - 13	2
¤95-970000-149	68 - 21	2
95-970000-149	69 - 5	2
95-970000-149	70 - 3	2
95-970000-15	67 - 19	1
95-970000-151	67 - 71	1
95-970000-153	67	1
95-970000-154	67	1
95-970000-155	67 - 75	1
95-970000-157	67 - 76	1
95-970000-159	67 - 82	1
95-970000-16	67	1
95-970000-161	67 - 74	5
95-970000-163	67 - 80	1
95-970000-165	67 - 77	1
95-970000-167	67 - 83	1
95-970000-169	67 - 81	1
95-970000-17	67 - 21	1
95-970000-17	69	1
95-970000-177	67	1
95-970000-187	67	1
95-970000-19	67 - 36	1
95-970000-21	67 - 35	1
95-970000-23	67 - 34	1
95-970000-27	67 - 26	1
95-970000-29	67 - 25	1
95-970000-33	67 - 20	1
¤95-970000-33	68 - 10	1
95-970000-33	69 - 61	1
95-970000-37	67 - 55	1
95-970000-5	67 - 8	2
¤95-970000-55	67 - 56	1
95-970000-57	67 - 17	2
95-970000-7	67 - 9	2
95-970000-87	67 - 47	1
95-970000-89	67 - 50	1
95-970000-9	67 - 10	2
95-970000-91	67 - 46	1
95-970000-93	67 - 44	1
95-970000-95	67 - 43	1
95-970000-97	67 - 41	1
95-970000-99	67 - 53	1
¤95-970012	61B- 5	1
95-970012	67 - 88	1
95-980001-1	18	1
95-980001-123	18	1
95-980001-124	18	1
95-980001-127	18 - 66C	1
95-980001-128	18	1
95-980001-143	18 - 66E	1
95-980001-144	18	1
95-980001-185	2 - 62	1
95-980001-185	18 - 61	1
95-980001-186	2 - 63	1
95-980001-186	18	1
95-980001-189	2 - 64	1
95-980001-189	18 - 65	1
95-980001-190	2 - 65	1
95-980001-190	18	1
95-980001-193	2 - 60	1
95-980001-193	18 - 63	1
95-980001-194	2 - 61	1
95-980001-194	18	1
95-980001-2	18	1
95-980001-33	18 -	1
95-980001-34	18	1
95-980001-53	18	1
95-980001-54	18	1
95-980001-601	18	1
95-980001-602	18	1
95-980001-61	2 - 54	1
95-980001-61	3	1
95-980001-62	2 - 55	1
95-980001-62	3	1
95-980001-63	2 - 52	1
95-980001-63	3	1
95-980001-64	2 - 53	1
95-980001-64	3	1
95-980001-67	18 - 67	1
95-980001-68	18	1
95-980001-81	2 - 56	1
95-980001-82	2 - 57	1
95-980001-83	2 - 58	1
95-980001-83	3	1
95-980001-84	2 - 59	1
95-980001-84	3	1
95-980001-89	2 - 66	1
95-980001-89	18 - 66A	1
95-980001-90	2 - 67	1
95-980001-90	18	1
95-980001-93	18 - 69	1
95-980001-94	18	1
¤95-980019	51 - 28	2
¤9520	49	2
9520	49A- 13	2
¤9520	62 - 66	1
954143	49J- 7	2
954162	49J- 6	2
96-110007-11	18	1
96-110007-12	18	1
96-110007-3	19A- 44	1
96-110007-4	19A	1
96-110007-5	19A- 45	1
96-110007-6	19A	1
96-160006-3	6 - 11A	1
¤96-300001-41	37F- 9	2
¤96-300001-41	37G- 7	2

PART NUMBER	FIGURE & INDEX NO.	QTY. PER ART.
¤96-300001-41	37G- 21	2
96-324012-19	62B- 20	1
96-324012-23	62B- 19	1
96-324012-33	62B- 27	1
96-324012-35	62B- 28	1
96-324018-141	62B- 40	2
96-324029-1	61C- 66	1
¤96-324029-5	61C- 44	1
96-324030-35	61C	1
96-324030-7	61C- 1	1
96-324031	61C- 50	1
96-324031-1	61C	1
96-324032-3	61C	1
96-324032-7	61C	1
96-324033	61C	1
¤96-324033-1	61C- 25	1
96-324034-19	61C- 46	1
96-324034-21	61C	1
96-324034-23	69 - 72	1
96-324034-7	68	1
96-324034-9	68 - 46	1
96-324035-1	58A-	1
96-324035-13	58A	1
96-324035-15	58A- 93	1
¤96-324035-17	58A- 1	1
¤96-324035-18	58A	1
96-324035-23	58A	1
96-324035-25	58A- 85	1
96-324035-3	58A	1
96-324035-33	58A	1
96-324035-39	58A	1
96-324035-41	58A	1
96-324035-5	58A- 39	1
96-324035-7	58A- 40	1
96-324035-8	58A- 41	1
96-324035-9	58A- 95	1
96-324036-11	61C- 43	1
96-324036-3	58A- 55	1
¤96-324036-5	58A- 56	2
96-324036-605	58A- 54	1
96-324036-7	58A- 57	1
96-324037	58A- 42	1
96-324038-103	62B- 36	1
96-324038-104	62B- 45	1
96-324038-11	62A	1
96-324038-110	62B- 49	1
96-324038-112	62B- 47	1
96-324038-13	62A- 61	1
96-324038-27	62A- 52	1
96-324038-31	62A- 86	1
96-324038-33	62A- 84	1
96-324038-35	62A- 24	1
96-324038-37	62A- 22	1
96-324038-37	62B- 34	1
96-324038-39	62A- 4	1
96-324038-5	62A- 26	1
96-324038-61	62B- 35	1
96-324038-69	62A	1
96-324038-7	62A- 62	1
96-324038-85	62A	1
96-324038-9	62A	1
96-324038-93	62B- 3	2
96-324038-93	62B- 37	1
96-324038-93	62B- 44	1
96-324043	58A- 58	1
96-324044	58A- 61	1
96-324045	58A- 62	1
96-324047	58A- 94	1
96-324048	58A- 64	1
¤96-324049	58A- 59	1
¤96-324050	58A- 63	1
¤96-324052	58A- 60	1
96-324055-3	61C	1
96-324056-3	61C	1
96-324056-5	61C	1
96-324062-25	69	1
96-324068	14C- 3A	1
96-324068	67	1
¤96-324069	61C- 22	1
96-324078-11	62B	1
96-324078-9	62B	1
96-324101-3	49C	1
96-324101-4	49C	1
96-324102-15	61C	1
96-324102-5	61C	1
96-324105	71 - 8	1
96-324117	61C- 22A	1
96-324122-1	61C	1
96-324123-1	61C	1
96-324127-7	61C	1
96-324127-9	61C	1
96-324128-11	62B- 38	1
96-324128-13	62B- 39	1
96-324128-15	62B- 42	1
96-324128-17	62B- 43	1
96-324128-19	62B- 30	1
96-324128-21	62B- 32	1
96-324128-29	62B- 9	1
96-324128-9	62B- 21	1
96-324131-1	61C- 89	1
96-324131-7	61C- 90	1
96-324131-9	61C	1
96-324137	58A	1
¤96-340025	61C- 2	1
96-360002-5	63 -120	1
96-360011-674	17A	1
96-364012	41A	1
¤96-364012-3	41A- 68	1
96-364015	61C	1
96-364033	63	1
96-364033-1	63	1
96-364033-3	63	1
96-364033-5	63	1
96-364037	63	1
96-364038-1	61C- 78	1
96-364038-3	61C	1
96-364054-5	61C	1
96-364060-3	61C- 74	1
96-364060-5	61C	1
96-364061	61C- 79	1

PART NUMBER	FIGURE & INDEX NO.	QTY. PER ART.
¤96-380024	61B- 9	1
96-380029	69 - 41	2
¤96-380035	57D	2
96-380036-3	57D	2
96-380039	61C	1
96-384007	8A	4
96-410021-15	17A- 8	1
96-410021-16	17A	1
¤96-410021-603	17A	1
¤96-410021-605	17A	1
¤96-410021-607	17A	1
96-410021-609	17A- 1	1
96-410032-35	44 - 52	1
96-420016	9A	1
96-420016-1	9A- 24	1
96-420016-101	9A- 22	1
96-420016-103	9A- 30	1
96-420016-104	9A- 31	1
96-420016-11	9A- 11	2
P96-420016-111	9A	1
96-420016-113	9A- 43	1
96-420016-115	9A- 42	1
96-420016-119	9A	1
96-420016-121	9A- 20	1
U96-420016-13	9A- 18	1
¤96-420016-135	9A	1
96-420016-139	9A- 41	1
96-420016-143	9A	1
96-420016-145	9A	1
96-420016-147	9A	1
96-420016-15	9A- 12	1
96-420016-159	9A- 5	1
¤96-420016-161	9A- 7	1
96-420016-169	9A	1
96-420016-17	9A- 17	1
96-420016-175	9A	1
96-420016-177	9A- 19	1
96-420016-179	9A	1
96-420016-181	9A- 39	1
96-420016-183	9A	1
96-420016-185	9A	1
96-420016-187	9A	1
96-420016-189	9A	1
96-420016-191	9A	1
96-420016-21	9A- 26	1
96-420016-27	9A- 10	1
¤96-420016-29	9A- 15	3
96-420016-5	9A- 14	1
¤96-420016-55	9A- 13	2
¤96-420016-57	9A- 35	1
¤96-420016-59	9A- 36	1
96-420016-65	9A- 38	1
96-420016-69	9A	1
96-420016-71	9A- 25	1
96-420016-73	9A- 27	1
96-420016-75	9A-	1
96-420016-81	9A- 37	1
96-420016-87	9A- 40	1
96-420016-89C	9A	1
96-420016-9	9A- 21	1
96-420016-95	9A- 9	1
¤96-420016-97	9A- 2	1
¤96-420016-99	9A- 29	1
96-420029-1	11C- 1	1
96-420029-3	11C	1
96-420030-1	11C	1
96-420030-3	11C	1
96-430010-11	11A- 7	1
96-430010-12	11A	1
96-430010-15	11A- 3	1
96-430010-16	11A	1
96-430010-17	11A- 2	1
96-430010-18	11A	1
96-430010-21	11A- 4	1
96-430010-22	11A	1
96-430010-23	11A- 1	1
96-430010-24	11A	1
96-430010-27	11A- 6	1
96-430010-28	11A	1
96-430010-29	11A- 5	1
96-430010-30	11A	1
96-430010-53	11A- 8	2
96-430010-65	11A	1
¤96-430011-17	9	1
¤96-430011-19	9 - 6	1
¤96-430011-21	9	1
¤96-430011-23	9	1
¤96-430011-25	9 - 11	1
¤96-430011-29	9 - 7	1
96-440015-13	47D- 62	1
96-440015-17	47D- 51	1
96-440015-19	47D- 63	2
96-440015-21	47D- 53	1
96-440015-23	47D- 50	1
96-440015-27	47D- 54	1
96-440015-29	47D- 55	1
96-440015-31	47D- 56	2
96-440015-37	47D- 52	1
96-440015-5	47D- 72	1
96-440015-603	47D	1
¤96-500020-23	68 - 30	2
96-500022-15	68 - 57	1
96-500022-25	68 - 56	1
96-500022-27	68	1
96-500022-31	68	1
96-524017	58A	1
96-524017	59	1
96-524017-1	59	1
96-524017-3	59	1
96-524017-5	59	1
96-524017-7	59	1
¤96-524029-1	60 - 11	1
¤96-524029-3	60	1
96-530001-105	14B- 16	1
96-530001-11	14B- 58	1
96-530001-11	14C- 7	1
96-530001-117	14C- 45	1
96-530001-117	14D- 9	1
96-530001-127	14B- 3	2
96-530001-127	14C- 47	2

PART NUMBER	FIGURE & INDEX NO.	QTY. PER ART.
96-530001-129	14B- 4	2
96-530001-129	14C- 48	2
96-530001-13	14B- 57	1
96-530001-13	14C- 8	1
96-530001-135	14C- 51	1
96-530001-137	14B- 55	1
96-530001-147	14B- 35	1
96-530001-147	14C- 36	1
96-530001-161	14C- 4	1
96-530001-17	14B- 72	1
96-530001-177	14C- 26	1
96-530001-209	14B- 36	1
96-530001-209	14C- 29	1
96-530001-209	14D- 20	1
96-530001-219	14B- 64	1
96-530001-219	14C- 10	1
96-530001-219	14D- 88	1
96-530001-220	14B- 65	1
96-530001-220	14C- 20	1
96-530001-220	14D- 57	1
96-530001-221	14B- 66	2
96-530001-221	14C- 9	1
96-530001-221	14C- 18	1
96-530001-221	14D- 56	1
96-530001-221	14D- 89	1
96-530001-227	14B- 18	1
96-530001-229	14B- 45	1
96-530001-23	14B- 46	1
96-530001-25	14B- 48	1
96-530001-25	14C- 12	1
96-530001-27	14B- 51	1
96-530001-27	14C- 11	1
96-530001-31	14C- 38	1
96-530001-331	14C- 52	4
96-530001-35	14C- 30	1
96-530001-41	14B- 40	1
96-530001-41	14C- 32	1
96-530001-41	14D- 26	1
96-530001-43	14B- 42	1
96-530001-43	14C- 33	1
96-530001-45	14B- 37	1
96-530001-51	14B- 33	1
96-530001-57	14B- 32	1
96-530001-57	14C- 35	1
96-530001-615	12B- 21	1
96-530001-65	14B- 17	1
96-530001-67	14B- 21	1
96-530001-67	14C- 27	1
96-530001-69	14B- 23	1
96-530001-69	14C- 28	1
96-530001-73	14C- 25	1
96-530001-75	14B- 15	1
96-530001-77	14D- 55	1
96-530001-79	14B- 9	1
96-530001-79	14C- 19	1
96-530001-85	14B- 8	1
96-530001-85	14C- 17	1
96-530001-89	14C- 16	1
96-530001-9	14C- 5	1
96-530002-103	14C- 15	1
96-530002-123	14C	1
96-530002-125	14C	1
96-530002-127	14C- 6	1
96-530002-135	14D- 7	2
96-530002-19	14C- 40	1
96-530002-29	14C- 43	1
96-530002-37	14C- 57	1
96-530002-51	14D- 81	1
96-530002-55	14C	1
96-530002-55	14D- 13	1
96-530002-61	14C- 46	1
96-530002-63	14C- 50	1
96-530002-65	14C- 49	1
96-530002-67	14D- 67	AR
96-530002-69	14D- 68	AR
96-530002-75	14C- 98	1
96-530002-75	14D	1
96-530002-79	14C- 99	1
96-530002-79	14D-112	1
96-530002-83	14D	1
96-530002-93	14D- 14	3
96-530002-95	14D- 15	3
96-530002-99	14C- 2A	1
96-530003-55	14B- 31	1
96-530003-59	14B- 30	1
96-530004-107	14D- 83	1
96-530004-11	14C- 21	1
96-530004-111	14D- 70	1
96-530004-115	14D- 63	1
96-530004-119	14D- 52	1
96-530004-123	14D- 36	1
96-530004-127	14D- 35	1
96-530004-131	14D- 21	1
96-530004-137	14D- 84	1
96-530004-139	14D- 87	1
96-530004-141	14D- 66	1
96-530004-145	14D- 53	1
96-530004-147	14D- 54	1
96-530004-149	14D- 34	1
96-530004-151	14D- 38	1
96-530004-153	14D- 30	1
96-530004-155	14D- 25	1
96-530004-195	14D- 18	1
96-530004-197	14D- 17	1
96-530004-199	14D- 50	1
96-530004-21	14C	1
96-530004-31	14C- 22	1
96-530004-49	14D- 82	1
96-530004-59	14D- 49	1
96-530004-61	14D- 37	1
96-530004-63	14D- 28	1
96-530004-65	14D- 22	1
96-530006-131	14D- 76	1
96-530006-29	14D- 61	1
96-530006-49	14D- 48	1
96-530006-55	14D- 46	1
96-530006-59	14D- 40	1
96-530006-63	14D- 41	1
96-530006-65	14D- 39	1
96-530006-71	14D- 29	1

PART NUMBER	FIGURE & INDEX NO.	QTY. PER ART.
96-530006-9	14D- 80	1
96-530013-1	14C- 79	1
96-530013-33	14C- 80	3
¤96-530013-35	14C	3
96-530013-53	14C	1
¤96-530013-83	47D- 28	1
96-534010	14B-114	4
96-534010-601	12B- 10	1
96-534010-602	12B	1
96-534010-603	12B	1
96-534010-604	12B	1
96-534011	14D	1
96-534011-3	14B- 5	1
96-534011-5	14D	1
96-534011-7	14D- 3	1
96-534013-11	13C- 47	1
96-534013-12	13C	1
96-534013-17	12B- 13	1
96-534013-19	12B- 14	1
96-534016-1	13C- 38	4
96-534016-3	12B	1
¤96-534017-21	13C- 46	2
¤96-534017-25	13C- 45	2
¤96-534017-33	13C	1
¤96-534017-34	13C- 42	1
¤96-534017-7	13C- 48	1
¤96-534017-8	13C	1
¤96-534020-1	13C- 40	4
96-534024-1	14C- 53	1
96-534024-3	14C	1
96-534024-33	14C- 54	1
96-534024-34	14C	1
96-534027	12B- 12	1
¤96-534043	6 - 9	2
¤96-534046	6	1
96-534046	14B- 63	1
¤96-534046	14C- 38	1
96-534046	14D- 31	1
96-534052	14D- 79	1
96-534071-1	13D-	1
96-534071-1	13E-	1
96-534072-1	13D	1
96-534072-11	13D- 56	2
96-534072-11	13E- 36	2
96-534072-15	13D- 55	2
96-534072-15	13E- 35	2
96-534072-3	13D	1
96-534072-5	13E	1
96-534072-7	13E	1
96-534073-1	13D	1
96-534073-11	13D- 7	2
96-534073-13	13D- 8	2
96-534073-15	13E- 11	2
96-534073-3	13D	1
96-534073-7	13D	2
96-534073-9	13D	1
96-534074-1	13E	1
96-534074-11	13E	2
96-534074-19	13E	1
96-534074-21	13E- 15	2
96-534074-23	13E- 7	1
96-534074-3	13E	1
96-534075-31	14D-113	1
96-534075-41	14D	1
96-534075-71	14D	1
96-534075-75	14D	1
96-534078-3	14D	1
96-534078-9	14D	5
96-534079-1	14D	1
96-534079-23	14D	1
96-534079-5	14D	1
96-534080-23	14D	
96-534080-24	14D	1
96-534080-25	14D	1
¤96-550010-1	4BA-124	1
96-534080-43	14D	1
96-550013-1	47D-	1
96-550013-101	47D	1
96-550013-103	47D- 36	1
96-550013-147	47D	1
96-550013-17	47D- 1	1
96-550013-21	47D- 35	1
96-550013-27	47D	1
96-550013-29	47D- 3	1
96-550013-3	47D	1
96-550013-31	47D- 4	1
¤96-550013-33	47D- 33	1
¤96-550013-35	47D- 71	1
¤96-550013-37	47D- 24	1
96-550013-41	47D	1
96-550013-43	47D- 5	1
¤96-550013-45	47D- 7	1
¤96-550013-47	47D- 6	1
¤96-550013-49	47D- 34	1
96-550013-5	47D	1
¤96-550013-51	47D- 15	1
¤96-550013-51	47D- 30	2
¤96-550013-53	47D- 16	1
96-550013-55	47D- 68	2
96-550013-57	47D- 67	1
96-550013-58	47D	1
96-550013-59	47D- 66	1
96-550013-60	47D	1
96-550013-601	47D	1
96-550013-604	47D	1
96-550013-607	47D	1
96-550013-608	47D	1
96-550013-61	47D- 65	1
96-550013-613	47D	1
96-550013-615	47D	1
96-550013-616	47D	1
96-550013-62	47D	1
96-550013-624	47D	1
96-550013-63	47D- 64	2
¤96-550013-69	47D- 11	1
96-550013-7	47D	1
96-550013-75	47D	1
96-550013-77	47D- 38	1
¤96-550013-83	47D	2
¤96-550013-85	47D- 37	1

PART NUMBER	FIGURE & INDEX NO.	QTY. PER ART.
96-550013-9	47D	1
96-550013-91	47D	1
96-550013-93	47D	1
96-550013-95	47D- 27	1
96-550013-97	47D	1
96-550013-99	47D- 39	1
96-550015-11	47D- 44	1
96-550015-13	47D- 45	1
96-550015-3	47D- 42	1
96-550015-601	47D	1
96-550015-9	47D- 43	1
96-550016-1	47D	1
96-550016-3	47D	1
96-550016-5	47D	1
96-550016-7	47D	1
96-550016-9	47D	1
¤96-554011	47D- 41	1
96-554011-1	47D	1
96-554011-7	47D	1
96-554013	47D	1
96-554022	48A	1
¤96-560001-35	64 - 30	1
¤96-560001-37	64 - 33	1
¤96-560001-39	64 - 34	1
¤96-560001-41	64 - 14	1
¤96-560001-45	64 - 22	1
¤96-560001-59	64 - 51	1
¤96-560001-59	64A- 78	1
96-560001-77	64 - 18	1
¤96-560002-29	64A- 15	1
¤96-560002-31	64A- 13	1
¤96-560004-13	64A- 57	2
¤96-560004-15	64A- 72	1
¤96-560004-21	64A- 76	1
¤96-560004-25	64A- 22	1
¤96-560004-31	64A- 52	1
¤96-560004-31	64A- 59	2
¤96-560004-31	64A- 74	2
¤96-560011-1	64 - 25	1
¤96-560011-3	64 - 28	1
96-560012	64A- 20	1
96-560013-7	64A	1
96-560013-9	64A	1
96-560022-1	64A	1
96-560022-11	64A- 33	1
96-560022-13	64A- 38	1
96-560022-15	64A- 24	1
96-560022-17	64A- 23	1
96-560022-5	64A- 25	1
96-560022-601	64A	1
96-560022-7	64A- 28	1
96-610005-601	29	1
96-610005-602	29	1
¤96-610005-651	29	1
¤96-610005-652	29	1
96-810010	36A	1
96-810011	36A	1
96-81002--21	71 - 23	1
96-810020	37	1
96-810021	37	1
96-810022-1	71	1
96-810022-11	71 - 10	1
96-810022-17	71 - 22	2
96-810022-25	71 - 15	1
96-810022-27	71 - 13	1
96-810022-27	71 - 24	2
96-810022-29	71 - 11	2
96-810022-31	71	1
96-810022-33	71 - 9	2
96-810022-37	71 - 5	2
96-810022-39	71 - 16	1
96-810022-41	71	2
96-810022-43	71 - 1	1
96-810022-44	71	1
96-810022-45	71 - 26	1
96-810022-5	71 - 25	1
¤96-820011	41A- 67	1
96-820030	44 - 51	1
96-910001-17	69	1
96-910002-3	69	1
96-920001-1	57C- 4	2
96-920001-10	57D	1
96-920001-100	57C	1
96-920001-101	57C	1
96-920001-103	57A- 13	1
96-920001-104	57A	1
96-920001-105	57A- 21	2
96-920001-107	57A	1
96-920001-107	57D- 7	1
96-920001-11	57C- 18	1
96-920001-11	57D- 75	1
96-920001-111	57A- 27	2
96-920001-111	57D- 17	2
96-920001-113	57A- 25	2
96-920001-113	57D- 22	2
96-920001-115	57A- 28	2
96-920001-115	57D- 15	2
96-920001-12	57D	1
96-920001-125	57B- 25	2
96-920001-127	57A	1
96-920001-127	57D- 13	1
96-920001-13	57C- 19	1
96-920001-13	57D- 77	1
96-920001-131	57B	1
96-920001-133	57A- 15	1
96-920001-134	57A	1
96-920001-135	57A- 7	1
96-920001-136	57A	1
96-920001-137	57A- 5	1
96-920001-139	57A- 11	1
96-920001-14	57C	1
96-920001-14	57D	1
96-920001-140	57A	1
96-920001-15	57C- 20	1
96-920001-153	57B- 6	1
96-920001-154	57B	1
96-920001-16	57C	1
96-920001-163	57D- 62	2
96-920001-171	57A	1
96-920001-171	57D- 55	1
96-920001-175	57C- 10	1
96-920001-175	57D- 66	1
96-920001-176	57C	1
96-920001-176	57D	1
96-920001-177	57D- 64	1
96-920001-178	57D	1
96-920001-183	57B- 13	2
96-920001-185	57B- 10	1
96-920001-186	57B	1
96-920001-187	57B- 12	2
96-920001-189	57D- 98	2
96-920001-191	57D- 97	2
96-920001-205	57A	1
96-920001-206	57A	1
96-920001-207	57A	1
96-920001-208	57A	1
96-920001-209	57A	1
96-920001-209	57A	1
96-920001-21	57A- 24	1
96-920001-210	57A	1
96-920001-210	57A	1
96-920001-213	57D- 24	1
96-920001-214	57D	1
96-920001-215	57D- 32	1
96-920001-216	57D	1
96-920001-22	57A	1
¤96-920001-229	57D- 30	2
96-920001-23	57A- 12	1
96-920001-235	57D- 36	2
96-920001-24	57A	1
96-920001-243	57D- 79	1
96-920001-244	57D	1
96-920001-253	57D- 50	1
96-920001-255	57D	1
96-920001-257	57D- 48	1
96-920001-259	57D	1
96-920001-3	57C- 3	2
96-920001-33	57A	1
96-920001-33	57D- 53	1
96-920001-35	57B	1
96-920001-37	57A- 34	1
96-920001-38	57A	1
96-920001-39	57A- 35	1
96-920001-40	57A	1
96-920001-45	57A- 36	1
96-920001-45	57D- 52	1
96-920001-47	57A- 30	1
96-920001-47	57D- 4	1
96-920001-49	57B	1
96-920001-5	57C- 2	1
96-920001-50	57B	1
96-920001-57	57B- 3	1
96-920001-58	57B	1
96-920001-59	57A- 31	1
96-920001-59	57D- 6	1
96-920001-61	57D- 71	1
96-920001-62	57D	1
96-920001-63	57C- 5	2
96-920001-69	57B- 8	1
96-920001-7	57C- 7	1
96-920001-70	57B	1
96-920001-71	57B- 7	1
96-920001-72	57B	1
96-920001-73	57B- 5	1
96-920001-77	57B- 9	1
96-920001-79	57B- 23	2
96-920001-79	57D- 99	2
96-920001-8	57C	1
96-920001-81	57C- 12	1
96-920001-81	57D- 68	1
96-920001-82	57C	1
96-920001-82	57D	1
96-920001-87	57C- 22	1
96-920001-88	57C	1
96-920001-89	57A- 29	1
96-920001-89	57D- 14	1
96-920001-9	57D- 81	1
96-920001-95	57C- 8	1
96-920001-96	57C	1
96-920001-97	57C- 17	2
96-920001-97	57D- 73	2
96-920001-99	57C- 15	1
96-920002-2	69	1
96-920011-11	57D-101	1
96-920011-13	57D	1
96-920011-5	57D	1
96-920011-7	57D	1
96-920013	148-106	1
96-920013	14C- 83	1
96-920013	14D- 93	1
96-920015	57A	2
96-924010	57B- 19	2
96-970001-11	68 - 12	1
96-970001-11	69 - 63A	1
96-970001-165	68	1
96-970001-167	68 - 14	1
96-970001-169	68 - 15	1
96-970001-173	68	1
96-970001-19	68	1
96-970001-19	69	1
96-970001-19	70 - 21	1
96-970001-21	68	1
96-970001-21	69 - 7	1
96-970001-21	70 - 22	1
¤96-970001-23	68 - 6	2
96-970001-27	68	1
96-970001-3	68	1
96-970001-31	68 - 35	1
96-970001-33	68 - 8	1
96-970001-33	69 - 54	1
96-970001-33	70 - 8	1
¤96-970001-35	68 - 39	2
96-970001-37	68 - 41	1
96-970001-39	68	1
¤96-970001-41	68 - 26	2
96-970001-41	69 - 34	2
96-970001-43	68	1
96-970001-45	68 - 24	1
96-970001-47	68 - 18	1
96-970001-47	69 - 63	1
96-970001-49	68 - 34	2
96-970001-5	69	1
96-970001-5	70 - 33	1
96-970001-51	68 - 52	1
96-970001-51	70	1
96-970001-53	68 - 9	1
96-970001-53	69 - 58	1
¤96-970001-53	70 - 11	1
96-970001-54	68	1
96-970001-54	69	1
96-970001-54	70 - 20	1
96-970001-55	68	2
96-970001-61	68 - 20	1
96-970001-61	69 - 6	1
96-970001-61	70 - 6	1
96-970001-63	68 - 2	1
96-970001-63	69 - 13	1
96-970001-65	68	1
96-970001-65	69 - 14	1
96-970001-67	68 - 44	1
96-970001-69	68 - 45	1
96-970001-7	69 - 65	1
96-970001-7	70 - 32	1
96-970001-71	68	1
96-970001-73	68	1
¤96-970001-77	68 - 23	2
96-970001-9	69 - 66	1
96-970001-9	70 - 37	1
96-970002-23	69 - 32	1
96-970002-25	69	1
96-970002-39	69 - 9	1
96-970002-41	69 - 10	1
96-970002-45	69 - 16	2
96-970002-47	69 - 35	4
96-970002-61	69	1
96-970002-63	69 - 38	1
96-970002-65	69	1
96-970002-67	69 - 52	2
96-970004-1	70 - 29	1
96-970004-11	70 - 17	1
96-970004-13	70 - 19	1
96-970004-15	70 - 23	1
96-970004-17	70 - 24	1
96-970004-19	70 - 30	1
96-970004-2	70 - 28	1
96-970004-21	70 - 40	1
96-970004-29	70 - 18	1
96-970004-3	70 - 15	1
96-970004-37	70	1
96-970004-5	70 - 16	1
96-970004-7	70 - 39	1
96-970004-9	70 - 38	1
¤96-970012	68 - 48	1
96-970012	69 - 75	1
96-980002-1	69 - 57	1
98-264-2-110	51	64
¤98264-2-110	51	64
98265-1-.130	53 - 3	8
98265-1-.130	53A- 16	8
98265-1-.150	53	2
98265-1-.150	53A	2
98265-1-080	8 - 63	4
¤98265-1-080	8 - 66	14
¤98265-1-080	8 - 69	16
98265-1-090	66 - 20	1
¤98265-1-120	17A	5
98265-2-.210	53	2
98265-2-.210	53A	2
¤98292-2-170	17 - 19	3
¤98292-2-170	17A- 17	3
9899	8A	1
¤99785-2	51	64
¤99833P098	17A	5
99833P098	66	1
¤99836	8 - 32	1
¤99836	8 - 64	4
¤99836	8 - 67	14
¤99836	8 - 70	16
¤99836	17	3
¤99836	17A	5
¤99836	17A	3
99836	53	12
99836	53A	12
99836	66	1
¤99947P130	17A	3

PART NUMBER	FIGURE AND INDEX NO.	QTY. PER ARTI-CLE
1931887	49H- 2	2
1933101	49H	2
1933104	49H	2
1933239	49H- 5	2
193385	49E- 43	2
1935548	49J- 31	2
1938522	49H- 15	6
1938637	49I- 12	2
1938731	49I- 10	2
1938732	49I- 7	2
1938736	49I- 6	2
1938737	49I- 8	2
1938741	49I- 11	2
193902	49D	1
1939405	49I- 5	2
1943385	49H- 18	6
1945098	49J	2
1945099	49J- 3	2
1945101	49J	2
1945105	49J	2
1945106	49J	2
1945109	49J	2
1948704	49I- 9	2
1954	14A-116	3
1954	14A-118	3
196000	49E	4
2-1544-84	62	2
2-2844-75	62 - 65	2
2A18260	14C- 14	4
200242	49J- 52	4
200362	49J	8
203886-2	62 - 38	2
203886-2	62A- 88	2
204864	49E- 44	2
206-108172	7 - 10	1
206336	49E- 34	2
206337	49E- 45	2
2068-265	48B	1
207-16C	49F- 19	2
207-400301-00-	60	4
210022	49E- 4	2
210023	49E- 5	2
210031	49E- 47	2
210034	49E- 10	2
210035	49E- 48	2
210036	49E- 35	2
210044	49E- 12	2
210067	49E- 49	2
210100	49E- 22	2
210101	49E- 23	2
210109	49E- 13	2
210111	49E- 9	2
210112	49E- 39	4
210123	49E- 3	2
210124	49E- 6	2
210146	49E- 11	2
210195	49 - 27	2
210195	49E-	2
210284	49E- 2	16
210300	49	2
210300	49E	2
210360	49A- 20	2
210360	49C- 18	2
2104	10 - 70	1
212	7	1
2140-54	57D- 28	2
2178	12 - 1	4
218036	49E- 38	4
218537	49E- 25	2
22	14	12

PART NUMBER	FIGURE AND INDEX NO.	QTY. PER ARTI-CLE
22	14	3
22	14	3
22A17-02	58 - 18D	1
22A17-02	58A	1
22A21-6-02	10	4
22A3-82	29	4
22K1-02	35	2
22K1-048	13C	2
22NA17A022	65	1
22NA21-02	13B	40
223003	49E- 36	2
2238-14	48B- 40	1
2240-14	48B	1
23S2004-1-1	67 - 6	1
23S2004-1-2	67 - 7	1
23S2004-10-1	67	1
23S2004-10-2	67	1
23S2004-13-1	67	1
23S2004-2-1	67 - 4	1
23S2004-2-2	67 - 5	1
23S2004-3-1	67 - 2	1
23S2004-3-2	67 - 3	1
23S2004-4-1	67 - 1	1
23S2004-5-1	67	1
23S2004-5-2	67	1
23S2004-6-1	67	1
231	14C- 96	1
24C54	7	1
2505	58 -147	1
2505	58A-100	1
2505	63 - 37	1
2505	63 - 37B	1
2505	63 - 39	1
2520387	49D	1
2520625	49D	1
2520626	49D	1
2520631	49D	2
2520632	49D	2
2520635	49D	1
2520636	49D	1
2520646	49D	1
2520647	49D	1
2520650	49D	1
2520652	49D	1
2520692	49D	1
2520872	49D	1
2520873	49D	1
2520874	49D	1
2520875	49D	2
2520876	49D	1
2520878	49D	1
2520879	49D	1
2520880	49D	1
2520881	49D	1
2520882	49D	1
2520884	49D	1
2520886	49D	1
2520887	49D	1
2520888	49D	1
2520890	49D	1
2520891	49D	1
2520892	49D	1
2520893	49D	1
2520894	49D	1
2520895	49D	1
2520920	49D	1
2521144	49D	1
2521145	49D	1
2521196	49D	1
2521287	49D	1

PART NUMBER	FIGURE AND INDEX NO.	QTY. PER ARTICLE
2521566	49D	1
2521738	49D	1
2522021	49D	1
2522022	49D-	1
2522158	49D	1
2522267	49D	1
2522271	49D	1
2522272	49D	1
2522273	49D-	1
2524147	49D-	1
2850-9	48B- 38	14
2940-2	48B- 37	1
2951-11	48B- 24	1
295158-56	58 - 18C	1
295158-56	58A- 21	1
295300	12A- 13	2
295460-3-5	12A- 12	2
295846-1	51	64
296-2	48B- 27	2
297-6	48B- 28	2
299-6	48B- 26	2
3AG	63 - 63C	4
3D1133-2	61B- 4	1
3D1247	67 - 61	1
3D1312	67 - 72	1
3D1313	67 - 89	1
3D1347	67 - 57	1
3D1348	67 - 48	1
3D1349	67 - 52	1
3D1473	67 - 85	1
3P-194FA	49	2
30C57	7	1
3005A1	62A	2
302D	36 - 28	2
302D	36A- 27	2
302D	37 - 43	2
302D	41 - 34	1
302D	41A- 14	1
303	47C- 34	5
3036C.P	63 - 95	6
3052	63 - 61D	4
3052	63 - 61G	4
3052	63 - 61K	1
3052	63 - 61N	2
306-12	48B- 34	1
31-408	25 - 19	2
31-408	25A- 9	2
313B38	48B	1
315-S-5	49D	1
315-S-5	49D	1
3153-00-1	48 - 52	1
3153-00-1	48A- 53	1
316	42 - 43	4
319	63 - 30	1
31901	25	2
31902	63 - 56	2
31903	25	1
31903	63 - 57	2
32-425-10	49G- 3	2
32-425-4	49G- 2	2
32-425-5	49G- 9	2
32-425-6	49G- 10	2
32-425-7	49G- 1	2
32-425-8	49G- 4	2
32-436	49 - 47	2
32-436	49G-	2
32-436-1	49G- 8	2
32-436-2	49G- 5	2
32-436-3	49G- 6	2
32-436-9	49G- 7	2

PART NUMBER	FIGURE AND INDEX NO.	QTY. PER ARTICLE
32FE-524	37B- 3	12
320-62-5.06S	48 - 5	1
320-62-5.06S	48A- 5	1
32445	58A	1
327	61C- 57	7
329B4	48B- 16	1
33-130000-11	21A- 20	2
33-130000-17	21A- 21	2
33-130000-19	21A- 22	2
33-130000-3	2	1
33-130000-7	21A- 17	2
33-130000-9	21A- 19	2
33-199-1	57H- 7	2
33-199-106	57H	2
33-199-28	57H	2
33-199-45	57H	2
33-199-5	57H- 3	2
33-199-6	57H- 4	4
33-199-7	57H- 5	2
33-199-8	57H- 6	2
33-199-906	57H- 1	2
33-199-907	57H- 2	2
33-199-909	57H	2
33-199-910	57H	2
33-324032	14C- 60	1
33-340000-61	14B-107	1
33-410010-1	11 -	1
33-410010-2	11	1
33-410010-3	11	1
33-410010-4	11	1
33-410040-4	12C- 24	2
33-530000-57	14A	1
33-530000-57	14B- 96	1
33-530000-57	14C	1
33-530002-77	14B-103	2
33-530011-1	14C- 40	1
33-534010-13	12C- 19	2
33-534010-21	12C- 21	4
33-534010-33	12C- 11	2
33-534010-33	13C- 9	2
33-534015	14A	1
33-534015-1	14A	1
33-534015-2	14A	1
33-534015-3	14A- 91	1
33-534015-4	14A- 94	1
33-534015-7	14C- 87	1
33-534015-8	14C	1
33-534018-1	14B-104	2
33-940000-9	54 - 35	1
338491	49D	1
34CB759	14C- 42	2
342617	49D	1
34810A	49	2
35-000026	6 - 13	2
35-000061	6 - 21	1
35-000064-1	6	1
35-000064-3	6	1
35-001052	14C	1
35-050084-21	12 - 21	2
35-050084-23	12 - 22	2
35-105005-10	18 - 1	1
35-105005-11	18	1
35-105005-12	18 - 3	1
35-105005-15	18	1
35-105005-8	18 - 2	1
35-105005-9	18	1
35-105110	18 - 4	1
35-105110-1	18	1
35-105111	18 - 9F	2
35-115034	19A- 43	1

	PART NUMBER	FIGURE AND INDEX NO.	QTY. PER ARTI-CLE	
	35-115034-1	19A	1	
	35-115035	19 - 52	1	
	35-115035	19A- 42	1	
	35-115035-1	19	1	
	35-115035-1	19A	1	
	35-115046	19A- 38	1	
	35-115046-1	19A	1	
	35-115071-10	18 - 41	2	
	35-115071-12	18 -	2	
	35-115147	18	2	
	35-115147-2	18 - 37	2	
	35-115166-14	19A- 35	2	
	35-115166-18	18 - 16	1	
	35-115166-19	18	1	
	35-115194-38	19 - 13	1	
	35-115194-40	19	1	
	35-115199-12	18 - 50	1	
	35-115200-20	19 - 11D	2	
	35-115200-20	19A-110	2	
	35-115200-22	19 - 11C	2	
	35-115200-22	19A-109	2	
	35-115200-24	19 - 11B	2	
	35-115200-24	19A-108	2	
	35-115200-26	19 - 11A	2	
	35-115200-26	19A-107	2	
	35-115200-42	18 - 48	3	
	35-115200-42	18	2	
	35-115211-9	2	1	
	35-115256	18 - 45	1	
	35-115383-2	19A- 79	1	
	35-115383-3	19A	1	
	35-115431-10	19A	1	
	35-115431-100	2 - 10	1	
	35-115431-107	2 - 11	1	
	35-115431-108	2 - 12	1	
	35-115431-109	19A- 50	1	
	35-115431-110	19A	1	
	35-115431-111	19A- 51	1	
	35-115431-112	19A	1	
	35-115431-113	19A- 48	1	
	35-115431-114	19A	1	
	35-115431-115	19A- 49	1	
	35-115431-116	19A	1	
	35-115431-117	19A- 52	1	
	35-115431-118	19A	1	
	35-115431-23	19A- 56	1	
	35-115431-24	19A	1	
	35-115431-27	19A- 57	1	
	35-115431-28	19A	1	
	35-115431-29	19A- 59	1	
	35-115431-30	19A	1	
	35-115431-33	19A- 60	1	
	35-115431-34	19A	1	
	35-115431-39	19A- 53	1	
	35-115431-40	19A	1	
	35-115431-5	19A- 37	1	
	35-115431-6	19A	1	
	35-115431-7	19A- 64	1	
	35-115431-8	19A	1	
	35-115431-83	19A- 46	1	
	35-115431-84	19A	1	
	35-115431-9	19A- 63	1	
	35-115431-91	19A	1	
	35-115431-92	19A	1	
	35-115431-99	2 - 9	1	
	35-135025	21 -	1	
	35-135025-10	21A- 14	2	
	35-135025-2	21A- 9	8	
	35-135025-20	3	1	
	35-135025-20	2	2	

	PART NUMBER	FIGURE AND INDEX NO.	QTY. PER ARTI-CLE	
	35-135025-24	21 - 5	1	
	35-135025-26	21 - 3	1	
	35-135025-32	21A- 7	2	
	35-135025-36	21A- 6	2	
	35-135025-6	2	1	
	35-165004	18 - 71	4	
	35-165004	22 - 11	REF	
	35-165004	22A- 32	4	
	35-165050-30	22 - 4	1	
	35-165050-30	22A- 12	2	
	35-165050-31	22	1	
	35-165050-31	22A	2	
	35-165050-34	22 - 5	1	
	35-165050-34	22A- 6	2	
	35-165050-35	22	1	
	35-165050-35	22A	2	
	35-165050-40	22 - 6	2	
	35-165050-40	22A- 11	2	
	35-165050-605	22 -	1	
	35-165050-606	22	1	
	35-165050-62	22A- 13	2	
	35-165050-63	22A	2	
	35-165050-64	22A- 7	2	
	35-165050-65	22A	2	
	35-165050-78	22	1	
	35-165050-79	22	1	
	35-165050-84	22A- 10	2	
	35-165051-8	3	1	
	35-165051-8	2	1	
	35-165051-9	3	1	
	35-165051-9	2	1	
	35-324091	62	1	
	35-324092	62	1	
	35-324093	62	1	
	35-324098	62 - 20	1	
	35-324098	62A- 18	1	
	35-324204	15	1	
	35-324204	15	1	
	35-324204	61C- 6	1	
	35-324323-7	62A- 19	1	
	35-324365-9	61C- 16	2	
	35-344146	63 - 87	1	
	35-344147	63 - 89	1	
	35-344152	47C- 28	1	
	35-344152	63 - 83	1	
	35-344158	47C	1	
	35-344158	63 -	1	
	35-344169	47C- 27	1	
	35-361016	6 - 6	2	
	35-361016-1	6 - 7	1	
	35-361025	63	1	
	35-361109	62 - 3	1	
	35-361109	62A- 3	1	
	35-361132	36	1	
	35-361132-1	36 - 80	1	
	35-361132-1	36A- 81	1	
	35-361132-1	37 - 83	1	
	35-361133	37 - 85	1	
	35-361134	36 - 74	1	
	35-361134	36A- 76	1	
	35-361134	37 - 78	1	
	35-361135	36	1	
	35-361135	36A- 70	1	
	35-361135	37 - 72	1	
	35-361136	36 - 73	1	
	35-361136	36A- 75	1	
	35-361136	37 - 77	1	
	35-361139	36 - 82	1	
	35-361139	36A- 83	1	
	35-361145	36 - 84	1	

PART NUMBER	FIGURE AND INDEX NO.	QTY. PER ARTICLE
35-361145	36A- 85	1
35-361145	37 - 66	1
35-361150	36 - 75	1
35-361150	36A- 77	1
35-361150	37 - 79	1
35-361153	36 - 79	1
35-361153	36A- 80	1
35-361153	37 - 82	1
35-364022	47C- 57	1
35-364022	63 - 91	1
35-364050	61	1
35-364123-1	63	1
35-364126	63 - 42A	1
35-364127	38 - 2	1
35-364130	38 - 3	1
35-364137	63 - 43	1
35-364151-1	25A- 20	1
35-364151-11	25A- 5	2
35-364151-13	25A- 6	2
35-364151-15	25A	2
35-364151-17	25A- 33	1
35-364151-21	25A- 11	2
35-364151-23	25A- 37	1
35-364151-25	25 - 18	2
35-364151-25	25A- 7	2
35-364151-27	25A- 39	2
35-364151-29	25A- 13	1
35-364151-3	25 - 16	1
35-364151-3	25A- 2	1
35-364151-31	25A- 30	1
35-364151-33	25A- 23	1
35-364151-35	25A- 21	1
35-364151-41	25A- 10	2
35-364151-43	25A- 14	1
35-364151-45	25A- 24	1
35-364151-47	25A- 32	1
35-364151-49	25A- 35	1
35-364151-5	25A- 38	1
35-364151-51	25A	1
35-364151-57	23	1
35-364151-57	25A-	1
35-364151-7	25A	1
35-364151-9	25A- 28	1
35-364238	63 - 44	4
35-364247	63 - 41	4
35-380004-1	14 - 2G	1
35-380004-1	61 - 32	REF
35-380004-5	14A-107	1
35-380013	14 - 17	2
35-380014	14 - 34	2
35-380015	14	1
35-380016	14 - 36	1
35-380019	11	1
35-380019-1	11 - 8	1
35-380020-1	36A- 21	2
35-380020-1	37 - 49	2
35-380020-3	41A- 23	1
35-380029-1	61C- 35	1
35-380037-1	61C- 32	1
35-380039	61A- 8	1
35-380039	61B- 20	1
35-380043-1	61C- 31	1
35-380044-1	61C- 36	1
35-380052	63	3
35-380053-9	63	1
35-380055-1	58A- 89	1
35-380055-3	58A- 90	2
35-380055-7	63	2
35-380060-11	60	1
35-380060-9	60 - 5	1

PART NUMBER	FIGURE AND INDEX NO.	QTY. PER ARTICLE
35-400008	10 - 5	1
35-400010-32	10 - 2	1
35-400010-34	10 - 9	1
35-400010-36	10 - 7	1
35-400010-42	10	1
35-400010-56	4	1
35-400010-56	3 - 56	1
35-400010-56	4 - 38	1
35-400010-56	4A- 35	1
35-400010-6	10	1
35-400013	10 - 16	1
35-400014	10	1
35-400018	10 - 4	1
35-400031	10 - 17	1
35-400032	10 - 11	1
35-400033	10 - 18	1
35-400041	10 - 87	1
35-400044	10 - 21	1
35-400213	8 - 71	1
35-400298	11	4
35-400320-32	10 - 22	1
35-400320-36	10	1
35-400320-54	10 - 91	1
35-400320-56	10 - 92	1
35-400395	10 - 77	1
35-400404	10 - 14	1
35-400414	10 - 89	1
35-400417	10 - 85	1
35-400434	10 - 73	1
35-400435	10 - 75	1
35-400461	10 - 84	1
35-400462	10 - 80	1
35-400464-4	10 - 79	1
35-400464-6	10	1
35-400464-8	10	1
35-400465	10 - 71	1
35-400467-3	10 - 72	1
35-400472	10	1
35-410000-92	11 - 55	1
35-410000-93	11	1
35-410000-94	4	1
35-410000-94	3 - 7	1
35-410000-94	3 - 35	1
35-410000-94	4 - 14	1
35-410000-94	4 - 37	1
35-410000-94	11 - 53	1
35-410000-95	11	1
35-410000-96	11 - 56	1
35-410000-97	11	1
35-410000-98	11 - 54	1
35-410000-99	11	1
35-410038-124	8 - 53	1
35-410070-10	9 - 3	1
35-410070-12	9	1
35-410070-14	9 - 2	1
35-410070-2	9	1
35-410070-48	9 - 8	1
35-410070-606	9 - 1	1
35-410070-65	9	1
35-410070-67	9	1
35-410070-73	9	1
35-410070-75	9	2
35-410070-77	9 - 9A	1
35-410070-79	9	1
35-410077-12	45 - 10	2
35-410094-10	14A- 17	1
35-410152	8 - 55	1
35-410153	8 - 54	1
35-410154-1	8 - 47	1
35-410154-3	8 - 51	1

	PART NUMBER	FIGURE AND INDEX NO.	QTY. PER ARTI-CLE	
	35-410155	8 - 50	1	
	35-410156	8 - 52	1	
	35-410160-38	16 - 6	1	
	35-410169	6 - 3	2	
	35-410214	9	1	
	35-410214-5	9 - 7	1	
	35-410215-5	5	1	
	35-410215-5	5 - 4	1	
	35-410231	8 - 40	1	
	35-410241	16	1	
	35-410241-12	16 - 1	1	
	35-410242	16 - 4	2	
	35-410243	16 - 8	3	
	35-410244	16	1	
	35-410244-2	16 - 15	1	
	35-410245	16 - 7	1	
	35-410246	16 - 20	1	
	35-410247	16 - 12	4	
	35-410247	49	2	
	35-410248	16 - 14	1	
	35-410271	16 - 10	1	
	35-410286	6 - 2	2	
	35-410291	11	1	
	35-410291-108	11 - 6	1	
	35-410291-11	11	1	
	35-410291-112	11 - 26	1	
	35-410291-132	11	1	
	35-410291-136	11	1	
	35-410291-146	11	1	
	35-410291-147	11	1	
	35-410291-164	11	1	
	35-410291-165	11	1	
	35-410291-170	11	1	
	35-410291-175	11 - 29	1	
	35-410291-18	11 - 33	2	
	35-410291-44	11 - 3	1	
	35-410291-46	11 - 5	1	
	35-410291-52	11 - 32	2	
	35-410291-602	11 - 27	1	
	35-410291-626	11	1	
	35-410291-628	11	1	
	35-410291-72	11 - 51	1	
	35-410291-73	11	1	
	35-410291-76	11 - 29	1	
	35-410291-8	11 - 1	1	
	35-410291-80	11 - 11	1	
	35-410291-81	11	1	
	35-410291-88	11 - 15	1	
	35-410291-90	11 - 25	1	
	35-410291-98	11 - 35	1	
	35-410315	10 - 94	16	
	35-410315	11 - 13	7	
	35-410315	11 - 31	19	
	35-410316	11 - 43	1	
	35-410316-1	11	1	
	35-410317	11 - 46	2	
	35-410318	11 - 16	1	
	35-410323	11 - 45	1	
	35-410324	11 - 17	1	
	35-410325	11 - 21	1	
	35-410326	11 - 28	1	
	35-410329	11 - 52	1	
	35-410432	9 - 4	1	
	35-410434	16 - 29	1	
	35-410452-3	4	1	
	35-410452-3	3 - 32	1	
	35-410452-3	4 - 34	1	
	35-410452-3	4A- 33	1	
	35-410452-43	4	1	
	35-410452-43	3 - 49	1	

	PART NUMBER	FIGURE AND INDEX NO.	QTY. PER ARTI-CLE	
	35-410452-45	4	1	
	35-410452-45	3 - 50	1	
	35-410452-73	4	1	
	35-410452-73	3 - 5	1	
	35-410452-73	4 - 12	1	
	35-410452-73	4A- 19	1	
	35-410452-75	4	1	
	35-410452-75	3 - 6	1	
	35-410452-75	4 - 13	1	
	35-410452-75	4A- 20	1	
	35-410452-9	4	1	
	35-410452-9	3 - 34	1	
	35-410452-9	4 - 36	1	
	35-410452-9	4A- 36	1	
	35-410456	10	1	
	35-410456-1	10	1	
	35-410456-11	10 - 51	1	
	35-410456-13	10 - 68	1	
	35-410456-17	10 - 53	1	
	35-410456-17	10 - 57	1	
	35-410456-19	10	1	
	35-410456-21	10 - 48	1	
	35-410456-27	10 - 62	1	
	35-410456-29	10 - 66	1	
	35-410456-3	10 - 42	1	
	35-410456-31	10 - 46	1	
	35-410456-5	10 - 59	1	
	35-410456-7	10 - 56	1	
	35-410457	6 - 26	1	
	35-415309-1	11 - 42	1	
	35-415309-2	11	1	
	35-415310-1	11 - 48	1	
	35-415310-2	11	1	
	35-415311	11 - 49	1	
	35-415312-3	11 - 37	1	
	35-415312-4	11	1	
	35-415380-22	14A- 98	1	
	35-415380-22	14C- 88	1	
	35-424125-2	58 - 11	1	
	35-430005-12	3 - 38	1	
	35-430005-54	3 - 37	1	
	35-430005-58	3 - 36	1	
	35-521152	31	2	
	35-521152-4	31 - 40	2	
	35-521158	31	1	
	35-521158-1	31	1	
	35-521158-2	31 - 47	1	
	35-521158-3	31	1	
	35-521186	31 - 52	2	
	35-521187	31 - 39	2	
	35-521190	31 - 51	2	
	35-521213	24 - 1	2	
	35-521215-1	24 - 12	2	
	35-521227	25 - 4	1	
	35-521227	25A- 29	1	
	35-521229	24 - 3	2	
	35-521230	24 - 6	7	
	35-521230-2	24 - 5	2	
	35-524003	32 - 9	1	
	35-524011	35 - 14	2	
	35-524028	58 - 49	1	
	35-524028	58 - 71	1	
	35-524028	58 - 84	1	
	35-524028	58A- 77	1	
	35-524038	59 - 14	1	
	35-524047	59 - 11	2	
	35-524048	60 - 12	1	
	35-524048	60	2	
	35-524049-2	60	1	
	35-524049-4	60 - 8	1	

	PART NUMBER	FIGURE AND INDEX NO.	QTY. PER ARTI-CLE	
	35-524049-4	60	1	
	35-524051	60 - 16	1	
	35-524060	35	2	
	35-524060-1	35	2	
	35-524060-2	35 - 18	2	
	35-524060-3	35	2	
	35-524066	35	4	
	35-524066-2	35 - 12	4	
	35-524087-6	60 - 1	1	
	35-524087-8	60	1	
	35-524095	60 - 13	1	
	35-524096	60 - 15	1	
	35-524125	58	1	
	35-524125	58A- 79	1	
	35-524125	61C- 39	1	
	35-524136	35 - 9	1	
	35-524136	35 - 49	1	
	35-524137	35	1	
	35-524137-2	35 - 5	1	
	35-524138	35	1	
	35-524138-2	35 - 6	1	
	35-524139	60	2	
	35-524139	60	4	
	35-524140-2	60 - 17	2	
	35-524140-4	60 - 18	2	
	35-524141	60 - 20	2	
	35-524141	60	4	
	35-524143-2	35	1	
	35-524143-6	35 - 30	1	
	35-524144	35 -	1	
	35-524144-8	35 - 2	1	
	35-524170	35 -	2	
	35-524170-1	35	2	
	35-524170-2	35 - 26	2	
	35-524170-3	35 - 27	2	
	35-524171	35 - 29	2	
	35-524175	31 - 34	2	
	35-524183	35	2	
	35-524183-2	35 - 37	2	
	35-524197	58	1	
	35-524197-2	58 - 14	1	
	35-524230	59	1	
	35-524230-2	59 - 3A	3	
	35-524231	59 - 1	1	
	35-524238-12	60 - 23	1	
	35-524238-4	60	1	
	35-524240	59 - 7	6	
	35-524241	60 - 4	1	
	35-524241	60	1	
	35-524258	35 - 3	2	
	35-524261	60	1	
	35-524261-12	60	1	
	35-524261-14	60	1	
	35-524261-4	60	1	
	35-524262	60	1	
	35-524264	58 - 13	3	
	35-524269	59 - 8	3	
	35-524274	59	1	
	35-524274-4	59 - 4	1	
	35-524275	35 - 35	8	
	35-524275-1	35 - 36	4	
	35-524300	35 - 22	1	
	35-524301	35 - 21	1	
	35-524308	35 - 48	4	
	35-524309	31 - 5A	1	
	35-524314-10	31 - 32	1	
	35-524321	33 - 5	2	
	35-524349	59 - 10B	1	
	35-524367	35	1	
	35-524367-1	35	1	

	PART NUMBER	FIGURE AND INDEX NO.	QTY. PER ARTI-CLE	
	35-524367-2	35 - 43	1	
	35-524367-3	35	1	
	35-524368	35	1	
	35-524368-2	35	1	
	35-524553	58 - 94	2	
	35-524553	58A-107	1	
	35-524554	58 - 96	1	
	35-524554	58A-108	1	
	35-524576	60	2	
	35-524584	58 - 67	1	
	35-524584	58A- 74	1	
	35-524587	60 - 21	1	
	35-524587	60	1	
	35-524587-2	60	1	
	35-524591-2	60 - 7	2	
	35-524591-58	60	1	
	35-524591-60	60	1	
	35-524639	60 - 9	1	
	35-524641	35 - 16	2	
	35-534052	14 - 52	1	
	35-534052	14A-114	1	
	35-534052	14B- 78	1	
	35-534052	14C- 61	1	
	35-534057-8	11 - 41	2	
	35-534061	11 - 38	2	
	35-534063	11 - 44	2	
	35-534064	11 - 40	2	
	35-534067	14 -	1	
	35-534067-2	14	1	
	35-534079-14	14B- 98	2	
	35-534079-2	14B- 99	2	
	35-534079-24	14A-104	2	
	35-534079-24	14B	2	
	35-534090-16	14B-101	1	
	35-534090-17	14B-102	1	
	35-534090-2	14B-100	1	
	35-534090-26	14A-106	2	
	35-534090-26	14B	1	
	35-534157	13 - 5	16	
	35-534191-11	14A- 65	1	
	35-534201-2	14A- 7	1	
	35-534201-2	14B- 60	1	
	35-534201-3	14A- 33	1	
	35-534201-3	14B- 27	1	
	35-534202-2	14A- 9	1	
	35-534202-2	14B- 61	1	
	35-534202-3	14A- 31	1	
	35-534202-3	14B- 26	1	
	35-534213	13 - 2	3	
	35-534213	13A- 2	3	
	35-534220	14C	1	
	35-534220-27	14 - 73	2	
	35-534220-27	14A-125	2	
	35-534220-27	14B-116	2	
	35-534220-27	14C- 99	2	
	35-534221	14C	1	
	35-534221-15	14 - 72	1	
	35-534221-15	14A-124	1	
	35-534221-15	14B-115	1	
	35-534221-15	14C-100	1	
	35-534222	14C	1	
	35-534222-15	14 - 74	1	
	35-534222-15	14A-126	1	
	35-534222-15	14B-117	1	
	35-534222-19	14C-101	1	
	35-534242	14 - 29	4	
	35-534242	14A- 18	5	
	35-534242	14A- 45	1	
	35-534242	14B- 11	5	
	35-534243	14	1	

	PART NUMBER	FIGURE AND INDEX NO.	QTY. PER ARTI-CLE	
	35-534243-1	14 - 67	1	
	35-534243-1	14A-121	1	
	35-534243-25	14A-120	1	
	35-534243-27	14A	1	
	35-534243-3	14 - 68	1	
	35-534244	14B- 69	1	
	35-534295	14	1	
	35-534295-1	14	1	
	35-534295-2	14	1	
	35-534295-3	14 - 39	1	
	35-534295-3	14A- 88	1	
	35-534295-5	14 - 37	1	
	35-534295-6	14 - 38	1	
	35-534300-112	14B- 25	1	
	35-534300-238	14 - 53A	1	
	35-534300-238	14A- 49	1	
	35-534300-308	14A- 63	1	
	35-534304-101	14 - 49	1	
	35-534304-103	14 - 50	1	
	35-534304-113	14 - 32	1	
	35-534304-121	14 - 55	1	
	35-534304-125	14- 6	1	
	35-534304-127	12A	1	
	35-534304-127	13A- 45	1	
	35-534304-127	14 - 4	1	
	35-534304-128	14 - 5	1	
	35-534304-139	14 - 12	1	
	35-534304-139	14A	2	
	35-534304-139	14B-	2	
	35-534304-141	14 - 14	1	
	35-534304-141	14A	2	
	35-534304-141	14B	1	
	35-534304-143	14 - 46	1	
	35-534304-147	14A	1	
	35-534304-149	14 - 18	4	
	35-534304-15	14 - 16	2	
	35-534304-53	14 - 33	1	
	35-534304-57	14 - 47	1	
	35-534304-642	14	1	
	35-534304-643	14	1	
	35-534304-79	14A- 95	1	
	35-534304-83	14 - 43	1	
	35-534304-93	14 - 56	1	
	35-534304-93	14A	1	
	35-534304-93	14B- 79	1	
	35-534304-93	14C- 39	1	
	35-534304-95	14 - 45	1	
	35-534304-97	14 - 9	1	
	35-534304-99	14 - 44	1	
	35-534305-13	14A- 12	1	
	35-534305-13	14A- 41	1	
	35-534305-21	14 - 57	1	
	35-534305-35	14A- 39	1	
	35-534305-39	14B- 95	1	
	35-534305-39	14C- 56	1	
	35-534305-41	14A- 40	1	
	35-534305-55	14A-102	8	
	35-534305-55	14B	4	
	35-534305-55	14C- 58	8	
	35-534305-56	14C	8	
	35-534305-63	14 - 48	1	
	35-534305-65	14A	8	
	35-534305-65	14B- 97	4	
	35-534305-9	14A- 11	1	
	35-534306-15	14	2	
	35-534306-17	14	2	
	35-534306-25	14 - 20	1	
	35-534306-31	14 - 54C	1	
	35-534306-31	14A- 99	1	
	35-534306-31	14B- 80	1	

	PART NUMBER	FIGURE AND INDEX NO.	QTY. PER ARTI-CLE	
	35-534306-9	14	1	
	35-534307-17	14	1	
	35-534307-18	14	1	
	35-534307-21	14	2	
	35-534307-23	14	2	
	35-534307-27	14	1	
	35-534307-43	14	2	
	35-534307-45	14	2	
	35-534307-49	14	1	
	35-534307-51	14	1	
	35-534307-53	14	2	
	35-534307-53	14	2	
	35-534307-57	14	1	
	35-534307-61	14	1	
	35-534307-63	14	1	
	35-534307-67	14 - 46A	1	
	35-534307-7	14	2	
	35-534308-13	14A	1	
	35-534309-17	14B- 92	1	
	35-534309-17	14C- 82	1	
	35-534313-5	14	1	
	35-534313-7	14	1	
	35-534313-9	14	1	
	35-534315	6 - 24	1	
	35-534315	14 - 10	1	
	35-534334-3	12	1	
	35-534334-4	12 - 13	1	
	35-534335-3	12	1	
	35-534335-4	12 - 12	1	
	35-534338	13	4	
	35-534340-11	14 - 35	1	
	35-534340-15	14	4	
	35-534340-15	14A-115	4	
	35-534360	13	1	
	35-534360-1	13 - 1	1	
	35-534360-601	13 -	1	
	35-534360-607	13	1	
	35-534360-71	13 - 12	1	
	35-534360-72	13	1	
	35-534360-73	13 - 4	1	
	35-534360-79	12A	1	
	35-534360-79	13 - 21	2	
	35-534360-79	13A- 46	1	
	35-534360-81	13 - 6	1	
	35-534361-32	12 - 24	2	
	35-534361-38	12 - 27	4	
	35-534364-1	14	1	
	35-534364-10	14 - 54B	1	
	35-534364-10	14	1	
	35-534364-11	14 - 58D	1	
	35-534364-12	14 - 58F	1	
	35-534364-13	14	1	
	35-534364-15	14	1	
	35-534364-17	14	1	
	35-534364-2	14	1	
	35-534364-2	14	1	
	35-534364-3	14	1	
	35-534364-4	14	1	
	35-534364-5	14 - 58A	1	
	35-534364-6	14 - 54A	1	
	35-534364-6	14	1	
	35-534364-7	14 - 58C	1	
	35-534364-8	14 - 58E	1	
	35-534364-9	14 - 58B	1	
	35-534367	12 - 17	4	
	35-534368-2	12 - 3	4	
	35-534368-4	12 - 4	4	
	35-534369	12	1	
	35-534369-1	12 -	1	
	35-534369-2	12	1	

	PART NUMBER	FIGURE AND INDEX NO.	QTY. PER ARTI-CLE	
	35-534369-29	12 - 7	2	
	35-534369-3	12 - 5	2	
	35-534369-47	12 - 15	2	
	35-534369-48	12 - 16	2	
	35-534369-601	12	1	
	35-534369-602	12	1	
	35-534370-1	12	1	
	35-534370-2	12 - 11	1	
	35-534371-1	13 - 10	1	
	35-534372	14	1	
	35-534372-1	14 - 59	1	
	35-534372-25	13C- 50	1	
	35-534372-25	14	1	
	35-534372-3	14	1	
	35-534372-31	13C- 51	1	
	35-534372-31	14 - 61	1	
	35-534372-33	13C- 57	2	
	35-534372-33	14C	2	
	35-534372-35	14 - 60	1	
	35-534372-37	13C- 61	1	
	35-534372-37	14	1	
	35-534372-39	14	1	
	35-534372-41	13C- 54	2	
	35-534372-41	14 - 64	2	
	35-534372-43	14	1	
	35-534372-47	14	1	
	35-534372-49	13C- 53	1	
	35-534372-5	13C- 55	1	
	35-534372-5	14	1	
	35-534372-603	13C	1	
	35-534372-65	13C- 59	1	
	35-534372-65	14C- 65	1	
	35-534372-67	13C- 60	1	
	35-534372-67	14C- 66	1	
	35-534372-71	13C- 58	1	
	35-534372-71	14C- 64	1	
	35-534372-77	13C	1	
	35-534372-79	13C- 49	1	
	35-534372-81	13C- 52	1	
	35-534372-83	13C- 56	1	
	35-534372-83	14C- 63	1	
	35-534372-85	13C- 62	1	
	35-534372-85	14C- 68	1	
	35-534372-89	13C-	1	
	35-534372-89	14C- 62	1	
	35-534372-91	14C- 67	1	
	35-534374	14 - 27	2	
	35-534377	13A	1	
	35-534377-25	13A- 1	1	
	35-534377-27	13A- 19	1	
	35-534377-28	13A	1	
	35-534377-33	13A- 24	1	
	35-534377-35	13A	1	
	35-534377-45	12A	1	
	35-534377-45	13A- 23	1	
	35-534377-61	13A- 27	2	
	35-534377-71	13A	2	
	35-534378	13A	2	
	35-534378-15	13A- 17	2	
	35-534378-17	13A- 16	2	
	35-534378-19	13A- 14	2	
	35-534378-21	13A- 5	2	
	35-534378-23	13A- 8	2	
	35-534378-25	13A- 15	2	
	35-534378-27	13A- 10	2	
	35-534378-3	13A- 6	2	
	35-534378-9	13A- 9	2	
	35-534381	14	1	
	35-534381-1	14 - 70	2	
	35-534381-1	14	1	

	PART NUMBER	FIGURE AND INDEX NO.	QTY. PER ARTI-CLE	
	35-534381-11	14	1	
	35-534381-13	14	1	
	35-534381-5	14 - 71	1	
	35-534381-9	14	1	
	35-534382	14 -	2	
	35-534382	14A- 5	1	
	35-534382	14A- 14	1	
	35-534382	14A- 37	1	
	35-534382	14A- 43	1	
	35-534384	6	1	
	35-534384	9 - 12	1	
	35-534387-5	14A- 42	1	
	35-534388-11	14A- 25	1	
	35-534388-13	14A- 46	1	
	35-534388-15	14A- 47	1	
	35-534388-21	14A- 3	1	
	35-534388-23	14A- 4	1	
	35-534388-25	14A- 60	1	
	35-534388-27	14A- 62	1	
	35-534388-29	14A- 2	1	
	35-534388-31	14A- 21	1	
	35-534388-7	14A- 35	1	
	35-534388-9	14A- 36	1	
	35-534390-55	13C- 28	2	
	35-534394-27	14C- 75	1	
	35-534394-31	14C- 76	1	
	35-534394-33	14C- 77	1	
	35-534394-39	14C- 78	1	
	35-534394-650	14C- 70	1	
	35-534394-652	14C- 71	1	
	35-534394-654	14C- 72	1	
	35-534394-656	14C- 73	1	
	35-534394-658	14C- 74	1	
	35-534399	14C	1	
	35-534399-1	14C- 97	1	
	35-534406-87	14B- 34	1	
	35-534406-87	14C- 37	1	
	35-534409-1	14C-102	4	
	35-534409-5	14B-118	2	
	35-534412	14C	2	
	35-534412	14C- 23	2	
	35-550042	48 - 85	1	
	35-550042	48A- 92	1	
	35-550055	47C	1	
	35-550057	47C- 44	1	
	35-550058-2	47C- 49	1	
	35-550058-6	47C- 48	1	
	35-550059	47C- 41	1	
	35-550060	47C- 43	1	
	35-550061	47C- 42	1	
	35-550062	47C- 46	1	
	35-550062-2	47C	1	
	35-550063	47C- 47	1	
	35-550075	47C	1	
	35-550501-20	48A- 76	1	
	35-550520	10 - 82	2	
	35-550520	48A- 80	1	
	35-550520	54 - 5	2	
	35-550561-11	47C- 54	1	
	35-550561-13	47C- 29	1	
	35-550561-15	47C- 31	1	
	35-550561-29	47C- 53	4	
	35-550561-33	47C- 39	1	
	35-550561-35	47C- 36	1	
	35-550561-37	47C- 35	2	
	35-550561-39	47C	1	
	35-550561-43	47C- 56	2	
	35-550561-45	47C	1	
	35-550561-47	47C- 30	1	
	35-550561-49	47C- 55	1	

	PART NUMBER	FIGURE AND INDEX NO.	QTY. PER ARTI-CLE	
	35-550561-5	47C- 38	1	
	35-550561-607	47C	1	
	35-550561-611	47C	1	
	35-550561-9	47C- 26	1	
	35-550562-21	47C- 2	1	
	35-550562-33	47C-	1	
	35-550562-35	47C	1	
	35-550562-37	47C	1	
	35-550562-39	47C- 14	1	
	35-550562-41	47C- 21	1	
	35-550562-43	47C- 15	1	
	35-550562-51	47C- 9	1	
	35-550562-55	47C	1	
	35-550562-57	47C	1	
	35-550562-59	47C- 22	1	
	35-550562-607	47C	1	
	35-550562-61	47C- 18	1	
	35-550562-63	47C	1	
	35-550562-65	47C	1	
	35-550562-67	47C- 16	2	
	35-550562-85	47C- 4	1	
	35-550562-87	47C- 12	1	
	35-550562-87	47C- 20	1	
	35-550562-91	47C- 10	1	
	35-550562-97	47C- 1	1	
	35-574021	7	1	
	35-590006	7 - 1	1	
	35-590058	7 - 4	2	
	35-590070-1	7 -	2	
	35-590070-11	8 - 35	1	
	35-590070-23	9	1	
	35-590070-27	7	1	
	35-590070-29	7	1	
	35-590070-3	10 - 20	1	
	35-590070-7	9 - 6	1	
	35-590070-9	9	1	
	35-600003	27 - 6	2	
	35-600003	27 - 11	2	
	35-600003	28 - 38	2	
	35-650121	27	2	
	35-650121-2	27 - 4	4	
	35-650121-4	27	2	
	35-650121-6	27 - 7	2	
	35-650122-4	27 - 12	2	
	35-810072	36 - 55	2	
	35-810072	36A- 53	2	
	35-810075-1	39 - 42	1	
	35-810076	39 - 25	1	
	35-810077	39 - 27	2	
	35-810083	39 - 21	1	
	35-810087	39 - 18	1	
	35-810088	39 - 20	1	
	35-810091	39 - 31	1	
	35-810094	39	1	
	35-810094-2	39 - 3	1	
	35-810094-6	39 - 4	1	
	35-810095	39 - 6	1	
	35-810097	39 - 1	4	
	35-810117	39 - 24	1	
	35-810119	39 - 17	1	
	35-810122	38 - 23	2	
	35-810122	42 - 33	1	
	35-810132	23	2	
	35-810132	39	1	
	35-810132-2	23 - 14	2	
	35-810132-2	39 - 44	1	
	35-810133	23 - 15	2	
	35-810133	39 - 45	1	
	35-810134	39 - 9	2	
	35-810135	39 - 34	1	

	PART NUMBER	FIGURE AND INDEX NO.	QTY. PER ARTI-CLE	
	35-810136	39 - 30	1	
	35-810141	39 - 13	1	
	35-810141-3	39	1	
	35-810142	39 - 7	1	
	35-810143	39	1	
	35-810147	39 - 25A	1	
	35-810160	36A- 45	1	
	35-810161	36A	1	
	35-810165	37	1	
	35-810166	37 - 28	1	
	35-810167	39	1	
	35-810170	37	1	
	35-810171	37	1	
	35-815004	36	1	
	35-815004	36A- 50	1	
	35-815004	37 - 58	1	
	35-815004-1	36 - 52	1	
	35-815004-1	36A	1	
	35-815004-1	37	1	
	35-815006-12	46 - 1	1	
	35-815006-13	46 - 2	1	
	35-815006-24	46 - 20	2	
	35-815006-24	46 - 67	2	
	35-815006-8	46 - 31	1	
	35-815007-4	38 - 27	2	
	35-815016	40 -	2	
	35-815016-1	40	2	
	35-815016-2	40 - 9	2	
	35-815016-3	40	2	
	35-815020	39 - 14	1	
	35-815022	36A- 18	2	
	35-815022-1	37 - 8	2	
	35-815023	36 - 54	2	
	35-815023	36A- 52	2	
	35-815023	36A	4	
	35-815023	37 - 63	4	
	35-815037	46 - 19	1	
	35-815037	46 - 53	1	
	35-815038	36 - 65	2	
	35-815038	36A- 63	2	
	35-815043	36	1	
	35-815043	36A- 48	1	
	35-815044	36 - 50	1	
	35-815044	36A	1	
	35-815048	46 - 4	1	
	35-815055	40 -	1	
	35-815055-1	40	1	
	35-815055-10	40 - 15	1	
	35-815055-11	40	1	
	35-815055-12	40 - 16	1	
	35-815055-13	40	1	
	35-815055-56	40	1	
	35-815055-57	40	1	
	35-815055-601	40	1	
	35-815055-602	40	1	
	35-815055-62	40 - 18	2	
	35-815055-63	40	2	
	35-815055-64	40 - 14	1	
	35-815055-65	40	1	
	35-815055-68	40	2	
	35-815055-69	40	2	
	35-815056	40	4	
	35-815056-2	40 - 21	4	
	35-815056-4	40 - 23	4	
	35-815066	36 - 19	2	
	35-815069	46 - 25	1	
	35-815077	38	1	
	35-815077-1	38	1	
	35-815077-10	38 - 45	1	
	35-815077-11	38	1	

	PART NUMBER	FIGURE AND INDEX NO.	QTY. PER ARTI-CLE	
	35-815077-2	38 - 45	1	
	35-815077-3	38	1	
	35-815077-4	38 - 46	1	
	35-815077-5	38	1	
	35-815077-8	38	1	
	35-815077-9	38	1	
	35-815078	38 - 34	2	
	35-815081	36 - 36	2	
	35-815081	36A- 16	2	
	35-815081	37 - 9	2	
	35-815088-10	36	2	
	35-815088-16	36A- 26	2	
	35-815088-18	36A	2	
	35-815088-4	36 - 26	2	
	35-815088-4	36A- 25	2	
	35-815088-6	36 - 27	2	
	35-815095	46 - 26	1	
	35-815101-2	38 - 26	2	
	35-815102-20	38	1	
	35-815102-21	38	1	
	35-815109	38	2	
	35-815109	38 - 42	2	
	35-815115	38 - 48	2	
	35-815120	38 - 19	2	
	35-815123-10	38 - 18	2	
	35-815124	38 - 17	2	
	35-815125-12	38	1	
	35-815125-14	38	1	
	35-815125-2	38	1	
	35-815125-4	38	1	
	35-815125-602	38 - 7	1	
	35-815125-604	38	1	
	35-815129	38	2	
	35-815131	38 - 8	2	
	35-815146-2	58 -145	1	
	35-815147	58 -141	1	
	35-815147	58A- 97	1	
	35-815148-9	58 -140A	1	
	35-815155 SA2	38	1	
	35-815155 SA3	38	1	
	35-815155-2	38	1	
	35-815155-3	38	1	
	35-815155-610	38 - 20	1	
	35-815155-611	38	1	
	35-815155-611	38	1	
	35-815155-611	38	1	
	35-815155-611	38	2	
	35-815156	38 - 50	1	
	35-815156-1	38	1	
	35-815180	46	1	
	35-815180-2	46 - 38	1	
	35-815180-6	46 - 39	1	
	35-815182	36 - 4	4	
	35-815182	36A- 4	4	
	35-815184-9	58A-103	1	
	35-815192-1	36A	1	
	35-815192-13	36A- 7	2	
	35-815192-15	36A- 20	2	
	35-815192-15	37 - 11	2	
	35-815192-17	36A- 13	2	
	35-815192-19	36A- 14	2	
	35-815192-2	36A	1	
	35-815192-21	36A- 15	2	
	35-815192-23	36A- 6	2	
	35-815192-25	36A	1	
	35-815192-26	36A	1	
	35-815192-27	36A	2	
	35-815192-27	37	2	
	35-815192-29	36A- 19	2	
	35-815192-29	37 - 10	2	

	PART NUMBER	FIGURE AND INDEX NO.	QTY. PER ARTI-CLE	
	35-815192-3	36A	1	
	35-815192-33	37	1	
	35-815192-34	37	1	
	35-815192-35	37	1	
	35-815192-36	37	1	
	35-815192-37	36A	2	
	35-815192-39	36A	1	
	35-815192-4	36A	1	
	35-815192-40	36A	1	
	35-815192-41	36A	2	
	35-815192-45	37	1	
	35-815192-46	37	1	
	35-815192-47	37	1	
	35-815192-48	37	1	
	35-815192-5	36A	1	
	35-815192-6	36A	1	
	35-815192-7	36A	2	
	35-815192-9	36A	2	
	35-815194	36A	2	
	35-815194	37	2	
	35-815194-1	36A- 42	2	
	35-815194-1	37 - 37	2	
	35-815196-19	36A	1	
	35-815196-20	36A	1	
	35-815196-23	36A	1	
	35-815196-24	36A	1	
	35-815196-25	37 -	2	
	35-815196-3	36A	1	
	35-815196-4	36A	1	
	35-815196-603	36A	1	
	35-815196-604	36A	1	
	35-815196-612	36A-	1	
	35-815196-613	36A	1	
	35-815196-616	36A	1	
	35-815196-617	36A	1	
	35-815196-691	36A	1	
	35-815196-692	36A	1	
	35-815197-1	36A- 17	1	
	35-815197-1	37 - 7	1	
	35-815197-2	36A	1	
	35-815197-2	37	1	
	35-815197-3	37	1	
	35-815197-4	37	1	
	35-815246-1	37 - 12	1	
	35-815246-11	37 - 15	2	
	35-815246-3	37	1	
	35-815246-5	37	1	
	35-815246-7	37	1	
	35-815246-9	37 - 13	2	
	35-815247-15	37 - 26	4	
	35-815247-17	37	1	
	35-815247-18	37	1	
	35-815247-3	37 -	1	
	35-815247-4	37	1	
	35-815247-9	37 - 50	2	
	35-815249-1	37 - 52	2	
	35-815250	37 - 2A	4	
	35-815251-1	37	2	
	35-815251-3	37 - 22	2	
	35-815252-1	37 - 23	2	
	35-815252-3	37 - 24	2	
	35-815253	37 - 31	2	
	35-815254-7	37	2	
	35-815254-9	37	2	
	35-815256	37 - 19	4	
	35-820028	41 - 48	1	
	35-820028	41A- 38	1	
	35-820045	44 - 4	1	
	35-820094	42	1	
	35-820094-2	42 - 12	1	

	PART NUMBER	FIGURE AND INDEX NO.	QTY. PER ARTI-CLE	
	35-820094-4	42 - 13	1	
	35-820095	42 - 14	1	
	35-820107	41 -	2	
	35-820107	41A	1	
	35-820107-1	41 - 43	2	
	35-820107-3	41A- 33	1	
	35-820108	41 - 40	2	
	35-820108	41A- 31	1	
	35-820114-2	41 - 24A	1	
	35-820114-2	41A- 27A	1	
	35-820115	41 - 5	2	
	35-820122	41 - 29	1	
	35-820123	41 - 44	4	
	35-820123	41A- 34	2	
	35-820123	41A- 42	2	
	35-820125	41 - 33	1	
	35-820125	41A- 12	1	
	35-820130-2	41 - 24	1	
	35-820130-2	41A- 27	1	
	35-820130-4	41 - 27	2	
	35-820131-7	41 - 17	1	
	35-820132	41 - 41	2	
	35-820132	41A- 39	1	
	35-820133	41 - 18	1	
	35-820133	41A- 51	1	
	35-820134	41 - 32	1	
	35-820134	41A- 16	1	
	35-820135	41 - 6	2	
	35-825005	44 - 27	1	
	35-825006	44 - 24	1	
	35-825007	44 - 26	1	
	35-825031	41A- 20	1	
	35-825035	44 - 29	1	
	35-825044-4	44	1	
	35-825045	44 - 28	1	
	35-825046	44 - 30	1	
	35-825049	44 - 9	1	
	35-825051	44 - 10	1	
	35-825052	44	1	
	35-825052-2	44 - 7	1	
	35-825054	35 - 39	1	
	35-825054	44 - 1	REF	
	35-825074	42 - 39	1	
	35-825076-1	42 - 17	1	
	35-825094-4	42 - 19	1	
	35-825108	42 - 27	1	
	35-825111	42 - 44	1	
	35-825118	42 - 38	1	
	35-825119-1	42 - 36	2	
	35-825123	42 - 28	2	
	35-825128	41A	1	
	35-825128-2	41A- 50	1	
	35-825129	41 - 61	1	
	35-825145	41 - 51	1	
	35-825145	41A- 28	1	
	35-825145	43 -	1	
	35-825146	43 - 1	1	
	35-825147	43 - 5	1	
	35-825148	43 - 2	1	
	35-825151	43 - 7	2	
	35-825152	43 - 3	2	
	35-825160	44	1	
	35-825160 SA2	44	1	
	35-825161	44	1	
	35-825162	44 - 22	1	
	35-825163	44 - 16	1	
	35-825164	44 - 18	1	
	35-825165	44 - 15	1	
	35-825166	44 - 31	1	
	35-825170	44 - 34	1	

	PART NUMBER	FIGURE AND INDEX NO.	QTY. PER ARTI-CLE	
	35-825171-1	44 - 33	1	
	35-825172-2	39 - 38	1	
	35-825173	44 - 23	1	
	35-825175-12	41 - 56	1	
	35-825175-12	41A- 52	1	
	35-825175-6	41 - 56	1	
	35-825175-6	41A- 52	1	
	35-825185-12	42 - 2	1	
	35-825185-14	42 -	1	
	35-825188	42 - 20	1	
	35-825191-1	42	1	
	35-825191-3	42	1	
	35-825191-5	42 - 41	1	
	35-825191-7	42	1	
	35-825193	41A	1	
	35-825193-1	41A- 41	1	
	35-825195	41A	1	
	35-825195-11	41A- 48	1	
	35-825195-13	41A- 21	1	
	35-825195-15	41A	1	
	35-825195-21	41A	1	
	35-825195-23	41A- 19	1	
	35-825195-3	41A	1	
	35-825195-5	41A	1	
	35-825195-601	41A	1	
	35-825195-7	41A- 45	1	
	35-825195-9	41A- 46	1	
	35-825196-3	41A	1	
	35-825196-691	41A-	1	
	35-825197	41A- 6	1	
	35-910003-43	49 - 5	2	
	35-910003-43	49C- 78	8	
	35-910004-7	49	2	
	35-910057	52	1	
	35-910057	52A	1	
	35-910057-1	52	1	
	35-910057-1	52A	1	
	35-910288	53	2	
	35-919133	53A- 7	2	
	35-919138-1	53A- 5	2	
	35-919139	53A- 11	2	
	35-919146-4	53A- 8	2	
	35-919148-12	53A- 4	2	
	35-919148-18	53A- 3	2	
	35-919148-20	53A	2	
	35-919149-10	53A	2	
	35-919149-12	53A	2	
	35-919149-14	53A	2	
	35-919149-4	53A- 6	2	
	35-921154-100	57D	1	
	35-921154-101	57D- 56	2	
	35-921154-99	57D- 60	1	
	35-921241-1	6 - 14	4	
	35-921241-3	6	4	
	35-921502	57 - 29	4	
	35-921502	57D- 94	6	
	35-921503	57 - 5	4	
	35-921503	57 - 50	2	
	35-921503	57A- 39	2	
	35-921503	57A- 43	4	
	35-921503	66 - 12	1	
	35-921532	57	2	
	35-921533	57	2	
	35-924094	57	1	
	35-924095	57 - 60	1	
	35-924148	6 - 17	4	
	35-939178-1	49	1	
	35-939178-7	49 - 52	1	
	35-939180-1	49 - 22	2	
	35-944037	52A- 14	4	

	PART NUMBER	FIGURE AND INDEX NO.	QTY. PER ARTI-CLE	
	35-950126	49 - 3	2	
	35-950126	49C- 77	4	
	3515-14-05	53	8	
	3517-2	48B- 35	1	
	35175A	39	2	
	3519-12	57E- 3	2	
	35316	14 - 2J	1	
	3536-18	47 - 12	4	
	357004	63 - 63A	1	
	362842	49D	6	
	365533	49D	1	
	367-00	57	2	
	367-00	57A- 14	2	
	367386	49D	1	
	367418	49D	1	
	367421	49D	1	
	367545	49D	1	
	367546	49D	1	
	367547	49D	1	
	367631	49D	1	
	367639	49D	1	
	367653	49D	1	
	367694	49D	1	
	367695	49D	1	
	367725	49D	2	
	367757	49D	1	
	367949	49D	1	
	367962	49D	1	
	367970	49D	1	
	3686	44 - 21	1	
	37059	57E- 5	2	
	37117	57E- 7	2	
	3732065	15 - 13	2	
	37572	49K	4	
	37615-110	57E- 8	2	
	37615-339	57E- 6	2	
	37685-2	57E- 9	2	
	37690	57E- 12	2	
	37691	57E- 10	2	
	37693	57E- 11	2	
	37810-1	57E	2	
	37825	57E- 1	2	
	37826	57E	2	
	379-S-138	49D	3	
	379-S-21	49D	1	
	37904	57E- 4	2	
	38038	57E- 12	2	
	383493	49D	1	
	384583	49D	4	
	39A4240	66	2	
	399847	49D	1	
	4	18	22	
	4	18	26	
	4X10-1/4X33	7	1	
	40A50	48 - 12	2	
	40A50	48A- 12	2	
	40005-16	4A95-6	1	
	400433	49E- 24	2	
	40209-17	54	1	
	40209-5	54 - 1	1	
	40209-5	54 - 2A	1	
	40209-6	54	1	
	40209-6	54	1	
	40209-7	54 - 2	2	
	40209-7	54	1	
	4036-A	57A- 8	2	
	404-180074	46 - 40	1	
	408-0293-233	25 - 8	1	
	408-0293-233	25A- 19	1	
	4131049	15 - 14	2	

	PART NUMBER	FIGURE AND INDEX NO.	QTY. PER ARTI-CLE	
	414-181500-53	18 - 59	2	
	414-183389-1	12A	1	
	414-183389-1	13A	2	
	414-183389-3	12A	1	
	414-183389-3	13A	2	
	414-183389-5	12A	1	
	414-183389-5	13A	2	
	414-183761-5	61C- 26	2	
	414-183802-3	61C- 27	2	
	414-183950-123	48 - 26	1	
	414-183950-123	48A- 26	1	
	414-183950-125	48 - 25	1	
	414-183950-125	48A- 25	1	
	414-183950-135	48 - 27	1	
	414-183950-135	48A- 27	1	
	414-183955-111	48A- 77A	1	
	414-183963-9	48 - 6	1	
	414-183963-9	48A- 6	1	
	414-183963-9	48A-119	2	
	414-183976-15	48 - 56	1	
	414-183976-15	48A- 57	1	
	414-184040-1	8	2	
	414-184040-1	17 - 18	3	
	414-184040-1	51	6	
	414-184040-13	8	2	
	414-184040-13	51	6	
	414-184040-15	8 - 27	2	
	414-184040-17	8 - 30	2	
	414-184040-19	8	2	
	414-184040-19	17 - 17	3	
	414-184040-21	8 - 29	2	
	414-184040-3	8 - 26	2	
	414-184040-3	51 - 12	6	
	414-184040-5	51 - 13	6	
	414-184040-7	17 - 16	3	
	414-184040-9	8 - 28	2	
	414-189412	63 - 68	2	
	414-534010	60 - 10	1	
	414-920022-1	57D- 70	2	
	4140-00	57D- 26	2	
	4140-00-5	57A	2	
	4142-341G49	63 -121	2	
	416-50	57	2	
	416-52	57 - 21	2	
	416-53	57 - 24	2	
	416-54	57 - 12	2	
	416-55	57 - 19	6	
	416-56	57 - 15	2	
	416-59	57 - 18	6	
	416-60	57 - 16	6	
	416-61-6	57 - 11	2	
	416-85	57 - 9	2	
	416-85-25	57 - 10	2	
	416-85-31	57 - 9	2	
	417H2	48B- 25	2	
	4172355X126	11 - 26	1	
	4190	49	2	
	427-8	57 - 23	2	
	43C2-15K	66	1	
	437-7	48B	1	
	447A39	48B- 44	1	
	449-0003	25	2	
	449-0006	25	1	
	45-115018	63 - 53	2	
	45-115019	18 - 26	1	
	45-115019-1	18	1	
	45-115136	18	1	
	45-115136-1	18	1	
	45-115136-2	18 - 25	1	
	45-115136-3	18	1	

PART NUMBER	FIGURE AND INDEX NO.	QTY. PER ARTICLE
45-115136-4	18 - 22	2
45-115136-6	18 - 23	2
45-115136-8	18 - 24	2
45-135030-3	20	1
45-135030-7	20 - 8	1
45-135031-1	2	1
45-135031-43	20 - 9	1
45-135031-47	20 -	1
45-135031-55	21A- 16	2
45-135031-57	21A- 15	2
45-135031-75	2	1
45-135032	20 - 7	1
45-135032-3	3	1
45-135032-75	3	2
45-135033	20	1
45-135033-3	20 - 14	1
45-135034	31	1
45-135034-1	31 - 68	1
45-135035	20 - 2	1
45-135036	20 - 4	1
45-135037	27 - 43	2
45-135037	31 - 69	1
45-135038	20 - 15	1
45-135038	27 - 44	2
45-135038	28 - 31	2
45-135038	31 - 70	1
45-135039-1	20 - 11	1
45-210204-5	3 - 24	1
45-361115	63	1
45-361116	63 - 47	1
45-361117	63	1
45-361119-7	22A- 14	1
45-361219-3	36 - 67	1
45-361219-3	36A- 69	1
45-361235	41	1
45-361235	41A- 56	1
45-361235-9	41 - 54	1
45-364193	23 - 16	1
45-364193	25 -	1
45-364193-1	25 - 2	1
45-364193-3	25 - 3	1
45-364193-5	25 - 21	1
45-364238	36 - 72	2
45-364238	36A- 74	2
45-364238	37 - 76	2
45-410021-10	8	1
45-410021-11	8	1
45-410021-4	8 - 68	1
45-410021-5	8	1
45-410021-6	8 - 65	1
45-410021-7	8	1
45-410087	34 - 29	2
45-410204-5	4	1
45-440000-602	8 - 76	1
45-440000-602	17 - 1	1
45-440000-606	8	1
45-440000-606	17	1
45-521011	31 - 65	1
45-521100-3	31 - 63	1
45-521212 SA4	24 -	1
45-521212 SA5	24	1
45-521212-10	24	2
45-521212-12	24	2
45-521212-13	24	2
45-521212-14	23 - 1	1
45-521212-14	24	1
45-521212-15	23 - 2	1
45-521212-15	24	1
45-521212-2	24 - 10	2
45-521214	24 - 11	2

PART NUMBER	FIGURE AND INDEX NO.	QTY. PER ARTICLE
45-521214-1	24	2
45-521216	24 - 9	2
45-521216-1	24	2
45-524040	34	1
45-524040-2	34 - 2	1
45-524040-602	34 -	1
45-524538	58 - 68	1
45-524538	58A	1
45-524539	58 - 66	1
45-524539	58A- 73	1
45-524557-1	27 - 30	1
45-524557-1	31 - 56	1
45-524557-3	27	1
45-524560	31	1
45-524561-1	31 - 62	1
45-524561-3	27 - 39	2
45-524561-3	28 - 27	1
45-524562	27 - 38	2
45-524562	31 - 57	1
45-524563	27 - 32	2
45-524563	28 - 21	1
45-524563	31 - 55	1
45-524564	27 - 35	2
45-524564	28 - 23	1
45-524564	31 - 61	1
45-524565-3	27	1
45-524565-5	27	1
45-524566-1	31 - 54	1
45-524566-3	27 - 31	1
45-524566-5	27	1
45-524569	27 - 34	2
45-524569	28 - 22	1
45-524569	31 - 60	1
45-524572	32 - 15	2
45-524615-9	31	1
45-524624	31 - 79	4
45-524626	27	2
45-526005-1	27	1
45-526005-2	27	1
45-526005-3	27 - 20	2
45-526006-3	27 - 23	2
45-526006-5	27 -	2
45-526006-7	27 - 22	2
45-526007-1	27 - 25	2
45-526008	27 - 40	2
45-526009	27	2
45-526009-1	27 - 42	2
45-526011	27	2
45-526011	32 - 23	2
45-526011-1	27	2
45-526011-11	27 - 16	2
45-526011-13	27 - 15	2
45-526011-3	27	2
45-526011-3	33 - 23	2
45-526011-9	27	2
45-526011-9	32	2
45-526015	27 - 27	2
45-526015	28 - 16	1
45-590059	7 - 5	1
45-600011	26 - 9	AR
45-610005-2	29	1
45-610005-3	29	1
45-610005-36	29 - 13	1
45-610005-37	29	1
45-610005-4	4	1
45-610005-4	3 - 66	1
45-610005-4	4 - 66	1
45-610005-4	4A- 67	1
45-610005-40	29 - 15	2
45-610005-42	4	1

PART NUMBER	FIGURE AND INDEX NO.	QTY. PER ARTICLE
45-610005-42	3 - 70	1
45-610005-42	4 - 69	1
45-610005-42	4A- 70	1
45-610005-43	4	1
45-610005-43	3 - 69	1
45-610005-43	4 - 70	1
45-610005-43	4A- 69	1
45-610005-5	4	1
45-610005-5	3 - 67	1
45-610005-5	4 - 67	1
45-610005-5	4A- 68	1
45-610005-603	29	1
45-610005-604	29	1
45-620011-12	27 - 3	16
45-620011-2	28 - 2	4
45-620011-4	27 - 2	12
45-620011-4	28 - 3	8
45-620020	27 - 46	2
45-620020	28 - 33	1
45-620021	27 - 45	2
45-620021	28 - 32	1
45-630005-102	30 - 3	1
45-630005-112	4	1
45-630005-112	3 - 16	1
45-630005-112	4 - 17	1
45-630005-112	4A- 17	1
45-630005-113	4	1
45-630005-113	3 - 43	1
45-630005-113	4 - 47	1
45-630005-113	4A- 46	1
45-630005-122	30 - 4	1
45-630005-142	30 - 15	1
45-630005-150	30 -	1
45-630005-152	30 - 10	1
45-630005-52	30 - 13	1
45-630012-2	30 - 11	1
45-630012-4	30 - 12	1
45-630012-6	29 - 10	2
45-630012-8	29 - 11	2
45-640005-39	28 - 7	2
45-640005-45	28	1
45-640005-47	28	1
45-640005-49	4	1
45-640005-49	3 - 42	1
45-640005-51	4	1
45-640005-51	3 - 15	1
45-640010	28 - 35	1
45-640011	28 - 36	1
45-650005-41	28 - 4	1
45-660011	29 - 12	2
45-660012-1	4	2
45-660012-1	3 - 68	2
45-660012-1	4 - 68	1
45-660012-1	4A- 72	2
45-660012-1	29 - 5	2
45-660013	29	2
45-660013-2	29 - 9	2
45-660041	29 - 14	2
45-810090	39 - 40	1
45-810144	39 - 27A	1
45-815003-1	38	1
45-815003-3	38 - 24	1
45-815005-1	40 - 6	2
45-815005-2	40	2
45-815011-10	37	2
45-815011-4	36 - 41	2
45-815011-4	36A- 37	2
45-815011-6	36	2
45-815011-6	36A	2
45-815011-8	37 - 32	2

PART NUMBER	FIGURE AND INDEX NO.	QTY. PER ARTICLE
45-815013	36 - 43	4
45-815013	36A- 38	4
45-815013	36A- 43	4
45-815013	37 - 33	4
45-815013	37 - 38	4
45-815014	36 - 40A	2
45-815015-4	36 - 42	2
45-815015-6	36	2
45-815091	38 - 11	2
45-815116	38 - 31	2
45-815201-2	36 - 49	2
45-815201-2	36A- 47	2
45-815213-2	36 - 7	2
45-815215	36	2
45-815215	36A	2
45-815215-2	36 - 9	2
45-815215-2	36A- 8	2
45-815215-4	36 - 10	2
45-815215-4	36A- 9	2
45-815220	36 - 16	2
45-815222-2	36 - 17	2
45-815222-4	36	2
45-815223-4	36 - 18	2
45-815224	36 - 22	2
45-815225	36 - 25	2
45-815230	36 - 11	2
45-815230	36A- 10	2
45-815231	36 - 12	2
45-815231	36A- 11	2
45-815232	36 - 35	2
45-815232	36A- 32	2
45-815237	36 - 38	2
45-815237	36A- 33	2
45-815237	36A- 40	2
45-815237	37 - 29	2
45-815237	37 - 35	2
45-824009-3	42 - 35	1
45-824011	42 - 37	1
45-824012	41 - 36	1
45-824014	42 - 21	1
45-825001-3	41 - 65	1
45-825011	41 - 2	2
45-825011	41A- 2	2
45-825031	41 - 12	1
45-825032	41 - 21	1
45-825032	41A- 25	1
45-825033	41 - 30	1
45-825033	41A- 7	1
45-825034	41 - 31	2
45-825034	41A- 8	2
45-825078-1	42 - 45	2
45-825080	42 - 31	1
45-825080-11	42	1
45-825084	42 - 30	1
45-910162-3	51	8
45-910163-3	51	8
45-910186-3	51	8
45-921541	57 - 41	2
45-921541	57A- 32	4
45-921541	57D- 3	2
45-921544	57 - 26	2
45-939120	49 - 45	2
45-939120	49C- 34	2
45-939120	49C- 44	2
45A28	48C- 13	9
45C40	48C- 1	1
450273	39 - 23	2
4523	63 - 52	2
4524	63 - 62	1
455-28	10	1

	PART NUMBER	FIGURE AND INDEX NO.	QTY. PER ARTI-CLE	
	4553	63 - 52	2	
	455613	49J	4	
	456-0010-006	25 - 18	2	
	4570	63 -113	1	
	4596	17 - 12	1	
	46014476	14B- 62	1	
	4601746	14C- 69	1	
	461	48B- 31	1	
	462A	48B- 36	1	
	47	8	1	
	475126	48D- D	2	
	475594	48D- J	2	
	475634	48D- G	2	
	476285	48D- C	2	
	476364	48D- E	2	
	476411	57 -104	2	
	476439	48 - 61	1	
	476439	48	2	
	476439	48A- 62	2	
	476439	48D-	2	
	476439	65 - 15	1	
	476439	66 - 23	1	
	476474	48D- B	2	
	476563	48D- H	2	
	477987	48D	2	
	48152	61C- 38	3	
	48154	58A- 96	4	
	490028	48D- F	6	
	49158	63 -117	2	
	49196	63 - 6	20	
	49245	63 - 5	20	
	493A1	48B- 39	AR	
	49384	18 - 30	4	
	49384	21 - 8	1	
	49384	21A	4	
	49384	22 - 10	4	
	49384	22A	4	
	5	15	2	
	5	15	2	
	5	61C- 7	1	
	5.00 X 5	41A- 62	1	
	5.00X5	41 - 63	1	
	5.00X5	41 - 64	1	
	5.00X5	41	1	
	5D1048	67 - 58	1	
	50-105011	18 - 9E	2	
	50-110002-178	18 - 43	2	
	50-110010-104	18 - 18	1	
	50-110010-105	18	1	
	50-110010-106	18 - 20	2	
	50-110010-18	19 - 62	1	
	50-110010-19	19	1	
	50-110010-20	19 - 63	1	
	50-110010-21	19	1	
	50-110010-28	19 - 64	1	
	50-110010-29	19	1	
	50-110010-30	19 - 65	1	
	50-110010-31	19	1	
	50-110010-50	19A- 65	1	
	50-110010-51	19A	1	
	50-110010-52	19A- 66	1	
	50-110010-53	19A	1	
	50-110010-54	19A- 66A	1	
	50-110010-55	19A	1	
	50-110025-44	18 - 39	1	
	50-110074-5	18 - 36	1	
	50-110074-6	18	1	
	50-115034	19 - 53	1	
	50-115034-1	19	1	
	50-160012-1	22A- 8	1	

	PART NUMBER	FIGURE AND INDEX NO.	QTY. PER ARTI-CLE	
	50-160012-2	22A	1	
	50-160013-1	22A- 9	1	
	50-160013-2	22A	1	
	50-295158-26	58 - 18C	1	
	50-320024	58 - 21	1	
	50-320024	58A- 4	1	
	50-320029	58 - 37	1	
	50-320030	58A- 82	1	
	50-320030-2	58	1	
	50-320031-2	58	1	
	50-320031-2	58A- 81	1	
	50-320032	58 - 88	1	
	50-320032	58 -100	1	
	50-320032	58 -114	1	
	50-320032	58A-114	1	
	50-320033	58A-116	1	
	50-320034	58 -115	1	
	50-320034	58A- 65	1	
	50-320038	58 -107	1	
	50-320046	58 -116	1	
	50-320046	58A	1	
	50-320091	58 - 23	1	
	50-320091	58A- 5	1	
	50-320092	58 - 18B	1	
	50-320092	58A	1	
	50-320092-2	58A- 16	1	
	50-320092-4	58A- 18	1	
	50-320093-10	58	1	
	50-320093-10	58A- 20	1	
	50-320093-6	58	1	
	50-320093-6	58A- 19	1	
	50-320137	58 - 5	1	
	50-320137	58 - 38	1	
	50-320148	58	1	
	50-320148	58A- 23A	REF	
	50-320148	61C- 40	1	
	50-320148-2	58 - 33	1	
	50-320242	58 -112	1	
	50-320242	58A- 83	1	
	50-320243-17	58	1	
	50-320243-604	58 - 8	1	
	50-324026-602	58	1	
	50-324076-13	15 - 15	2	
	50-324103-1	61C- 33	1	
	50-324103-1	61C- 47	3	
	50-324104	61C- 12	1	
	50-364108	58 -155	2	
	50-364108	58A- 29	2	
	50-364129	58 -156	2	
	50-364129	58A- 26	2	
	50-364172-5	63 -110	2	
	50-364172-9	63 -111	1	
	50-364212	63 -112	1	
	50-364253-7	17 - 13	1	
	50-364253-9	17 - 14	1	
	50-369050	66 - 11	1	
	50-380006-1	61 - 29	1	
	50-380011-19	61C- 17	1	
	50-380013-5	14A-107	1	
	50-380013-5	61C- 29	1	
	50-380024	61B- 22	1	
	50-380024	61C- 34	1	
	50-380027	67 - 86	1	
	50-384001-31	61B- 7	1	
	50-384001-31	66 - 49	1	
	50-384015	61 - 36	1	
	50-384024-17	61C- 30	1	
	50-384040	62 - 1	1	
	50-384040	62A- 1	1	
	50-384042-3	61C- 9	1	

	PART NUMBER	FIGURE AND INDEX NO.	QTY. PER ARTI-CLE	
	50-384046	64 - 16	1	
	50-389002	57 - 70	2	
	50-389002-1	57	1	
	50-389002-3	57	1	
	50-389012-9	54	1	
	50-400165	17 - 5	1	
	50-400166	17 - 7	1	
	50-400166-6	17	1	
	50-400205	17 - 8	1	
	50-400205-1	17	1	
	50-400335-1	10	1	
	50-400336-1	10	1	
	50-400356	10	1	
	50-400356-1	10 - 27	1	
	50-400356-13	10 - 36	1	
	50-400356-15	10 - 38	1	
	50-400356-19	10	1	
	50-400356-3	10 - 26	1	
	50-400356-7	10 - 30	1	
	50-400357-3	10 - 41	1	
	50-400357-5	10 - 39	1	
	50-400365-5	10 - 33	1	
	50-524010-2	59	1	
	50-524038	58 - 59	1	
	50-524038	58A- 78	1	
	50-524039-267	58 - 41	1	
	50-524040	58 - 51	1	
	50-524041	58 - 53	1	
	50-524042-2	58 - 57	1	
	50-524042-2	58A- 67	1	
	50-524042-8	58 - 56	1	
	50-524042-8	58A- 66	1	
	50-524043-10	58 - 62	1	
	50-524043-10	58A- 70	1	
	50-524045-2	58 - 90	1	
	50-524045-2	58A-104	1	
	50-524045-8	58 - 92	1	
	50-524045-8	58A-106	1	
	50-524047	58 - 47	1	
	50-524047	58 - 69	1	
	50-524047	58 - 82	1	
	50-524047	58A- 75	1	
	50-524097	58 - 48	1	
	50-524123-2	58 - 50	1	
	50-524124	58 - 35	1	
	50-524138	58 - 64	1	
	50-524138	58 - 85	1	
	50-524138	58A- 72	1	
	50-524138	58A-112	1	
	50-524196	58 - 98	1	
	50-524197	58 - 75	1	
	50-524198	58A-115	1	
	50-524200-4	58 - 79	1	
	50-524200-4	58A-110	1	
	50-524201	58 - 87	1	
	50-524210	58 -110	1	
	50-524210-1	58	1	
	50-524223-1	58 - 74	1	
	50-524223-3	58 -128	1	
	50-524223-3	58A- 91	1	
	50-524305	58 -104	2	
	50-524348	60 - 11A	2	
	50-534041-29	13C- 36	4	
	50-534041-9	13C- 37	4	
	50-534070	13 - 14	2	
	50-534073-1	13C- 64	1	
	50-534073-1	14 - 65	1	
	50-534269	13 - 22	2	
	50-534269-13	12 - 29	2	
	50-534269-23	12	4	

	PART NUMBER	FIGURE AND INDEX NO.	QTY. PER ARTI-CLE	
	50-534269-23	13	4	
	50-534269-615	13	1	
	50-534363	64 - 40	2	
	50-534363	64 - 48	1	
	50-534430	13C- 14	4	
	50-534430	13C- 27	4	
	50-554100	48A-125	4	
	50-554106	48 - 1	1	
	50-554106	48A- 1	1	
	50-554106	48A-118	1	
	50-555018	48 - 16	1	
	50-555018	48A- 16	1	
	50-555019	48 - 18	1	
	50-555019	48A- 18	1	
	50-560012	64 - 41	2	
	50-560012	64 - 49	1	
	50-560015	64 - 9	1	
	50-590011	7 - 15	1	
	50-590013	7 - 18	1	
	50-590014	7 - 11	1	
	50-590106	7 - 8	1	
	50-910148-71	51	8	
	50-920008-10	57A	1	
	50-920008-10	57D	1	
	50-920008-7	57	1	
	50-920008-8	57 - 47	1	
	50-920008-9	57A- 1	1	
	50-920008-9	57D- 1	1	
	50-920030-4	57 - 69	2	
	50-920030-4	57B- 17	1	
	50-920064	57	2	
	50-920064	57A- 33	2	
	50-920064	57D- 47	2	
	50-920065	57	1	
	50-920065-1	57	1	
	50-920071	57 - 48	2	
	50-921518	57	2	
	50-921520	57 - 7	4	
	50-921520	57A- 46	4	
	50-921521	57 - 6	4	
	50-921521	57A- 48	4	
	50-944036-11	58 - 27	4	
	50-944036-11	58A- 10	4	
	50-944036-13	58 - 26	2	
	50-944036-13	58A- 9	2	
	50-944036-3	58 - 24	2	
	50-944036-3	58A- 6	2	
	50-944036-7	58 - 29	4	
	50-944036-7	58A- 13	4	
	50-944041	58 - 25	1	
	50-944042	58	1	
	5000-68	47 - 4	4	
	50019	12	4	
	5010	49K- 14	4	
	5017850	49J- 33	6	
	504271	37 - 51	2	
	507208	17 - 20	3	
	50727	42 - 9	1	
	51A-66	48C- 9	1	
	51A05	48C- 5	1	
	51A45	48C- 4	1	
	51020	60 - 22	1	
	51020	60	2	
	5171	10	AR	
	52-022-094-0437	27 - 26	4	
	52-022-094-0437	28 - 15	2	
	52-022-094-0437	31 - 64	2	
	52-022-094-0562	27 - 28	4	
	52-022-094-0562	28 - 17	4	
	52-028-125-0500	13A- 25	4	

PART NUMBER	FIGURE AND INDEX NO.	QTY. PER ARTI-CLE
52-028-125-0500	57 - 74	6
52-028-125-0500	57B- 21	4
52-028-125-0500	57D- 98A	4
52-028-125-0625	57 - 73	2
52-028-125-0625	57B- 20	2
52-028-125-0625	57D- 96A	2
52-028-125-0750	13A- 18	2
52-032-156-0562	58 - 76	1
52-032-156-1120	12C- 13	2
52-032-156-1120	13B- 3	4
52A-02	48C- 10	1
5201	39 - 26	1
536-2	48B- 30	1
538-1	49	1
538-2	49 - 9	1
54A35	48C- 8	1
5427-126	57G- 16	2
55-534041-11	14C- 92	4
557-S-4	49D	2
557-S-6	49D	2
559-S-20	49D	2
56A14	48C- 14	1
560-0001	25 - 15	2
561DS4-4	54 - 33	1
561D4	54 - 17	2
561D4	54 - 20	4
5640554	57	1
5640554	57A	1
5640555	57	1
5640555	57A	1
5640556	57	1
5640556	57A- 37	1
5640556	57D- 87	1
5640557	57	1
5640557	57A- 40	1
5640558	57	1
5640558	57A- 41	1
5641801	57	1
5641801	57A	1
5641801	57D	1
5643295	61B- 15	2
5644416	61A- 13	2
5677	39	1
58-320093-10	58	1
5801N21	48B- 23	1
5801N4	48B	1
5803J13	48B- 42	1
5833B	48B- 1	1
589-0068-401	25 - 16	1
59-022-094-0375	58 - 20	1
59-022-094-0375	58A- 3	1
59-022-094-0437	12 - 14	8
59-028-125-0265	12	2
593D6	48B- 3	1
6 TYPE A	64 - 32	3
6C5X-D	57B- 28	2
6C5X-D	57B- 29	1
6C5X-D	57B- 40	1
6C5XD	57D- 10	5
6LC-C6	37	4
6P6P	22A- 28	4
600-001-10	57I- 5	2
601000-CD24	49	2
601000-8D-185/8	49C- 26	2
601000-8D-24	49C- 27	2
601000-8D18-5/8	49	2
60297-4	7	1
6041H189	63 - 66	1
6041H190	49C- 13	2
6046H39A	63 - 34	1

PART NUMBER	FIGURE AND INDEX NO.	QTY. PER ARTI-CLE
6050CC	63	4
6050CC	63 - 31K	6
60882	49C	2
61173	49C- 99	1
61260	49C- 4	8
61941	49 - 84A	2
62255	49B- 4	4
624	63 - 27	1
62628	49 - 69	2
62817	49C- 98	1
646040ICF4	61A- 7	1
646050-1F	61 - 30	1
646050ITN4	61A- 8	1
650X8	36 - 60	2
650X8	36 - 61	2
650X8	36A- 58	2
650X8	36A	2
650X8	36A- 59	2
650X8	37 - 65	2
656768ICF	61	1
661062-F	61 - 31	1
66224	49B- 22	12
671BO-010	61 - 28	1
67196	49C- 5	8
694-180702	41 - 55	1
694-180702	41A- 57	1
69451	49C- 96	1
69510	49C- 95	1
69603	49C- 93	4
7.00X6	37	2
7/16-20X2 1/8	49K- 8	4
7/16-20X3	49K- 5	8
705535	63 - 74	2
70845	49C- 92	4
711-421-1/8	58 -130	1
711-421-1/8	62 - 69	REF
71349	49 - 80	1
71349	49C- 14	1
7154	14C-103	1
71579	49 - 85A	2
71811	49B	40
72000	49	2
72000	49C	2
72036	49B	2
72270	49C- 21	2
72287	49C- 20	2
72337	49 - 84	2
72373	49C- 6	2
72418	49C- 7	2
72659-YO	49C	2
72841	49B- 3	8
72871	49	2
72871	49C	2
73036-YB	49C- 9	2
73160	49B- 15	2
73161	49B- 21	2
73163	49B- 11	2
73164	49B- 17	2
73169	49B- 2	2
73187	49B- 7	4
73189	49B	2
73194	49B- 9	2
73195	49B- 10	2
73258	49B- 1	2
734-183864	61A- 29	1
734-183864	61B- 55	1
73650	49B	12
73839	49B	2
73842	49B- 5	8
73843	49B	24

PART NUMBER	FIGURE AND INDEX NO.	QTY. PER ARTI-CLE
73868	49B- 6	4
74586	49C- 88	1
74587	49C- 87	1
74590	49C- 86	1
75 OHM 10 WATT	66	1
766-4	46 - 35	1
789-4	46 - 7	2
79-022-094-0375	57F- 1	2
79-022-094-0650	12C- 12	2
79-022-094-0650	13C- 10	4
79-022-094-375	57G- 1	6
79-022-094-375	57G- 3	2
79-028-125-1250	49 -109	8
809945	49J- 41	2
81A-16758	8 - 43	1
830-9	49K	2
831-5A	49K	2
832-24	49K	2
833-7	49K- 4	4
835-16	49	2
835-16	49C- 19	2
835-16	49K	2
335-6	49 - 88	2
835-6	49C	2
835-6	49K	2
838-30	49K	4
840-46	49K	2
8447-12A	49K- 23	4
8447-12A	49	
8447-12A	49C	
8447-12A	49K	
8447B12A	65	4
8447B12A	66	4
8523517	49 - 90	2
8526250	49	2
8526250	49C- 22	2
87A37	48C- 11	2
88	31 - 35	2
8800-K13	61 - 19	2
8801K13	58 -136E	1
8857K40	58A- 48	1
8857K44	58A- 52	1
89	27 - 18	2
8906K1019	61A	1
8906K751	61 - 5	1
8906K752	61 - 19	2
8906K753	61 - 18	1
8906K753	61A- 43	1
8906K754	61 - 6	7
8906K754	61	4
8906K754	63	4
8906K754	63 - 31D	6
8906K762	61	2
8906K762	61A- 44	2
90-28	63 - 32	1
90-3-2	58 -126	1
90-3-2	58	1
900-1	13A- 21	8
900-2	12 - 6	12
900-2	12 - 26	10
900-2	13 - 9	10
900-2	13A- 22	4
900529	49J	2
900529	49J	2
9000591	63 -119	2
901138-K1	49D	2
901200	49D	1
904269-K1	49D	1
909091-K35	49D	1
909196-K1	49D	1

PART NUMBER	FIGURE AND INDEX NO.	QTY. PER ARTI-CLE
9095	63 - 31G	2
92-LB	64 - 15	1
9461	10 - 3	1
95-000011	6	1
95-000012	6 - 11	2
95-000013	6	2
95-000017	6 - 23C	2
95-100000-1	18	1
95-100000-2	18	1
95-10186	41B- 11	1
95-10236	41B- 2	4
95-10715	37D- 3	2
95-10715	37E- 3	2
95-10716	37D- 2	2
95-10716	37E- 2	2
95-10837	37A- 1	2
95-110005-1	18	1
95-110005-2	18	1
95-110005-605	18	1
95-110005-606	18	1
95-110005-609	19A- 34	1
95-110005-610	19A	1
95-110005-613	19A- 33	1
95-110005-614	19A	1
95-110005-615	19A-	1
95-110005-616	19A	1
95-110005-676	18	1
95-110005-677	18	1
95-110005-7	18	1
95-110005-8	18	1
95-110011	19 - 23	1
95-110011-3	19A- 17	1
95-110011-4	19A	1
95-110013-1	18 - 31	1
95-110013-2	18	1
95-110014-1	18	1
95-110014-1	19	REF
95-110014-100	19	1
95-110014-117	19 - 39	1
95-110014-118	19	1
95-110014-127	19 - 34	1
95-110014-127	19A- 96	1
95-110014-128	19	1
95-110014-128	19A	1
95-110014-133	19 - 33	1
95-110014-133	19A- 95	1
95-110014-139	19 - 7	1
95-110014-142	19	1
95-110014-143	19 - 8	1
95-110014-143	19A- 20	1
95-110014-146	19	1
95-110014-146	19A	1
95-110014-147	19 - 9	1
95-110014-147	19A- 22	1
95-110014-150	19	1
95-110014-150	19A	1
95-110014-153	19 - 35	1
95-110014-153	19A- 97	1
95-110014-154	19	1
95-110014-154	19A	1
95-110014-159	19 - 18	1
95-110014-159	19A- 3	1
95-110014-160	19	1
95-110014-160	19A	1
95-110014-161	3	1
95-110014-161	2 - 16	1
95-110014-162	3	1
95-110014-162	2 - 17	1
95-110014-167	19 - 40	1
95-110014-167	19A-102	1

	PART NUMBER	FIGURE AND INDEX NO.	QTY. PER ARTI-CLE	
	95-110014-168	19	1	
	95-110014-168	19A	1	
	95-110014-169	3	1	
	95-110014-169	2 - 14	1	
	95-110014-172	3	1	
	95-110014-172	2 - 15	1	
	95-110014-191	19 - 36	1	
	95-110014-191	19A- 98	1	
	95-110014-192	19	1	
	95-110014-192	19A	1	
	95-110014-197	19 - 21	1	
	95-110014-197	19A- 23	1	
	95-110014-198	19	1	
	95-110014-198	19A	1	
	95-110014-199	3	1	
	95-110014-199	2	1	
	95-110014-2	18	1	
	95-110014-2	19	REF	
	95-110014-200	3	1	
	95-110014-200	2	1	
	95-110014-203	3	1	
	95-110014-203	2 - 22	1	
	95-110014-204	3	1	
	95-110014-204	2 - 23	1	
	95-110014-205	3	1	
	95-110014-205	2 - 26	1	
	95-110014-206	3	1	
	95-110014-206	2 - 27	1	
	95-110014-207	3	1	
	95-110014-207	2 - 24	1	
	95-110014-208	3	1	
	95-110014-208	2 - 25	1	
	95-110014-209	3	1	
	95-110014-209	2 - 28	1	
	95-110014-210	3	1	
	95-110014-210	2 - 29	1	
	95-110014-211	3	1	
	95-110014-211	2	1	
	95-110014-212	3	1	
	95-110014-212	2	1	
	95-110014-221	19 - 28	1	
	95-110014-221	19A- 30	1	
	95-110014-222	19	1	
	95-110014-222	19A	1	
	95-110014-223	19 - 29	1	
	95-110014-223	19A- 28	1	
	95-110014-224	19	1	
	95-110014-224	19A	1	
	95-110014-225	19 - 26	1	
	95-110014-225	19A- 29	1	
	95-110014-226	19	1	
	95-110014-226	19A	1	
	95-110014-227	19 - 25	1	
	95-110014-227	19A- 27	1	
	95-110014-228	19	1	
	95-110014-228	19A	1	
	95-110014-229	19 - 27	1	
	95-110014-229	19A- 26	1	
	95-110014-230	19	1	
	95-110014-230	19A	1	
	95-110014-253	18 - 52	1	
	95-110014-253	27	4	
	95-110014-258	19 - 31	1	
	95-110014-260	3	1	
	95-110014-260	2 - 13	1	
	95-110014-263	19 - 30	1	
	95-110014-263	19A- 31	1	
	95-110014-264	19	1	
	95-110014-264	19A	1	
	95-110014-265	19 - 10	1	

	PART NUMBER	FIGURE AND INDEX NO.	QTY. PER ARTI-CLE	
	95-110014-265	19A- 24	1	
	95-110014-268	19	1	
	95-110014-268	19A	1	
	95-110014-269	19 - 12	1	
	95-110014-269	19A- 25	1	
	95-110014-270	19	1	
	95-110014-270	19A	1	
	95-110014-271	3	1	
	95-110014-271	2	1	
	95-110014-274	3	1	
	95-110014-274	2	1	
	95-110014-275	19 - 15	1	
	95-110014-276	19	1	
	95-110014-291	19 - 16	1	
	95-110014-292	19	1	
	95-110014-295	19 - 2	1	
	95-110014-295	19A- 2	1	
	95-110014-296	19	1	
	95-110014-296	19A	1	
	95-110014-297	18 - 54	1	
	95-110014-297	19A- 5	1	
	95-110014-298	18	1	
	95-110014-298	19A	1	
	95-110014-308	19	1	
	95-110014-308	19A	1	
	95-110014-315	19 - 37	1	
	95-110014-315	19A- 99	1	
	95-110014-316	19	1	
	95-110014-316	19A	1	
	95-110014-317	19 - 38	1	
	95-110014-317	19A-100	1	
	95-110014-318	19	1	
	95-110014-318	19A	1	
	95-110014-321	18 - 55	1	
	95-110014-321	19A- 4	1	
	95-110014-322	18	1	
	95-110014-322	19A	1	
	95-110014-323	3	1	
	95-110014-323	2	1	
	95-110014-324	3	1	
	95-110014-324	2	1	
	95-110014-339	18 - 46	2	
	95-110014-34	19	1	
	95-110014-341	18	2	
	95-110014-35	19 - 22	1	
	95-110014-355	18	2	
	95-110014-357	19 - 14	1	
	95-110014-357	19A- 21	1	
	95-110014-358	19	1	
	95-110014-358	19A	1	
	95-110014-365	18 - 33	1	
	95-110014-366	18	1	
	95-110014-369	19	1	
	95-110014-371	19	1	
	95-110014-393	2 - 30	1	
	95-110014-394	2 - 31	1	
	95-110014-395	2 - 18	1	
	95-110014-396	2 - 19	1	
	95-110014-399	2 - 32	1	
	95-110014-400	2 - 33	1	
	95-110014-403	19A-101	1	
	95-110014-404	19A	1	
	95-110014-409	19A- 19	1	
	95-110014-41	19 - 42	1	
	95-110014-41	19A-104	1	
	95-110014-412	19A	1	
	95-110014-413	2 - 20	1	
	95-110014-416	2 - 21	1	
	95-110014-417	19A-105	1	
	95-110014-418	19A	1	

	PART NUMBER	FIGURE AND INDEX NO.	QTY. PER ARTI-CLE	
	95-110014-42	19	1	
	95-110014-42	19A	1	
	95-110014-441	19A-106	2	
	95-110014-47	19 - 24	1	
	95-110014-48	19	1	
	95-110014-601	19 -	1	
	95-110014-602	19	1	
	95-110014-612	19A- 32	1	
	95-110014-613	19A- 12	1	
	95-110014-614	19A	1	
	95-110014-615	19A- 13	1	
	95-110014-616	19A	1	
	95-110014-617	19A- 14	1	
	95-110014-618	19A	1	
	95-110014-619	19A- 15	1	
	95-110014-620	19A	1	
	95-110014-623	19A- 10	1	
	95-110014-624	19A	1	
	95-110014-63	19 - 41	1	
	95-110014-63	19A-103	1	
	95-110014-639	19A- 16	1	
	95-110014-64	19	1	
	95-110014-64	19A	1	
	95-110014-640	19A	1	
	95-110014-641	19A- 11	1	
	95-110014-642	19A	1	
	95-110014-677	19A- 1	1	
	95-110014-678	19A	1	
	95-110014-69	18	1	
	95-110014-70	18	1	
	95-110014-77	19 - 32	1	
	95-110014-78	19	1	
	95-110014-85	19 - 19	1	
	95-110014-86	19 -	1	
	95-110014-99	19 - 17	1	
	95-110015-1	18	1	
	95-110015-1	19	REF	
	95-110015-10	19A	1	
	95-110015-100	19	1	
	95-110015-101	3	1	
	95-110015-101	2	1	
	95-110015-102	3	1	
	95-110015-102	2	1	
	95-110015-103	3	1	
	95-110015-103	2 - 3	1	
	95-110015-104	3	1	
	95-110015-104	2 - 4	1	
	95-110015-107	3	1	
	95-110015-107	2	1	
	95-110015-108	3	1	
	95-110015-108	2	1	
	95-110015-109	3	1	
	95-110015-11	19A- 68	1	
	95-110015-110	3	1	
	95-110015-13	19A- 69	1	
	95-110015-131	19 - 58	1	
	95-110015-132	19	1	
	95-110015-135	19 - 57	1	
	95-110015-136	19	1	
	95-110015-14	19A	1	
	95-110015-15	19A- 70	1	
	95-110015-153	19 - 51	1	
	95-110015-153	19A- 41	1	
	95-110015-154	19	1	
	95-110015-154	19A	1	
	95-110015-155	19 - 50	1	
	95-110015-155	19A- 40	1	
	95-110015-156	19	1	
	95-110015-156	19A	1	
	95-110015-157	19 - 49	1	

	PART NUMBER	FIGURE AND INDEX NO.	QTY. PER ARTI-CLE	
	95-110015-157	19A- 39	1	
	95-110015-158	19	1	
	95-110015-158	19A	1	
	95-110015-159	18 - 27	1	
	95-110015-16	19A	1	
	95-110015-160	18	1	
	95-110015-161	19 - 48	1	
	95-110015-162	19	1	
	95-110015-163	19 - 47	1	
	95-110015-164	19	1	
	95-110015-165	3	1	
	95-110015-165	2	1	
	95-110015-166	3	1	
	95-110015-166	2	1	
	95-110015-169	3	1	
	95-110015-169	2 - 5	1	
	95-110015-17	19A- 71	1	
	95-110015-170	3	1	
	95-110015-170	2 - 6	1	
	95-110015-171	3	1	
	95-110015-171	2	1	
	95-110015-172	3	1	
	95-110015-172	2	1	
	95-110015-175	3	1	
	95-110015-175	2 - 7	1	
	95-110015-176	3	1	
	95-110015-176	2 - 8	1	
	95-110015-177	3	1	
	95-110015-177	2	1	
	95-110015-178	3	1	
	95-110015-178	2	1	
	95-110015-179	3	1	
	95-110015-18	19A	1	
	95-110015-180	3	1	
	95-110015-183	18	1	
	95-110015-183	19	REF	
	95-110015-184	18	1	
	95-110015-184	19	REF	
	95-110015-19	19A- 72	1	
	95-110015-2	18	1	
	95-110015-2	19	REF	
	95-110015-20	19A	1	
	95-110015-21	19A- 73	1	
	95-110015-22	19A	1	
	95-110015-23	19A- 74	1	
	95-110015-24	19A	1	
	95-110015-25	19A- 76	1	
	95-110015-26	19A	1	
	95-110015-27	19A- 75	1	
	95-110015-28	19A	1	
	95-110015-29	19A- 78	1	
	95-110015-30	19A	1	
	95-110015-31	19A- 77	1	
	95-110015-32	19A	1	
	95-110015-33	3	1	
	95-110015-33	2	1	
	95-110015-34	3	1	
	95-110015-34	2	1	
	95-110015-45	3	1	
	95-110015-45	2	1	
	95-110015-46	3	1	
	95-110015-46	2	1	
	95-110015-5	3	1	
	95-110015-5	2 - 1	1	
	95-110015-55	19 - 61	1	
	95-110015-56	19	1	
	95-110015-57	19 - 60	1	
	95-110015-58	19	1	
	95-110015-6	3	1	
	95-110015-6	2 - 2	1	

	PART NUMBER	FIGURE AND INDEX NO.	QTY. PER ARTI-CLE	
	95-110015-63	19	1	
	95-110015-64	19	1	
	95-110015-67	19 - 55	1	
	95-110015-67	19A- 47	1	
	95-110015-68	19	1	
	95-110015-68	19A	1	
	95-110015-7	19 - 54	1	
	95-110015-72	19A	1	
	95-110015-8	19	1	
	95-110015-81	19 - 43	1	
	95-110015-81	19A- 36	1	
	95-110015-82	19	1	
	95-110015-82	19A	1	
	95-110015-83	19 - 45	1	
	95-110015-84	19	1	
	95-110015-85	19 - 46	1	
	95-110015-86	19	1	
	95-110015-87	3	1	
	95-110015-87	2	1	
	95-110015-9	19A- 67	1	
	95-110015-95	19 - 56	1	
	95-110015-96	19	1	
	95-110015-97	19 - 44	1	
	95-110015-98	19	1	
	95-110015-99	19 - 59	1	
	95-110021	18 - 9A	2	
	95-110021-1	18 - 9J	2	
	95-110022-1	19 - 5	1	
	95-110022-2	19	1	
	95-110022-601	19	1	
	95-110022-601	19A- 18	1	
	95-110022-602	19	1	
	95-110022-602	19A	1	
	95-110023-1	19 - 11	1	
	95-110023-2	19	1	
	95-110023-601	19	1	
	95-110023-601	19A- 9	1	
	95-110023-602	19	1	
	95-110023-602	19A	1	
	95-110024-1	18 - 56	1	
	95-110024-2	18	1	
	95-110025-1	18 - 9C	4	
	95-110025-3	18 - 9H	2	
	95-110026	19 - 6	1	
	95-110026-601	19	1	
	95-110026-601	19A- 8	1	
	95-110027	19	1	
	95-110027-601	19	1	
	95-110027-602	19A	1	
	95-110030	19 - 3	1	
	95-110030-601	19	1	
	95-110030-601	19A- 7	1	
	95-110031	19 - 1	1	
	95-110031-601	19	1	
	95-110031-601	19A- 6	1	
	95-110032	19	1	
	95-110032-601	19	1	
	95-110032-601	19A	1	
	95-110036	19	1	
	95-110037	19 - 4	1	
	95-110038	18	1	
	95-110038-3	18 - 60A	1	
	95-110038-4	18	1	
	95-110038-5	18 - 60B	1	
	95-110038-6	18	1	
	95-110039	19	1	
	95-110039-1	19A	1	
	95-110041-11	19A- 61	1	
	95-110041-12	19A	1	
	95-110041-15	19A- 54	1	

	PART NUMBER	FIGURE AND INDEX NO.	QTY. PER ARTI-CLE	
	95-110041-16	19A	1	
	95-110041-17	19A- 55	1	
	95-110041-18	19A	1	
	95-110041-19	19A- 58	1	
	95-110041-20	19A	1	
	95-110041-5	19A- 62	1	
	95-110041-6	19A	1	
	95-11084	37A- 14	20	
	95-130000	21A-	2	
	95-130000-1	21A- 3	2	
	95-130000-10	21A- 13	2	
	95-130000-11	21A- 23	4	
	95-130000-13	21A- 10	2	
	95-130000-15	21A- 11	2	
	95-130000-3	3	1	
	95-130000-3	2 - 50	2	
	95-130000-3	21A- 5	2	
	95-130000-5	21A- 4	2	
	95-130000-7	2 - 51	2	
	95-130000-7	21A- 12	2	
	95-130000-9	21A	2	
	95-160000-1	22	1	
	95-160000-10	22A	1	
	95-160000-13	22A- 17	1	
	95-160000-14	22A	1	
	95-160000-17	22A- 18	1	
	95-160000-18	22A	1	
	95-160000-19	3	1	
	95-160000-19	2	1	
	95-160000-2	22	1	
	95-160000-20	3	1	
	95-160000-20	2	1	
	95-160000-21	22A- 31	1	
	95-160000-25	22A- 19	1	
	95-160000-26	22A	1	
	95-160000-27	3	1	
	95-160000-27	2	1	
	95-160000-28	3	1	
	95-160000-28	2	1	
	95-160000-29	3	1	
	95-160000-3	22A- 5	1	
	95-160000-30	3	1	
	95-160000-31	22A- 25	1	
	95-160000-33	3	1	
	95-160000-33	2	1	
	95-160000-34	3	1	
	95-160000-34	2	1	
	95-160000-35	22A- 26	1	
	95-160000-39	3	1	
	95-160000-39	2	1	
	95-160000-4	22A	1	
	95-160000-40	3	1	
	95-160000-40	2	1	
	95-160000-5	22A- 15	1	
	95-160000-6	22A	1	
	95-160000-601	22	1	
	95-160000-602	22	1	
	95-160000-9	22A- 16	1	
	95-160001-10	2 - 47	1	
	95-160001-10	22A	1	
	95-160001-11	22A- 4	1	
	95-160001-12	22A	1	
	95-160001-13	22A- 30	2	
	95-160001-15	22A- 29	1	
	95-160001-16	22A	1	
	95-160001-3	3	1	
	95-160001-3	2 - 48	1	
	95-160001-3	22A- 23	1	
	95-160001-4	3	1	
	95-160001-4	2 - 49	1	

PART NUMBER	FIGURE AND INDEX NO.	QTY. PER ARTI-CLE
95-160001-4	22A	1
95-160001-5	3	1
95-160001-5	2 - 44	1
95-160001-5	22A- 21	1
95-160001-6	3	1
95-160001-6	2 - 45	1
95-160001-6	22A	1
95-160001-601	22A-	1
95-160001-602	22A	1
95-160001-7	22A- 22	1
95-160001-8	22A	1
95-160001-9	2 - 46	1
95-160001-9	22A- 20	1
95-170000-1	18	1
95-170000-1	19	1
95-170000-10	3	1
95-170000-10	2 - 41	1
95-170000-11	3	1
95-170000-11	2 - 42	1
95-170000-12	3	1
95-170000-12	2 - 43	1
95-170000-19	19 - 69	1
95-170000-19	19A- 83	1
95-170000-2	18	1
95-170000-2	19	REF
95-170000-20	19	1
95-170000-20	19A	1
95-170000-21	19 - 70	1
95-170000-21	19A- 84	1
95-170000-22	19	1
95-170000-22	19A	1
95-170000-23	19 - 71	1
95-170000-23	19A- 85	1
95-170000-24	19	1
95-170000-24	19A	1
95-170000-25	19 - 72	1
95-170000-25	19A- 86	1
95-170000-26	19	1
95-170000-26	19A	1
95-170000-29	19 - 74	1
95-170000-29	19A- 88	1
95-170000-3	3	1
95-170000-3	2 - 34	1
95-170000-30	19	1
95-170000-30	19A	1
95-170000-31	19 - 77	1
95-170000-31	19A- 91	1
95-170000-32	19	1
95-170000-32	19A	1
95-170000-33	19 - 78	1
95-170000-33	19A- 92	1
95-170000-34	19A	1
95-170000-35	19 - 67	2
95-170000-35	19A- 81	1
95-170000-36	19	2
95-170000-36	19A	1
95-170000-37	19 - 68	2
95-170000-37	19A- 82	1
95-170000-38	19	2
95-170000-38	19A	1
95-170000-39	19 - 75	1
95-170000-39	19A- 89	1
95-170000-4	3	1
95-170000-4	2 - 35	1
95-170000-40	19	1
95-170000-40	19A	1
95-170000-41	19 - 76	1
95-170000-41	19A- 90	1
95-170000-42	19	1
95-170000-42	19A	1

PART NUMBER	FIGURE AND INDEX NO.	QTY. PER ARTI-CLE
95-170000-45	19 - 66	1
95-170000-45	19A- 80	1
95-170000-46	19	1
95-170000-46	19A	1
95-170000-5	3	1
95-170000-5	2 - 36	1
95-170000-6	3	1
95-170000-6	2 - 37	1
95-170000-601	18	1
95-170000-601	19	1
95-170000-601	19A	1
95-170000-602	18	1
95-170000-602	19	1
95-170000-602	19A	1
95-170000-63	19 - 79	1
95-170000-63	19A- 93	1
95-170000-64	19	1
95-170000-64	19A	1
95-170000-65	19 - 73	1
95-170000-65	19A- 87	1
95-170000-66	19	1
95-170000-66	19A	1
95-170000-7	3	1
95-170000-7	2 - 38	1
95-170000-8	3	1
95-170000-8	2 - 39	1
95-170000-9	3	1
95-170000-9	2 - 40	1
95-20653	41	1
95-20653	41B-	1
95-20656	37A- 13	20
95-20925	41B- 8	1
95-21521	37A- 20	2
95-21522	37A- 12	2
95-21528	37A- 16	2
95-22134	37D- 13	2
95-22134	37E- 10	2
95-22134	37F- 10	2
95-22134	37G- 10	2
95-23545	37D- 8	2
95-23546	37A- 19	2
95-23566	41B- 9	1
95-23937	37D- 17	10
95-24192	41C- 5	1
95-24193	41C- 8	1
95-24218	37B- 1	4
95-24223	37E- 8	2
95-24231	37B- 9	2
95-24232	37B- 6	2
95-24303	37E- 6	2
95-24804	37F- 4	4
95-24805	37F- 3	4
95-24834	37F- 5	4
95-24834	37G- 5	4
95-25132	37G- 3	4
95-25133	37G- 4	4
95-300001-1	37	2
95-300001-1	37C-	2
95-300001-11	37C	2
95-300001-13	37C	2
95-300001-15	37H	1
95-300001-16	37H	1
95-300001-17	37H	2
95-300001-19	37C- 6	2
95-300001-21	37C- 8	2
95-300001-23	37C	2
95-300001-25	37C	2
95-300001-27	37C	6
95-300001-29	37C	2
95-300001-3	37C- 5	2

	PART NUMBER	FIGURE AND INDEX NO.	QTY. PER ARTI-CLE	
	95-300001-31	37C	2	
	95-300001-33	37C	2	
	95-300001-35	37C	2	
	95-300001-37	37H- 1	1	
	95-300001-38	37H	1	
	95-300001-39	37H- 2	2	
	95-300001-41	37H- 3	2	
	95-300001-43	37H- 5	2	
	95-300001-45	37H- 10	2	
	95-300001-49	37H- 9	2	
	95-300001-5	37	1	
	95-300001-5	37H-	1	
	95-300001-51	37H- 12	2	
	95-300001-53	37H- 13	2	
	95-300001-57	37H- 16	2	
	95-300001-59	37H- 19	2	
	95-300001-6	37	1	
	95-300001-6	37H	1	
	95-300001-61	37H- 25	2	
	95-300001-63	37H	1	
	95-300001-64	37H	1	
	95-300001-65	37H	2	
	95-300001-7	37H- 14	2	
	95-300001-9	37H	2	
	95-30468	37D- 1	2	
	95-31159	37D- 15	2	
	95-31711	36 - 58	2	
	95-31711	36A- 56	2	
	95-31711	37A-	2	
	95-31712	36 - 56	2	
	95-31712	36A- 54	2	
	95-31712	37D-	2	
	95-31719	37D- 6	2	
	95-32102	41	1	
	95-32102	41A- 58	1	
	95-32102	41C-	1	
	95-32135	36A	2	
	95-32135	37 - 62	2	
	95-32135	37B-	2	
	95-32166	37E- 1A	2	
	95-32166	37F- 1	2	
	95-32167	36A	2	
	95-32167	37E-	2	
	95-3218	36A- 65	2	
	95-324000	61C	1	
	95-324000-1	61C	1	
	95-324000-3	61C	1	
	95-324000-5	61C	1	
	95-324005-33	61 - 8	1	
	95-324005-33	61A- 16	1	
	95-324005-33	61B- 25	1	
	95-324005-33	61C- 67	1	
	95-324005-43	61 - 1	1	
	95-324005-43	61A	1	
	95-324005-43	61B	1	
	95-324005-43	61B- 33	1	
	95-324006	58	1	
	95-324006-10	58A	1	
	95-324006-101	58	1	
	95-324006-103	58 - 4	1	
	95-324006-105	58	1	
	95-324006-107	58A-121	1	
	95-324006-109	58 - 72	1	
	95-324006-111	58 -136C	1	
	95-324006-113	58 -136J	1	
	95-324006-115	58	1	
	95-324006-117	58	1	
	95-324006-119	58 -143	1	
	95-324006-119	58A- 98	1	
	95-324006-121	58 -154	2	

	PART NUMBER	FIGURE AND INDEX NO.	QTY. PER ARTI-CLE	
	95-324006-123	58A- 37	1	
	95-324006-124	58A	1	
	95-324006-125	58	1	
	95-324006-125	58A	1	
	95-324006-129	58 -120	1	
	95-324006-13	58 -151	1	
	95-324006-131	58 -121	1	
	95-324006-133	58 -119	1	
	95-324006-135	58 - 32	1	
	95-324006-135	58A- 14	1	
	95-324006-139	58 - 31	1	
	95-324006-139	58A- 15	1	
	95-324006-143	58 - 30	1	
	95-324006-143	58A- 11	1	
	95-324006-147	58 - 28	1	
	95-324006-147	58A- 12	1	
	95-324006-15	58	1	
	95-324006-151	58	1	
	95-324006-151	58A	1	
	95-324006-155	58 -106	1	
	95-324006-155	58A-127	1	
	95-324006-157	58	1	
	95-324006-157	58A	1	
	95-324006-159	58 -137	1	
	95-324006-159	58A- 45	1	
	95-324006-16	58 -129A	1	
	95-324006-161	58 -138	1	
	95-324006-163	58A- 43	1	
	95-324006-165	58A- 99	1	
	95-324006-167	58	1	
	95-324006-169	58 -139	1	
	95-324006-169	58A- 44	1	
	95-324006-171	58 -152	1	
	95-324006-193	58	1	
	95-324006-193	58A- 7	1	
	95-324006-195	58	1	
	95-324006-197	58	1	
	95-324006-197	58A- 8	1	
	95-324006-199	58	1	
	95-324006-243	58A- 25	2	
	95-324006-257	58 - 17A	1	
	95-324006-257	58A- 22	1	
	95-324006-259	58 - 18A	5	
	95-324006-261	58	1	
	95-324006-265	58 - 18	1	
	95-324006-269	58A- 23	5	
	95-324006-3	58 -111	1	
	95-324006-35	58 -144A	1	
	95-324006-35	58A-102	1	
	95-324006-37	58A-119	1	
	95-324006-39	58A-120	1	
	95-324006-41	58 - 2	1	
	95-324006-41	59 -	1	
	95-324006-43	59	1	
	95-324006-45	59	1	
	95-324006-47	59 - 16	1	
	95-324006-49	59 - 21	1	
	95-324006-5	58 - 45	1	
	95-324006-5	58A- 84	1	
	95-324006-55	58 -118	1	
	95-324006-57	58 - 6	1	
	95-324006-58	58	1	
	95-324006-59	58 -106A	1	
	95-324006-59	58A-126	1	
	95-324006-601	58A	1	
	95-324006-641	60	1	
	95-324006-7	58	2	
	95-324006-7	58 -109	1	
	95-324006-71	58	1	
	95-324006-73	58 - 42	1	

	PART NUMBER	FIGURE AND INDEX NO.	QTY. PER ARTI-CLE	
	95-324006-75	58 -148	1	
	95-324006-75	58A-101	1	
	95-324006-8	58	1	
	95-324006-83	58A- 38	1	
	95-324006-84	58A	1	
	95-324006-85	58A- 36	1	
	95-324006-87	58 -124	1	
	95-324006-87	58A- 35	1	
	95-324006-89	58 -109A	1	
	95-324006-89	58A- 34	1	
	95-324006-9	58A-117	1	
	95-324006-91	58A- 33	1	
	95-324006-93	58A- 32	1	
	95-324006-96	58	1	
	95-324006-97	58 -123	2	
	95-324007-1	61A	1	
	95-324007-11	61A	1	
	95-324007-3	61A	1	
	95-324007-5	61A-	1	
	95-324008-11	61B	1	
	95-324008-15	61B	1	
	95-324008-21	61B-	1	
	95-324008-23	61B	1	
	95-324008-25	61B	1	
	95-324008-43	61B- 6	1	
	95-324008-43	61C- 10	1	
	95-324008-9	61B	1	
	95-324011-11	61 - 24	1	
	95-324011-13	61 - 23	2	
	95-324011-15	61 - 34	1	
	95-324011-19	61 - 25	2	
	95-324011-23	61	2	
	95-324011-27	61A- 9	1	
	95-324011-27	61B- 21	1	
	95-324011-29	61A- 4	2	
	95-324011-29	61B- 11	2	
	95-324011-3	61 - 27	1	
	95-324011-31	61A- 5	1	
	95-324011-33	61A- 1	1	
	95-324011-33	61B- 8	1	
	95-324011-35	61A	1	
	95-324011-37	61	2	
	95-324011-39	61	2	
	95-324011-39	61A- 2	2	
	95-324011-41	61A- 3	2	
	95-324011-43	61B- 3	1	
	95-324011-4[illegible]	61B- 9	1	
	95-324011-5	61	2	
	95-324011-51	61B- 2	1	
	95-324011-53	61B- 19	1	
	95-324011-55	61B- 22	1	
	95-324011-57	61B- 10	1	
	95-324011-7	61 - 33	1	
	95-324011-9	61 - 37	2	
	95-324012	61 -	1	
	95-324012	61A	1	
	95-324012	61B	1	
	95-324012-11	61A- 26	1	
	95-324012-11	61B- 52	1	
	95-324012-13	61 - 12	1	
	95-324012-13	61A	1	
	95-324012-13	61B	1	
	95-324012-15	61 - 13	2	
	95-324012-15	61A- 27	2	
	95-324012-15	61B- 53	2	
	95-324018	62	1	
	95-324018-107	62	1	
	95-324018-107	62A- 48	1	
	95-324018-11	62	1	
	95-324018-111	62 - 34	1	

	PART NUMBER	FIGURE AND INDEX NO.	QTY. PER ARTI-CLE	
	95-324018-111	62A- 56	1	
	95-324018-113	62	1	
	95-324018-115	62 - 35	1	
	95-324018-115	62A- 59	1	
	95-324018-119	62	1	
	95-324018-119	62A- 60	1	
	95-324018-123	62A- 57	1	
	95-324018-135	62 - 7	1	
	95-324018-135	62A- 6	3	
	95-324018-137	62	4	
	95-324018-137	62A- 89	2	
	95-324018-139	62 - 62	1	
	95-324018-141	62 - 60	2	
	95-324018-141	62A- 11	2	
	95-324018-143	62 - 4	2	
	95-324018-145	62 - 15	1	
	95-324018-147	62 - 46	1	
	95-324018-149	62	1	
	95-324018-15	62	1	
	95-324018-151	62 - 2	1	
	95-324018-151	62A- 2	1	
	95-324018-187	62	1	
	95-324018-19	62	1	
	95-324018-191	62 - 47	1	
	95-324018-195	62 - 45	1	
	95-324018-201	62 - 13	1	
	95-324018-205	62 - 14	1	
	95-324018-211	62 - 19	1	
	95-324018-211	62A- 16	1	
	95-324018-213	62 - 8	2	
	95-324018-213	62A- 14	2	
	95-324018-217	62A	1	
	95-324018-221	62A- 5	1	
	95-324018-223	62A- 7	1	
	95-324018-25	62 - 16	1	
	95-324018-25	62A- 20	1	
	95-324018-27	62 - 23	1	
	95-324018-3	62 - 5	1	
	95-324018-31	62 - 29	1	
	95-324018-31	62A- 44	1	
	95-324018-35	62 - 30	1	
	95-324018-35	62A- 47	1	
	95-324018-39	62 - 26	1	
	95-324018-43	62	1	
	95-324018-43	62A- 45	1	
	95-324018-47	62 - 41	1	
	95-324018-51	62A- 67	2	
	95-324018-55	62	1	
	95-324018-65	62 - 9	1	
	95-324018-67	62 - 24	1	
	95-324018-7	62 - 10	1	
	95-324018-7	62A- 9	1	
	95-324018-71	62	1	
	95-324018-75	62 - 61	1	
	95-324018-79	62 - 31	1	
	95-324018-83	62	1	
	95-324018-87	62 - 43	1	
	95-324018-91	62 - 48	1	
	95-324018-95	62	1	
	95-324018-99	62	1	
	95-324020	58 -127	1	
	95-324023	61 - 9	1	
	95-324024	58 -125	1	
	95-324028	62	2	
	95-324028	62A	1	
	95-324030	6 - 20	1	
	95-324030-7	61C- 1	1	
	95-324035-1	61	1	
	95-324035-11	61 -	1	
	95-324035-25	61	1	

PART NUMBER	FIGURE AND INDEX NO.	QTY. PER ARTICLE
95-324035-27	61 - 4	1
95-324035-29	61	1
95-324035-3	61	1
95-324035-3	61A	1
95-324035-39	61	1
95-324035-43	61	1
95-324035-45	61	1
95-324035-47	61	1
95-324035-49	61A- 14	2
95-324035-5	61 - 14	1
95-324035-5	61A- 39	1
95-324035-5	61B- 36	1
95-324035-53	61A	1
95-324035-55	61A- 6	1
95-324035-55	61B- 1	1
95-324035-59	61B- 20	1
95-324035-61	61A- 10	1
95-324035-61	61B- 17	1
95-324035-63	61A- 11	1
95-324035-65	61A- 12	1
95-324035-65	61B- 18	1
95-324035-67	61A	1
95-324035-69	61A	1
95-324038	15	1
95-324038-1	15 - 18	1
95-324038-13	15	1
95-324038-15	15 - 30	1
95-324038-17	15 - 31	1
95-324038-21	15	1
95-324038-23	15 - 1	1
95-324038-29	15	1
95-324038-29	61C- 8	1
95-324038-3	15 - 21	1
95-324038-31	15 - 2	1
95-324038-33	15	1
95-324038-35	15 - 4	1
95-324038-37	61C- 5	1
95-324038-39	15 - 5	2
95-324038-39	15 - 10	1
95-324038-39	61C- 4	1
95-324038-41	15	1
95-324038-43	15 - 9	1
95-324038-49	15 - 17	1
95-324038-49	15 - 20	1
95-324038-5	15	1
95-324038-51	15	1
95-324038-53	15	1
95-324038-59	15	1
95-324038-61	15	1
95-324038-63	15	1
95-324038-65	15	1
95-324038-65	61C- 3	1
95-324038-67	15	1
95-324038-69	15	1
95-324038-7	15 - 23	1
95-324038-9	15 - 24	1
95-324040	15	1
95-324042	6 - 12	1
95-324043-1	62 - 67	1
95-324043-3	62 - 63	2
95-324044	15	1
95-324044-13	15	1
95-324044-3	15	1
95-324044-7	15	1
95-324045	15 - 19	1
95-324045-1	15	1
95-324046	58 -129	1
95-324050	6 - 10	1
95-324053	15 - 28	1
95-324054-1	61	1

PART NUMBER	FIGURE AND INDEX NO.	QTY. PER ARTICLE
95-324056	63 - 31C	1
95-324057	61	1
95-324059	61A- 32	1
95-324059	61B- 26	1
95-324060	61A- 18	1
95-324060	61B- 31	1
95-324061	61A- 15	1
95-324061	61B- 24	1
95-324062	63	1
95-324063	61A- 20	1
95-324063	61B- 29	1
95-324063	61C- 37	1
95-324065	6	1
95-324069	61C	1
95-324069-1	61C	1
95-324072	62A	1
95-324072-1	62A	1
95-324072-11	62A- 42	1
95-324072-15	62A- 40	1
95-324072-19	62A- 51	1
95-324072-21	62A- 53	1
95-324072-25	62A- 50	1
95-324072-27	62A- 29	1
95-324072-29	62A- 33	1
95-324072-3	62A	1
95-324072-31	62A- 36	1
95-324072-33	62A- 38	1
95-324072-35	62A- 37	1
95-324072-37	62A- 35	1
95-324072-39	62A- 32	1
95-324072-41	62A- 28	1
95-324072-49	62A- 41	1
95-324072-5	62A	1
95-324072-7	62A- 65	1
95-324072-9	62A- 64	1
95-324073	62A- 76	1
95-324074-1	61C	1
95-324074-1	61C	1
95-324078-63	61C	1
95-324115-2	61 - 2	1
95-32412	36A	2
95-32412	37F-	2
95-324266	58A- 92	1
95-32679	36A	2
95-32679	37 - 60	2
95-32679	37G-	2
95-32684	37G- 1	2
95-3295	37A- 2	2
95-32954	37B- 11	10
95-3298	37A- 7	2
95-3305	37A- 6	2
95-334017-27	13C- 4	8
95-344010	63	1
95-344010-1	63 - 93	1
95-344027	61	1
95-344032	15 - 35	1
95-360000	63	1
95-360000-1	63 - 19	1
95-360000-13	63 - 31N	1
95-360000-3	63 - 21	1
95-360000-5	63 - 24	1
95-360000-7	63	2
95-360001	63	1
95-360012	63	1
95-360012-15	63 -106A	1
95-360012-17	63 -108	1
95-360012-23	63	1
95-360012-25	63 -104	1
95-360012-27	63	1
95-361014	36	1

PART NUMBER	FIGURE AND INDEX NO.	QTY. PER ARTICLE
95-361014	36A	1
95-361014	63	1
95-361015	36	1
95-361015	36A	1
95-361015	37	1
95-361015	63 - 7	1
95-361016	63	1
95-361016-601	63	1
95-361017	63 - 48	1
95-361018	63	1
95-364011	63	1
95-364011-601	63	1
95-364012	63	1
95-364013	63	1
95-364013-1	63	1
95-364013-3	63	1
95-364015	61C	1
95-364020	61	1
95-364021	15 - 27	1
95-364021	15 - 34	1
95-364022	63	1
95-364023	63	1
95-364024	63	1
95-364024-3	63	1
95-364024-5	63	1
95-364024-7	63 -	1
95-364025-1	63 -	1
95-364025-3	63	1
95-364025-7	63 - 31A	1
95-364025-9	63	1
95-364026	63 - 31B	1
95-364027	63	1
95-364027-1	63	1
95-364027-13	63	1
95-364027-15	63	1
95-364027-3	63	1
95-364027-5	63 -103A	1
95-364027-7	63 -102	1
95-364029-1	63 - 30A	1
95-364030	63	1
95-364035	63	1
95-364035-1	63	1
95-369010-1	57	1
95-369010-2	57 - 2	1
95-369010-3	57	1
95-369010-4	57 - 3	1
95-369011-1	52	2
95-369011-5	52 - 1	2
95-369012	49 - 78	2
95-369012	49 - 82	1
95-369012	49C- 16	3
95-380005-1	52A- 11	2
95-380006	53A- 2	2
95-380007	47C- 3	1
95-380009	49A- 11	2
95-380009	49C- 51	2
95-380010	10	1
95-380013-1	57A	1
95-380013-1	57D- 88	1
95-380013-3	57A	1
95-380013-3	57D	1
95-380013-5	57A	1
95-380013-5	57D- 89	1
95-380013-7	57A	1
95-380013-7	57D	1
95-380014-1	61C- 14	1
95-380015-3	61C- 18	1
95-380015-3	61C- 48	1
95-380016-1	61C- 13	1
95-380017-3	61C	2

PART NUMBER	FIGURE AND INDEX NO.	QTY. PER ARTICLE
95-380018	61A	2
95-380018	61B- 12	2
95-380018	61C- 19	2
95-380019	61C- 15	1
95-380020	61C- 11	1
95-400005	8 -	1
95-400005-634	8	1
95-400006	8	1
95-400006-634	8	1
95-400006-638	8 - 39A	1
95-400007	8	1
95-400008	8	1
95-400008-1	8	1
95-400012	8 - 75	1
95-400012	16	1
95-410005	8	1
95-410005-125	8 - 6	2
95-410005-127	8 - 8	2
95-410005-13	5	1
95-410005-13	5	1
95-410005-141	8 - 3	1
95-410005-157	8 - 9	2
95-410005-157	8	1
95-410005-161	8	1
95-410005-163	8	1
95-410005-169	8 - 11	1
95-410005-179	8	1
95-410005-187	4	1
95-410005-187	3 - 2	1
95-410005-187	4 - 2	1
95-410005-187	4A- 2	1
95-410005-193	8 - 12	1
95-410005-195	8 - 10	1
95-410005-197	8 - 5	1
95-410005-199	8	1
95-410005-201	8 - 36	1
95-410005-39	8 - 2	1
95-410005-49	8 - 1	1
95-410005-5	5	1
95-410005-5	5 - 2	1
95-410005-51	4	1
95-410005-51	3 - 18	1
95-410005-51	4 - 21	1
95-410005-51	4A- 21	1
95-410005-52	4	1
95-410005-52	3 - 28	1
95-410005-52	4 - 22	1
95-410005-52	4A- 22	1
95-410005-53	4	1
95-410005-53	3 - 1	1
95-410005-53	4 - 1	1
95-410005-53	4A- 1	1
95-410005-55	4	1
95-410005-55	3 - 45	1
95-410005-55	4 - 49	1
95-410005-55	4A- 50	1
95-410005-57	4	1
95-410005-57	3 - 46	1
95-410005-57	4 - 50	1
95-410005-57	4A- 49	1
95-410005-59	4	1
95-410005-59	3 - 29	1
95-410005-59	4 - 31	1
95-410005-59	4A- 31	1
95-410005-61	4	1
95-410005-61	3 - 30	1
95-410005-61	4 - 32	1
95-410005-61	4A- 30	1
95-410005-611	8 - 4	1
95-410005-7	5	1

PART NUMBER	FIGURE AND INDEX NO.	QTY. PER ARTICLE
95-410005-7	5	1
95-410005-81	8	1
95-410006	8	1
95-410006-1	8	1
95-410006-19	8	1
95-410006-21	8	1
95-410006-25	8	1
95-410006-27	8	1
95-410006-29	8	1
95-410006-3	5 - 3	1
95-410006-31	8	1
95-410006-33	8	1
95-410006-43	5	1
95-410006-51	8	1
95-410006-601	8	1
95-410006-603	8	1
95-410006-610	8	1
95-410006-83	8	1
95-410011	8 - 73	1
95-410011	17	1
95-410011-1	17 - 3	1
95-410011-5	17 - 9	1
95-410029	8	1
95-410029-1	8	1
95-410029-19	4	1
95-410029-19	3 - 47	1
95-410029-19	4 - 51	1
95-410029-19	4A- 48	1
95-410029-25	8 - 33	1
95-410029-29	8	1
95-410029-5	8 - 18	1
95-410029-5	8 - 21	1
95-410029-602	8 - 14	1
95-410029-7	8	1
95-410030-37	5 - 1	1
95-410031-1	8 - 38	1
95-410031-1	45	1
95-410031-11	45 - 5	2
95-410031-12	45 - 6	2
95-410031-13	45 - 7	2
95-410031-14	45 - 8	2
95-410031-17	45 - 9	2
95-410031-19	45 - 1	1
95-410031-2	8 - 39	1
95-410031-2	45	1
95-410031-20	45 - 2	1
95-410031-7	45 - 11	2
95-410033-27	8 - 77	1
95-410033-28	8	1
95-410033-47	8	1
95-410033-48	8	1
95-410035	6 - 23	2
95-410037-1	11	1
95-410037-3	11	1
95-410040-17	17 - 10	1
95-410040-19	17 - 11	1
95-410040-21	17 - 15	1
95-410040-5	8	1
95-410040-5	17	1
95-410040-9	17	1
95-41442	37E- 12	2
95-41589	37F- 12	2
95-41589	37G- 12	2
95-420011	8	1
95-420011-1	5	1
95-420011-1	5 - 5	1
95-420011-107	8 - 44	1
95-420011-113	4	1
95-420011-113	3 - 27	1
95-420011-113	4 - 25	1

PART NUMBER	FIGURE AND INDEX NO.	QTY. PER ARTICLE
95-420011-113	4A- 25	1
95-420011-115	5	1
95-420011-115	5	1
95-420011-141	4	1
95-420011-141	3 - 25	1
95-420011-143	4	1
95-420011-143	3 - 4	1
95-420011-143	4 - 4	1
95-420011-155	8 - 41	2
95-420011-157	8 - 42	2
95-420011-25	5	1
95-420011-25	5 - 6	1
95-420011-29	5	1
95-420011-29	5	1
95-420011-43	8	1
95-420011-45	4	1
95-420011-45	3 - 31	1
95-420011-45	4 - 33	1
95-420011-45	4A- 32	1
95-420011-55	4	1
95-420011-55	3 - 19	1
95-420011-55	4 - 23	1
95-420011-55	4A- 23	1
95-420011-57	4	1
95-420011-57	3 - 26	1
95-420011-57	4 - 24	1
95-420011-57	4A- 24	1
95-420011-65	4	1
95-420011-65	3 - 3	1
95-420011-65	4 - 3	1
95-420011-65	4A- 3	1
95-420011-67	4	1
95-420011-67	3 - 21	1
95-420011-79	4	1
95-420011-79	3 - 33	1
95-420011-79	4 - 35	1
95-420011-79	4A- 34	1
95-420011-83	4	1
95-420011-83	3 - 20	1
95-420011-85	4	1
95-420011-85	3 - 48	1
95-420011-85	4 - 52	1
95-420011-85	4A- 51	1
95-420012	10	1
95-420012-11	10	1
95-420012-13	10	1
95-420012-3	10 - 96	1
95-420012-601	10 -	1
95-420012-603	10	1
95-420015	8	1
95-420015-101	4A- 4	1
95-420015-103	8	1
95-420015-105	8	1
95-420015-115	4A- 5	1
95-420015-116	4A- 37	1
95-420015-145	13B- 26	4
95-420015-147	13B- 28	4
95-420015-149	13B- 27	4
95-420015-35	5 - 7	1
95-420015-41	4 - 26	1
95-420015-53	4 - 27	1
95-420015-53	4A- 26	2
95-420015-55	4 - 28	1
95-420015-55	4A- 27	1
95-420015-59	4A	1
95-420015-59	4 - 54	1
95-420015-61	4A	1
95-420015-61	4 - 53	1
95-420015-61	4A- 52	1
95-420015-63	8	1

	PART NUMBER	FIGURE AND INDEX NO.	QTY. PER ARTI-CLE	
	95-420015-65	8	1	
	95-420015-67	11	1	
	95-420015-68	11	1	
	95-420015-87	8	1	
	95-420015-89	8 - 46	1	
	95-420015-89	9	REF	
	95-420015-9	13C	4	
	95-420016-23	13B- 25	2	
	95-420016-23	13C	2	
	95-420017-5	13C	2	
	95-420017-7	13C	2	
	95-420017-9	13C	2	
	95-430005	8	1	
	95-430005-27	5	1	
	95-430005-27	5	1	
	95-430005-39	5	1	
	95-430005-39	5 - 10	1	
	95-430005-49	4	1	
	95-430005-49	3 - 54	1	
	95-430005-50	4	1	
	95-430005-50	3 - 55	1	
	95-430005-51	4	1	
	95-430005-51	3 - 52	1	
	95-430005-52	4	1	
	95-430005-52	3 - 53	1	
	95-430005-53	4	1	
	95-430005-53	3 - 9	1	
	95-430005-54	4	1	
	95-430005-55	4	1	
	95-430005-55	3 - 22	1	
	95-430005-57	4	1	
	95-430005-57	3 - 8	1	
	95-430005-58	4	1	
	95-430005-61	4	1	
	95-430005-61	3 - 23	1	
	95-430005-81	4	1	
	95-430005-81	3 - 51	1	
	95-440005	8	1	
	95-440005-11	4	1	
	95-440005-11	3 - 11	1	
	95-440005-12	4	1	
	95-440005-13	5	1	
	95-440005-13	5 -	1	
	95-440005-23	5	1	
	95-440005-23	5	1	
	95-440005-37	5	1	
	95-440005-37	5	1	
	95-440005-5	4	1	
	95-440005-5	3 - 10	1	
	95-440005-616	5	1	
	95-440005-620	5	1	
	95-440005-87	5	1	
	95-440005-9	8 - 62	2	
	95-440005-95	8	1	
	95-440005-96	8	1	
	95-440006	8	1	
	95-440006-101	5 - 9	1	
	95-440006-107	5 - 8A	1	
	95-440006-109	5	1	
	95-440006-129	8	1	
	95-440006-151	5 - 11	1	
	95-440006-171	5 - 8	1	
	95-440006-173	5	1	
	95-440006-177	5	1	
	95-440006-183	5	1	
	95-440006-185	8	1	
	95-440006-201	4A- 7	1	
	95-440006-202	4A- 39	1	
	95-440006-213	5	1	
	95-440006-612	5 - 12	1	

	PART NUMBER	FIGURE AND INDEX NO.	QTY. PER ARTI-CLE	
	95-440006-63	4A	1	
	95-440006-63	4 - 5	1	
	95-440006-64	4A	1	
	95-440006-64	4 - 39	1	
	95-440006-65	4A	1	
	95-440006-65	4 - 6	1	
	95-440006-65	4A- 8	1	
	95-440006-66	4A	1	
	95-440006-66	4 - 41	1	
	95-440006-66	4A- 40	1	
	95-440006-67	4A	1	
	95-440006-67	4 - 7	1	
	95-440006-67	4A- 6	1	
	95-440006-68	4A	1	
	95-440006-68	4 - 40	1	
	95-440006-68	4A- 38	1	
	95-440006-69	4A	1	
	95-440006-69	4 - 29	1	
	95-440006-69	4A- 28	1	
	95-440006-71	4A	1	
	95-440006-71	4 - 30	1	
	95-440006-71	4A- 29	1	
	95-440006-81	5 - 14	1	
	95-440011	8 - 74	1	
	95-440011-1	4	1	
	95-440011-1	3 - 39	1	
	95-440013-3	4A	1	
	95-440013-3	4 - 55	1	
	95-440013-4	4A	1	
	95-440013-4	4 - 56	1	
	95-440013-5	4A	1	
	95-440013-5	4 - 57	1	
	95-440013-53	26 - 12	1	
	95-440013-6	4A	1	
	95-440013-6	4 - 58	1	
	95-440013-603	5 - 15	1	
	95-440013-604	5 - 13	1	
	95-440013-81	26 - 13	1	
	95-440014	8	1	
	95-440014	16A-	1	
	95-440014-1	16A- 1	1	
	95-440014-21	16A	1	
	95-440015	8	1	
	95-440015	8	1	
	95-440015-11	4A	1	
	95-440015-11	4 - 9	1	
	95-440015-11	4A- 10	1	
	95-440015-12	4A	1	
	95-440015-12	4 - 42	1	
	95-440015-12	4A- 41	1	
	95-440015-13	4 - 19	1	
	95-440015-13	4A- 15	1	
	95-440015-14	4 - 43	1	
	95-440015-14	4A- 42	1	
	95-440015-15	4A- 9	1	
	95-440015-17	4A	1	
	95-440015-3	4A	1	
	95-440015-3	4 - 8	1	
	95-440015-5	4 - 20	1	
	95-440015-5	4 - 44	1	
	95-440015-5	4A- 16	1	
	95-440015-5	4A- 43	1	
	95-4486	37D- 11	2	
	95-4486	37E	2	
	95-4486	37F- 8	2	
	95-4486	37G- 8	2	
	95-4547	41B- 3	2	
	95-5039	36A- 66	2	
	95-5154	41B- 1	2	
	95-520011	28	1	

	PART NUMBER	FIGURE AND INDEX NO.	QTY. PER ARTI-CLE	
	95-520011-601	28	1	
	95-520012	23	1	
	95-5204	37D- 12	2	
	95-5204	37E	2	
	95-5204	37F- 9	2	
	95-5204	37G- 9	2	
	95-521000-1	31	1	
	95-521000-2	31	1	
	95-521000-33	31	1	
	95-521000-35	31 - 75	2	
	95-521000-37	31	2	
	95-521000-39	31	1	
	95-521000-601	31	1	
	95-521000-602	31	1	
	95-524000	31	1	
	95-524000	32	REF	
	95-524000	33	REF	
	95-524000-11	31 - 36	1	
	95-524000-13	32 - 11	1	
	95-524000-15	32	1	
	95-524000-17	32	1	
	95-524000-19	32 - 4	1	
	95-524000-21	31 - 11	2	
	95-524000-25	32 - 10	2	
	95-524000-27	32	1	
	95-524000-31	31 - 30	1	
	95-524000-33	31 - 31	1	
	95-524000-35	31	1	
	95-524000-37	31	1	
	95-524000-43	31 - 10A	1	
	95-524000-45	32	1	
	95-524000-7	31	1	
	95-524000-9	31	1	
	95-524001	32	1	
	95-524001	33	1	
	95-524001-1	33 - 18	1	
	95-524001-13	33 - 27	1	
	95-524001-15	33	1	
	95-524001-9	33 - 26	1	
	95-524011	34	1	
	95-524011-1	34 - 9	1	
	95-524011-3	34	1	
	95-524011-5	34	1	
	95-524012	28 - 26	1	
	95-524013	28 - 20	1	
	95-524014	28 - 19	1	
	95-524017	32	1	
	95-524017	34	1	
	95-524017-12	34	1	
	95-524017-18	34 - 27	1	
	95-524017-22	34 - 15	1	
	95-524017-25	34 - 18	1	
	95-524017-26	34 - 19	1	
	95-524017-8	34 - 11	2	
	95-524018	31	1	
	95-524018	35	1	
	95-524019	34 - 21	1	
	95-524019	34 - 31	2	
	95-524020	33	1	
	95-524020-1	33 - 24	1	
	95-524022-1	28 - 9	1	
	95-524023-5	58 - 80	1	
	95-524023-5	58A-111	1	
	95-524025	58	1	
	95-524025	58A	1	
	95-524025-1	58A	1	
	95-524025-3	58A-113	1	
	95-524025-7	58 - 78	1	
	95-524025-7	58A-109	1	
	95-524029	58	1	

	PART NUMBER	FIGURE AND INDEX NO.	QTY. PER ARTI-CLE	
	95-524029	58A	1	
	95-524030	58 - 93	1	
	95-524031	58	1	
	95-524031	58A-	1	
	95-524032	58 - 58	1	
	95-524032	58A- 68	1	
	95-524033	60	1	
	95-524034	60	1	
	95-524034-601	60 -	1	
	95-524035	34 - 6	1	
	95-524036	60 - 11	1	
	95-524038	32	1	
	95-524038	34	1	
	95-524038-11	34 - 38	1	
	95-524038-12	34	1	
	95-524038-17	34	1	
	95-524038-19	34	1	
	95-524039	34	1	
	95-524039-1	34	1	
	95-524043	60	1	
	95-524045	60	1	
	95-526010	28	1	
	95-526010-10	28 - 14	1	
	95-526010-14	28 - 29	1	
	95-526010-20	28 - 28	1	
	95-526010-8	28	1	
	95-526011	28	1	
	95-526011-1	28 - 11	1	
	95-526011-3	28 - 12	1	
	95-530000-1	14	1	
	95-530000-11	14 - 53	1	
	95-530000-13	14 - 54	1	
	95-530000-17	14 - 58	1	
	95-530000-19	14	1	
	95-530000-21	14A-100	1	
	95-530000-21	14B- 91	1	
	95-530000-21	14C- 84	1	
	95-530000-23	14A-101	1	
	95-530000-23	14B- 90	1	
	95-530000-23	14C- 85	1	
	95-530000-25	14 - 3	1	
	95-530000-25	14 - 51	1	
	95-530000-27	14A- 19	1	
	95-530000-3	14	1	
	95-530000-33	14A-113	1	
	95-530000-33	14B- 89	1	
	95-530000-33	14C- 86	1	
	95-530000-35	14	1	
	95-530000-41	14	1	
	95-530000-41	14A- 13	1	
	95-530000-43	14	1	
	95-530000-45	14	1	
	95-530000-5	14 - 7	1	
	95-530000-5	14A- 75	1	
	95-530000-7	14 - 30	1	
	95-530000-7	14A- 78	1	
	95-530000-9	14 - 41	1	
	95-530001-1	14	1	
	95-530001-13	14	1	
	95-530001-15	14	1	
	95-530001-17	14	1	
	95-530001-21	14	1	
	95-530001-21	14A- 48	1	
	95-530001-3	14	1	
	95-530001-5	14	1	
	95-530001-7	14	1	
	95-530001-9	14	1	
	95-530002-1	14A	1	
	95-530002-101	14A- 22	1	
	95-530002-103	14A- 53	1	

	PART NUMBER	FIGURE AND INDEX NO.	QTY. PER ARTI-CLE	
	95-530002-105	14A- 54	1	
	95-530002-11	14A	1	
	95-530002-111	14A	1	
	95-530002-113	14A	1	
	95-530002-113	14B- 50	1	
	95-530002-113	14C- 3	1	
	95-530002-115	14A- 73	2	
	95-530002-117	14A	2	
	95-530002-13	14A	1	
	95-530002-15	14A- 1	1	
	95-530002-21	14A-	1	
	95-530002-23	14A- 30	1	
	95-530002-25	14A	1	
	95-530002-27	14A- 26	1	
	95-530002-29	14A- 27	1	
	95-530002-3	14A	1	
	95-530002-31	14A	1	
	95-530002-33	14A- 52	1	
	95-530002-33	14A	1	
	95-530002-35	14A	4	
	95-530002-37	14A- 72	4	
	95-530002-39	14A	2	
	95-530002-41	14A- 74	2	
	95-530002-43	14C- 2	1	
	95-530002-47	14A- 59	1	
	95-530002-49	14A- 58	1	
	95-530002-5	14A	1	
	95-530002-51	14A	1	
	95-530002-53	14A- 64	1	
	95-530002-53	14B- 94	1	
	95-530002-53	14C- 55	1	
	95-530002-55	14A- 61	1	
	95-530002-57	14A	1	
	95-530002-59	14A- 57	1	
	95-530002-61	14A	1	
	95-530002-63	14A- 56	1	
	95-530002-65	14A	1	
	95-530002-67	14A	1	
	95-530002-7	14A	1	
	95-530002-71	14A	1	
	95-530002-73	14A	1	
	95-530002-73	14B- 93	1	
	95-530002-73	14C- 81	1	
	95-530002-75	14A- 96	1	
	95-530002-77	14A	1	
	95-530002-79	14A	1	
	95-530002-81	14B- 77	1	
	95-530002-89	14A- 28	1	
	95-530002-9	14A- 20	1	
	95-530002-91	14A	1	
	95-530002-93	14A	3	
	95-530002-93	14B- 75	3	
	95-530002-93	14C- 94	1	
	95-530002-95	14A	3	
	95-530002-95	14B- 76	3	
	95-530002-95	14C- 95	1	
	95-530002-97	14A- 55	1	
	95-530002-99	14A	1	
	95-530003	14B	1	
	95-530003-1	14B	1	
	95-530003-101	14B	1	
	95-530003-103	14B	1	
	95-530003-105	14B	1	
	95-530003-107	14B	1	
	95-530003-11	14B- 52	1	
	95-530003-115	14B- 71	1	
	95-530003-13	14B- 7	1	
	95-530003-131	14B- 74	1	
	95-530003-133	14B- 73	1	
	95-530003-15	14B- 24	1	

	PART NUMBER	FIGURE AND INDEX NO.	QTY. PER ARTI-CLE	
	95-530003-17	14B- 12	1	
	95-530003-19	14B- 22	1	
	95-530003-23	14B- 28	1	
	95-530003-27	14B- 43	1	
	95-530003-29	14B- 41	1	
	95-530003-3	14B-109	4	
	95-530003-31	14B- 1	1	
	95-530003-33	14B- 2	1	
	95-530003-39	14B- 53	1	
	95-530003-43	14B- 56	1	
	95-530003-47	14B- 47	2	
	95-530003-5	14B-108	2	
	95-530003-51	14B- 39	1	
	95-530003-63	14B- 20	1	
	95-530003-67	14B- 14	1	
	95-530003-69	14B- 10	1	
	95-530003-7	14B- 59	1	
	95-530003-7	14B	2	
	95-530003-73	14B-105	1	
	95-530003-9	14B- 49	1	
	95-530003-93	14B- 68	1	
	95-530003-99	14B- 67	1	
	95-530004-1	14C-	1	
	95-530004-17	14C- 1	1	
	95-530004-25	14C	1	
	95-530004-3	14C	1	
	95-530004-37	14C-106	1	
	95-530004-5	14C- 59	1	
	95-530011	14	3	
	95-530011-21	14 - 2A	1	
	95-530011-23	14 - 2B	1	
	95-530011-25	14A	1	
	95-530011-27	14A-108	1	
	95-530011-29	14A-111	1	
	95-530011-3	14A-109	1	
	95-530011-31	14A-112	1	
	95-530011-7	14A-110	1	
	95-530011-9	14 - 1	1	
	95-530012	14	1	
	95-530012-1	14 - 2C	1	
	95-530012-3	14 - 2H	1	
	95-530012-5	14 - 2E	1	
	95-530013-1	14B- 54	1	
	95-530013-11	14B- 38	1	
	95-530013-3	14B- 44	1	
	95-530013-5	14B- 13	1	
	95-530013-7	14B- 19	1	
	95-530013-9	14B- 29	1	
	95-530014-1	14B	1	
	95-530014-13	14B	1	
	95-530014-3	14B- 81	1	
	95-530014-5	14B- 82	1	
	95-530014-7	14B- 83	1	
	95-530014-9	14B- 84	1	
	95-530016	14B- 70	1	
	95-534010	14	1	
	95-534010	14A	1	
	95-534010	14B	1	
	95-534010-1	14 - 22	1	
	95-534010-1	14A- 83	1	
	95-534010-1	14B- 85	1	
	95-534010-2	14 - 23	1	
	95-534010-2	14A- 85	1	
	95-534010-2	14B- 87	1	
	95-534010-3	14 - 25	1	
	95-534010-3	14A- 84	1	
	95-534010-3	14B- 86	1	
	95-534010-5	14	1	
	95-534010-5	14A	1	
	95-534010-5	14B	1	

	PART NUMBER	FIGURE AND INDEX NO.	QTY. PER ARTI-CLE	
	95-534014	12A	1	
	95-534014-27	12A- 15	4	
	95-534014-35	12A- 27	1	
	95-534014-37	12A- 29	1	
	95-534014-39	12A- 33	1	
	95-534014-5	12A- 18	1	
	95-534014-53	12A	1	
	95-534014-53	13A	2	
	95-534014-55	12A- 31	1	
	95-534014-59	9 - 10	1	
	95-534014-59	12A	1	
	95-534014-61	12A- 38	1	
	95-534014-7	12A- 16	1	
	95-534014-75	12A	1	
	95-534014-75	13A- 44	1	
	95-534015	12A-	1	
	95-534015-1	12A- 2	1	
	95-534015-15	12A- 8	1	
	95-534015-17	12A- 10	2	
	95-534015-19	12A- 5	1	
	95-534015-21	12A- 7	1	
	95-534015-23	12A- 4	1	
	95-534015-25	12A- 3	1	
	95-534015-27	12A- 6	1	
	95-534016	12A	1	
	95-534016	13A	1	
	95-534016-1	12A	1	
	95-534016-1	13A	1	
	95-534016-19	13A- 35	1	
	95-534016-20	13A	1	
	95-534016-21	13A- 34	1	
	95-534016-22	13A	1	
	95-534016-23	13A- 31	1	
	95-534016-24	13A	1	
	95-534016-29	13A- 32	2	
	95-534017-1	12C	1	
	95-534017-17	13C- 12	2	
	95-534017-2	12C	1	
	95-534017-27	12C- 5	4	
	95-534017-27	13B- 6	4	
	95-534017-29	12C	2	
	95-534017-29	13C- 5A	2	
	95-534017-3	12C- 7	2	
	95-534017-35	12B- 7	1	
	95-534017-35	12C- 23	2	
	95-534017-35	13B- 24	2	
	95-534017-37	12C	1	
	95-534017-37	13C- 6	1	
	95-534017-38	12C	1	
	95-534017-38	13C	1	
	95-534017-41	12C	1	
	95-534017-41	13C	1	
	95-534017-42	12C	1	
	95-534017-42	13C	1	
	95-534017-45	12C- 16	2	
	95-534017-47	12C	2	
	95-534017-49	12C	2	
	95-534017-5	12C- 10	2	
	95-534017-63	13C- 13	4	
	95-534017-9	13C	2	
	95-534018-39	13B- 9	2	
	95-534018-39	13C- 22	4	
	95-534018-43	13B- 11	2	
	95-534018-43	13C- 20	4	
	95-534018-47	13B- 13	2	
	95-534018-47	13C- 17	4	
	95-534018-57	13B- 16	2	
	95-534018-57	13C- 16	2	
	95-534018-63	13B	2	
	95-534018-63	13C- 26	2	

	PART NUMBER	FIGURE AND INDEX NO.	QTY. PER ARTI-CLE	
	95-534018-65	12C- 6	2	
	95-534018-65	13B- 8	2	
	95-534018-69	12C- 1	2	
	95-534018-69	13B- 1	2	
	95-534018-73	13B	2	
	95-534018-74	13B- 7	2	
	95-534018-87	13B- 18	2	
	95-534018-91	13B	2	
	95-534018-91	13C- 23	2	
	95-534018-93	13B	1	
	95-534018-94	13B	1	
	95-534018-95	13B	1	
	95-534018-96	13B	1	
	95-534019	12C- 3	4	
	95-534019	13B- 4	4	
	95-534019	13C- 3	8	
	95-534020	14A	1	
	95-534020-1	14A- 66	1	
	95-534022-21	12B- 4	1	
	95-534022-45	12B- 18	1	
	95-534022-47	12B- 20	1	
	95-534022-59	12B	4	
	95-534022-603	12B	1	
	95-534022-605	12B	1	
	95-534022-615	12B- 5	1	
	95-534022-616	12B-	1	
	95-534022-617	12B-	1	
	95-534022-618	12B	1	
	95-534022-619	12B	1	
	95-534022-623	12B- 17	1	
	95-534022-65	12B- 15	4	
	95-534022-667	12B	1	
	95-534022-668	12B	1	
	95-534022-69	12B- 11	1	
	95-534022-73	12B	1	
	95-534022-91	12B- 2	2	
	95-534022-95	12B	1	
	95-534023	12C	1	
	95-534023	13B	1	
	95-534023	13C- 8	1	
	95-534023	13C	1	
	95-534023-1	12C- 9	1	
	95-534023-1	13B- 19	1	
	95-534023-1	13C	1	
	95-534023-1	13C- 25	1	
	95-534026	6	1	
	95-534026	14A- 23	1	
	95-534027	14A	1	
	95-534027-3	14A-122	1	
	95-534028-1	14A- 68	1	
	95-534028-1	14B-111	1	
	95-534028-11	14A-	1	
	95-534028-11	14B	1	
	95-534028-7	14A- 69	4	
	95-534028-7	14B-112	1	
	95-534028-8	14A- 70	4	
	95-534028-8	14B	1	
	95-534028-9	14A- 67	1	
	95-534028-9	14B-110	1	
	95-534030-15	12B- 23	1	
	95-534030-16	12B	1	
	95-534030-3	12B	1	
	95-534030-3	14B-113	2	
	95-534030-4	12B	1	
	95-534030-4	14B	2	
	95-534033	58 - 1	1	
	95-534036	14C	1	
	95-534040	14C- 13	1	
	95-534041-1	13C-	1	
	95-534041-11	13C- 39	4	

	PART NUMBER	FIGURE AND INDEX NO.	QTY. PER ARTI-CLE	
	95-534041-13	13C	1	
	95-534041-14	13C	1	
	95-534041-15	13C	1	
	95-534041-16	13C	1	
	95-534041-17	13C	1	
	95-534041-18	13C	1	
	95-534041-19	13C	1	
	95-534041-2	13C	1	
	95-534041-20	13C	1	
	95-534041-21	13C- 1	2	
	95-534041-23	13C- 30	4	
	95-534041-25	13C- 31	4	
	95-534041-27	13C- 32	4	
	95-534041-29	12B	1	
	95-534041-29	14C- 90	4	
	95-534041-3	13C	1	
	95-534041-4	13C	1	
	95-534041-9	14C- 89	4	
	95-5383	37D- 16	10	
	95-550000	48	1	
	95-550000-15	48 - 47	1	
	95-550000-15	48A- 47	1	
	95-550000-17	48 - 41	1	
	95-550000-17	48A- 41	1	
	95-550000-19	48 - 59	1	
	95-550000-21	48 - 92	1	
	95-550000-21	48A- 99	1	
	95-550000-23	48 - 64	1	
	95-550000-23	48A- 66	1	
	95-550000-31	48 - 99	1	
	95-550000-33	48 - 94	1	
	95-550000-33	48A-101	1	
	95-550000-35	48 - 31	1	
	95-550000-35	48A- 31	1	
	95-550000-39	48 - 46	1	
	95-550000-39	48A- 46	1	
	95-550000-41	48 - 44	1	
	95-550000-41	48A- 44	1	
	95-550000-43	48	1	
	95-550000-43	48A- 60	1	
	95-550000-45	48	1	
	95-550000-45	48A- 64	1	
	95-550000-49	48 - 90	1	
	95-550000-49	48A- 97	1	
	95-550000-55	48 - 87	1	
	95-550000-55	48A- 94	1	
	95-550000-9	48 - 84	1	
	95-550000-9	48A- 91	1	
	95-550000-9	48A-110	1	
	95-550001-1	48A	1	
	95-550001-13	48A- 78	1	
	95-550001-15	48A	1	
	95-550001-17	48A- 81A	1	
	95-550001-23	48A	1	
	95-550001-24	48A	1	
	95-550001-27	48A-106	1	
	95-550001-29	48A-107	1	
	95-550001-31	48A-112	1	
	95-550001-33	48A-109	1	
	95-550001-35	48A-111	1	
	95-550001-37	48A-115	1	
	95-550001-7	48A- 70	1	
	95-550002-1	48A	1	
	95-550002-3	48A	1	
	95-550002-9	48A	1	
	95-550015-3	48A-121	1	
	95-554011	48 - 50	1	
	95-554012-1	48 - 51	1	
	95-554014	48	1	
	95-554014	48A	1	

	PART NUMBER	FIGURE AND INDEX NO.	QTY. PER ARTI-CLE	
	95-554014-11	48 - 34	2	
	95-554014-11	48A- 34	2	
	95-554014-13	48	1	
	95-554014-13	48A	1	
	95-554014-15	48 - 36	1	
	95-554014-15	48A- 36	1	
	95-554014-7	48 - 32	1	
	95-554014-7	48A- 32	1	
	95-554014-9	48 - 33	1	
	95-554014-9	48A- 33	1	
	95-554015	48 - 35	1	
	95-554015	48A- 35	1	
	95-554016	48 - 95	2	
	95-554016	48A-102	2	
	95-554017	48	1	
	95-554017	48A	1	
	95-554017-11	48	1	
	95-554017-11	61	1	
	95-554017-19	61	1	
	95-554017-23	48 - 78	1	
	95-554017-23	48A- 85	1	
	95-554017-3	48 - 77	1	
	95-554017-3	48A- 84	1	
	95-554017-35	48 - 80	1	
	95-554017-35	48A- 86	1	
	95-554017-35	61	1	
	95-554017-35	61A	1	
	95-554017-35	61B	1	
	95-554017-37	48	1	
	95-554017-37	48A	1	
	95-554017-37	61	1	
	95-554017-37	61A	1	
	95-554017-37	61B	1	
	95-554019-1	48	1	
	95-554019-3	48 - 67	1	
	95-554020	48 - 74	1	
	95-554021	48 - 11	1	
	95-554021	48A- 11	1	
	95-554021-3	48	1	
	95-554021-3	48A	1	
	95-554022	48 - 7	1	
	95-554022	48A- 7	1	
	95-554022	48A-120	1	
	95-554024	48	1	
	95-554024	48A	1	
	95-554025	48	1	
	95-554025	48A	1	
	95-554025-1	48 - 21	1	
	95-554025-1	48A- 21	1	
	95-554025-3	48 - 22	1	
	95-554025-3	48A- 22	1	
	95-554026	48 - 23	1	
	95-554026	48A- 23	1	
	95-554028	48	1	
	95-554028	48A	1	
	95-554028-5	48 - 40	1	
	95-554028-5	48A- 40	1	
	95-554028-7	48 - 39	1	
	95-554028-7	48A- 39	1	
	95-554031	48 - 68	1	
	95-554032	48 - 70	1	
	95-554035	15	1	
	95-554036-69	47C- 24	1	
	95-554036-75	47C	1	
	95-554036-77	47C- 23	1	
	95-554037-1	48A- 51	1	
	95-554038-9	48A- 50	1	
	95-554039	48A- 68	1	
	95-554039-3	48A-105	1	
	95-554040	48A-104	1	

PART NUMBER	FIGURE AND INDEX NO.	QTY. PER ARTICLE
95-554041	48A- 69	1
95-560000-19	64 - 37	1
95-560000-21	64 - 43	1
95-560000-23	64 - 45	1
95-560000-3	64 - 1	1
95-560000-5	64 - 2	1
95-560000-57	64	1
95-560000-59	64	1
95-560000-61	64 - 10	1
95-560000-63	64 - 35	1
95-560000-65	64 - 6	1
95-570000	7	1
95-590000	7 -	1
95-590001	7	1
95-590001-1	7	1
95-590001-5	7	1
95-590011	7	1
95-590014	7	1
95-590014-1	7	1
95-590014-3	7	1
95-590014-31	7	1
95-590014-33	7	1
95-590014-35	7	1
95-590014-37	7	1
95-590014-39	7	1
95-590014-41	7	1
95-590014-5	7	1
95-590014-51	7	1
95-590014-53	7	1
95-590014-55	7	1
95-590014-59	7	1
95-590014-61	7	1
95-590014-63	7	1
95-590015-1	7 - 6	2
95-590016-1	7 - 12	1
95-590018	7	1
95-590020-15	7	1
95-590021	7 - 9	1
95-590026	7 -	1
95-590029	7 - 3	1
95-590031	7 - 2	1
95-600000	26	1
95-600000-3	26 - 5	1
95-600000-4	26	1
95-600001	26	1
95-600001-3	26	1
95-600001-4	26	1
95-610005-1	26 - 3	1
95-610005-1	29	REF
95-610005-2	26	1
95-610005-2	29	REF
95-610005-3	29 - 3	1
95-610005-4	29	1
95-610005-601	29 -	1
95-610005-602	29	1
95-610006-1	26	1
95-610006-1	29	REF
95-610006-11	29	2
95-610006-13	4A	1
95-610006-13	4 - 65	2
95-610006-13	4A- 66	2
95-610006-15	29	2
95-610006-2	26	1
95-610006-2	29	REF
95-610006-601	29	1
95-610006-602	29	1
95-610011	26	1
95-610011-1	26 - 7	1
95-610012-1	26	1
95-610012-5	26	1

PART NUMBER	FIGURE AND INDEX NO.	QTY. PER ARTICLE
95-620010-1	26 - 1	1
95-620010-1	27	REF
95-620010-19	4	2
95-620010-19	3 - 63	2
95-620010-19	4 - 71	2
95-620010-19	4A- 65	2
95-620010-19	4A- 71	2
95-620010-2	26	1
95-620010-2	27	REF
95-620010-21	4	1
95-620010-21	3 - 64	1
95-620010-21	4 - 72	1
95-620010-22	4	1
95-620010-22	3 - 65	1
95-620010-22	4 - 73	1
95-620010-47	4	1
95-620010-47	3 - 59	1
95-620010-48	4	1
95-620010-48	3 - 60	1
95-620010-49	4	1
95-620010-49	3 - 61	1
95-620010-50	4	1
95-620010-50	3 - 62	1
95-620010-51	4	1
95-620010-51	3 - 57	1
95-620010-52	4	1
95-620010-52	3 - 58	1
95-620010-60	27 - 9	4
95-620010-601	27 -	1
95-620010-602	27	1
95-620010-62	27	2
95-620010-621	27	1
95-620010-622	27	1
95-620010-63	26	1
95-620010-63	27	REF
95-620010-64	26	1
95-620010-64	27	REF
95-620010-65	4A	1
95-620010-65	4 - 61	1
95-620010-65	4A- 57	1
95-620010-66	4A	1
95-620010-66	4 - 62	1
95-620010-66	4A- 58	1
95-620010-67	4A	1
95-620010-67	4 - 63	1
95-620010-67	4A- 59	1
95-620010-68	4A	1
95-620010-68	4 - 64	1
95-620010-68	4A- 60	1
95-620010-69	4A	1
95-620010-69	4 - 59	1
95-620010-69	4A- 55	1
95-620010-70	4A	1
95-620010-70	4 - 60	1
95-620010-70	4A- 56	1
95-620010-79	4A	1
95-620010-79	4A- 53	1
95-620010-80	4A	1
95-620010-80	4A- 54	1
95-620010-81	4A	1
95-620010-81	4A- 61	1
95-620010-82	4A	1
95-620010-82	4A- 62	1
95-620010-83	4A	1
95-620010-83	4A- 63	1
95-620010-84	4A	1
95-620010-84	4A- 64	1
95-630005	26 - 4	1
95-630005-1	30 - 14	1
95-630005-178	30	1

PART NUMBER	FIGURE AND INDEX NO.	QTY. PER ARTICLE
95-630005-3	4	1
95-630005-3	3 - 17	1
95-630005-3	4 - 18	1
95-630005-3	4A- 18	1
95-630005-4	4	1
95-630005-4	3 - 44	1
95-630005-4	4 - 48	1
95-630005-4	4A- 47	1
95-630005-601	30 -	1
95-630005-602	30	1
95-630005-7	30 - 6	1
95-640005	26 - 2	1
95-640005	28	REF
95-640005-11	4	1
95-640005-11	3 - 12	1
95-640005-15	4	1
95-640005-15	3 - 13	1
95-640005-15	4 - 15	1
95-640005-15	4A- 13	1
95-640005-16	4	1
95-640005-16	3 - 40	1
95-640005-16	4 - 45	1
95-640005-27	4	1
95-640005-27	3 - 14	1
95-640005-27	4 - 16	1
95-640005-27	4A- 14	1
95-640005-30	4	1
95-640005-30	3 - 41	1
95-640005-30	4 - 46	1
95-640005-30	4A- 45	1
95-640005-47	28 - 5	1
95-640005-601	28 -	1
95-640006	26	1
95-640006	28	REF
95-640006-1	4A	1
95-640006-1	4 - 10	1
95-640006-1	4A- 11	1
95-640006-13	28 - 40	1
95-640006-40	4A	1
95-640006-40	4 - 11	1
95-640006-40	4A- 12	1
95-640006-601	28	1
95-6867	41C- 2	3
95-6891	41B- 12	1
95-810000-1	36	1
95-810000-1	36	1
95-810000-2	36	1
95-810000-2	36	1
95-810000-602	36 -	1
95-810000-603	36	1
95-810000-612	36	1
95-810000-613	36	1
95-810001-1	36	1
95-810001-2	36	1
95-810002-1	37	1
95-810002-15	37	1
95-810002-16	37	1
95-810002-2	37	1
95-810002-3	37 - 56	1
95-810002-4	37	1
95-810002-5	37	1
95-810002-6	37	1
95-810002-601	37 -	1
95-810002-602	37	1
95-810002-605	37	1
95-810002-606	37	1
95-810002-9	37	2
95-810005	38	1
95-810010-1	36	1
95-810010-2	36	1

PART NUMBER	FIGURE AND INDEX NO.	QTY. PER ARTICLE
95-810010-3	36	2
95-810010-5	36 - 8	2
95-810010-7	36	1
95-810010-7	36A- 12	1
95-810010-8	36 - 13	1
95-810010-8	36A	1
95-810011-1	36	1
95-810011-2	36 - 6	1
95-810012	36	2
95-810013	36	2
95-810013-1	36 - 14	2
95-810014	36 - 15	2
95-810016-1	36	1
95-810016-3	36 - 48	1
95-810017	38 - 1	1
95-810017	39 -	REF
95-810017-7	38	1
95-810017-7	39	REF
95-810019	46	1
95-810019-1	46	1
95-810019-11	46 - 41	1
95-810019-13	46 - 47	1
95-810019-15	46 - 52	1
95-810019-17	46 - 51	1
95-810019-19	46 - 44	1
95-810019-21	46 - 64	1
95-810019-23	46 - 65	1
95-810019-25	46 - 66	1
95-810019-3	46	1
95-810019-35	46	1
95-810019-37	46	1
95-810019-39	46	1
95-810019-5	46	1
95-810019-7	46 - 46	1
95-810019-9	46 - 42	1
95-814005	46	1
95-814005-13	46	1
95-814005-21	46	1
95-814005-23	46	1
95-814005-25	46 - 9	1
95-814005-27	46	1
95-814005-29	46 - 28	1
95-814005-3	46 - 8	1
95-814005-31	46	1
95-814005-33	46 - 29	1
95-814005-37	46	1
95-814005-38	46	1
95-814005-5	46 - 22	1
95-814005-9	46 - 27	1
95-820000	41	1
95-820000-1	41	1
95-820000-1	41A- 59	1
95-820000-3	41	1
95-820000-3	41A- 60	1
95-820006	42	1
95-820006-1	42 -	1
95-824005	41 -	1
95-824005-1	41 - 4	1
95-824005-1	41A- 5	1
95-824005-3	41	1
95-824005-3	41A	1
95-824011	41 - 13	1
95-824014	41	1
95-824014-602	41	1
95-824016	41	1
95-824016-1	41	1
95-824016-3	41 - 11	1
95-824017	41 - 66	1
95-824018	42	1
95-824019	42 - 32	1

PART NUMBER	FIGURE AND INDEX NO.	QTY. PER ARTICLE
95-824020	42	1
95-824020-3	42 - 18	1
95-910001-101	49	1
95-910001-103	49	1
95-910001-107	49 - 97	2
95-910001-107	49C- 24	2
95-910001-109	49	1
95-910001-11	49 - 15	1
95-910001-117	49C- 81	1
95-910001-118	49C	1
95-910001-139	49	1
95-910001-141	49 - 98	2
95-910001-141	49C- 29	2
95-910001-143	49	2
95-910001-145	49	2
95-910001-147	49C- 65	1
95-910001-149	49C- 66	1
95-910001-15	49 - 2	1
95-910001-151	49C- 68	1
95-910001-153	49 - 54	1
95-910001-153	49A- 14	1
95-910001-154	49	1
95-910001-154	49A	1
95-910001-155	49 - 16	1
95-910001-155	49C- 80	1
95-910001-156	49	1
95-910001-156	49C	1
95-910001-157	49 - 18	2
95-910001-157	49C- 79	2
95-910001-158	49	2
95-910001-158	49C	2
95-910001-159	49 - 7	6
95-910001-161	49	2
95-910001-163	49 - 68	2
95-910001-165	49	1
95-910001-167	49	1
95-910001-169	49	1
95-910001-169	49C- 71	1
95-910001-171	49	1
95-910001-171	49C	1
95-910001-173	49 - 58	1
95-910001-175	49	1
95-910001-177	49 - 25	1
95-910001-179	49	1
95-910001-187	49 - 20	1
95-910001-189	49	1
95-910001-191	49 - 91	2
95-910001-191	49C- 23	2
95-910001-195	49 - 50B	4
95-910001-195	49A- 15	4
95-910001-195	49C- 69	1
95-910001-197	49	1
95-910001-197	49A-	1
95-910001-198	49	1
95-910001-198	49A	1
95-910001-200	49	1
95-910001-200	49A	1
95-910001-201	49A- 1	1
95-910001-203	49A	1
95-910001-205	49A- 2	1
95-910001-207	49A	1
95-910001-209	49A	1
95-910001-209	49C- 73	1
95-910001-211	49A	1
95-910001-211	49C	1
95-910001-213	49A	1
95-910001-213	49C- 74	1
95-910001-215	49A	1
95-910001-215	49C	1
95-910001-233	49A- 7	1

PART NUMBER	FIGURE AND INDEX NO.	QTY. PER ARTICLE
95-910001-233	49C- 58	1
95-910001-235	49A	1
95-910001-235	49C	1
95-910001-244	49C- 54	1
95-910001-25	49 -108	8
95-910001-33	49	1
95-910001-35	49 - 8	1
95-910001-35	49C- 72	1
95-910001-41	49 - 61	2
95-910001-45	49	1
95-910001-47	49	1
95-910001-5	49 - 1	1
95-910001-57	49	1
95-910001-59	49	1
95-910001-59	49C	1
95-910001-63	49	1
95-910001-67	49 - 70	2
95-910001-69	49 - 64	2
95-910001-69	49A- 8	2
95-910001-69	49C- 61	2
95-910001-77	49	1
95-910001-80	49	1
95-910001-95	49	8
95-910001-99	49 - 71	2
95-910002-1	49C-	1
95-910002-11	49C- 37	4
95-910002-13	49C- 35	2
95-910002-2	49C	1
95-910002-4	49C	1
95-910002-5	49C	1
95-910002-6	49C	1
95-910002-8	49C	1
95-910002-9	49C- 36	2
95-910002-95	49C- 2	8
95-910005	49 - 38	2
95-910005	49C- 38	2
95-910011-101	51	1
95-910011-102	51	1
95-910011-145	51	2
95-910011-146	51	2
95-910011-153	51 - 5	2
95-910011-154	51	2
95-910011-157	51 - 2	2
95-910011-203	51 - 3	2
95-910011-204	51	2
95-910011-303	51	4
95-910011-345	51 - 29	2
95-910011-347	51 - 31	2
95-910011-352	51 - 15	2
95-910011-371	51	1
95-910011-372	51	1
95-910011-373	51	1
95-910011-374	51	1
95-910011-381	51	2
95-910011-383	51	2
95-910011-391	51 - 7	8
95-910011-399	51 - 14	2
95-910011-400	51	2
95-910011-401	51	2
95-910011-407	51 - 26	2
95-910011-457	51	2
95-910011-459	51	2
95-910011-465	51 - 20	1
95-910011-466	51	1
95-910011-467	51 - 19	1
95-910011-468	51	1
95-910011-469	51	2
95-910011-469	51	1
95-910011-473	51	2
95-910011-473	51 - 23	1

	PART NUMBER	FIGURE AND INDEX NO.	QTY. PER ARTI-CLE	
	95-910011-479	51 - 22	2	
	95-910011-483	51	2	
	95-910011-485	51	2	
	95-910011-497	51 - 6A	2	
	95-910011-503	51	2	
	95-910011-505	51	1	
	95-910011-506	51	1	
	95-910011-507	51 - 6C	2	
	95-910011-511	51	2	
	95-910011-513	51	1	
	95-910011-514	51	1	
	95-910011-601	51 -	1	
	95-910011-602	51	1	
	95-910011-603	51	2	
	95-910011-604	51	2	
	95-910011-605	51	2	
	95-910011-606	51 -	2	
	95-910011-607	51 - 1	2	
	95-910011-608	51	1	
	95-910011-609	51	1	
	95-910011-617	51	2	
	95-910011-618	51	2	
	95-910011-657	51 - 1	2	
	95-910015	49	2	
	95-910015	50	1	
	95-910015-1	50 - 3	2	
	95-910015-113	50 - 8	2	
	95-910015-127	50 - 21	2	
	95-910015-135	50 - 19	2	
	95-910015-155	50 - 23	2	
	95-910015-159	50 - 24	2	
	95-910015-160	50 - 26	2	
	95-910015-17	50 - 5	2	
	95-910015-171	50 - 13	2	
	95-910015-173	50 - 12	2	
	95-910015-183	50 - 15	2	
	95-910015-185	50 - 14	2	
	95-910015-197	50 - 22	2	
	95-910015-203	50 - 16	2	
	95-910015-209	50 - 2A	2	
	95-910015-229	50	1	
	95-910015-237	50	1	
	95-910015-253	50	2	
	95-910015-257	50 - 7	2	
	95-910015-263	50	1	
	95-910015-269	50	1	
	95-910015-27	50 - 1	1	
	95-910015-275	50	1	
	95-910015-287	50	2	
	95-910015-29	50 - 2	2	
	95-910015-295	50	1	
	95-910015-295	50	1	
	95-910015-301	50	2	
	95-910015-305	50	1	
	95-910015-307	50	1	
	95-910015-317	50	2	
	95-910015-319	50	1	
	95-910015-329	49C	1	
	95-910015-329	50	1	
	95-910015-51	50 - 10	2	
	95-910015-61	50 - 9	2	
	95-910015-63	50 - 6	2	
	95-910015-7	50 - 4	1	
	95-910016-1	52	REF	
	95-910016-19	52 - 13	1	
	95-910016-19	52A- 1	1	
	95-910016-2	52	REF	
	95-910016-20	52	1	
	95-910016-20	52A	1	
	95-910016-39	52	2	

	PART NUMBER	FIGURE AND INDEX NO.	QTY. PER ARTI-CLE	
	95-910016-43	52 - 4	1	
	95-910016-43	52	1	
	95-910016-45	52 - 5	2	
	95-910016-47	52 - 6	2	
	95-910016-53	52	2	
	95-910016-55	52 - 11	2	
	95-910016-57	52 - 12	2	
	95-910016-59	52 - 10	2	
	95-910016-601	52 -	1	
	95-910016-602	52	1	
	95-910016-603	52	1	
	95-910016-604	52	1	
	95-910016-61	52 - 7	2	
	95-910016-61	52	1	
	95-910016-63	52 - 3	2	
	95-910016-75	52 - 16	4	
	95-910016-75	52A- 4	4	
	95-910016-77	52 - 14	1	
	95-910016-77	52A- 2	1	
	95-910016-78	52	1	
	95-910016-78	52A	1	
	95-910016-79	52 - 15	1	
	95-910016-79	52A- 3	1	
	95-910016-80	52	1	
	95-910016-80	52A	1	
	95-910016-81	52	1	
	95-910016-81	52A	1	
	95-910016-82	52	1	
	95-910016-82	52A	1	
	95-910016-83	52	2	
	95-910016-85	52	2	
	95-910016-87	52	1	
	95-910016-87	52	1	
	95-910016-89	52	1	
	95-910016-89	52	1	
	95-910016-91	52	1	
	95-910016-93	52	1	
	95-910016-95	52	1	
	95-910016-97	52	1	
	95-910017	49 -110	4	
	95-910017	49A- 27	2	
	95-910017	49C- 83	2	
	95-910018	49 -112	1	
	95-910018	49A- 26	2	
	95-910018	49C- 82	2	
	95-910018-1	49	1	
	95-910019-1	49 - 12	1	
	95-910019-11	49	1	
	95-910019-13	49	1	
	95-910019-15	49 - 13	2	
	95-910019-3	49	2	
	95-910019-9	49	1	
	95-910020	49 - 34	4	
	95-910020	49C- 70	4	
	95-910025-1	52A-	1	
	95-910025-13	52A- 8	2	
	95-910025-2	52A	1	
	95-910025-9	52A- 6	2	
	95-910026	52A- 16	2	
	95-919100	49	2	
	95-919100	53 -	2	
	95-919100-11	53 - 5	2	
	95-919100-11	53A- 18	2	
	95-919100-15	53 - 2	2	
	95-919100-15	53A- 15	2	
	95-919100-23	53 - 9	1	
	95-919100-23	53	1	
	95-919100-25	53	1	
	95-919100-27	53	1	
	95-919100-29	53A- 1	1	

PART NUMBER	FIGURE AND INDEX NO.	QTY. PER ARTICLE
95-919100-3	53	2
95-919100-3	53A	2
95-919100-31	53A	1
95-919100-33	49A	1
95-919100-33	53A	1
95-919100-34	49A	1
95-919100-34	53A	1
95-919100-37	53A- 21	2
95-919100-39	49A	1
95-919100-39	53A	REF
95-919100-40	49A-	1
95-919100-40	53A	REF
95-919100-41	49C	1
95-919100-41	53	1
95-919100-42	49C	1
95-919100-42	53	1
95-919100-47	53 - 35	2
95-919100-5	53 - 1	2
95-919100-5	53A- 14	2
95-919100-601	53	2
95-919112-1	53	1
95-919112-103	53	2
95-919112-107	53	2
95-919112-109	53	1
95-919112-111	53	2
95-919112-15	53	1
95-919112-19	53 - 12	2
95-919112-23	53 - 19	2
95-919112-25	53 - 18	2
95-919112-27	53 - 17	4
95-919112-29	53 - 21	2
95-919112-31	53	2
95-919112-33	53	2
95-919112-35	53 - 41	2
95-919112-37	53 - 23	2
95-919112-39	53 - 14	2
95-919112-45	53 - 20	2
95-919112-51	53 - 26	2
95-919112-69	53 - 33	8
95-919112-81	53	2
95-919112-83	53	2
95-919112-85	53	2
95-919112-89	53	2
95-919112-93	53	4
95-919112-95	53	4
95-919112-95	53	2
95-919112-95	53	2
95-919112-95	53 - 34	8
95-919112-97	53	2
95-919114-1	53	1
95-919114-11	53 - 11	1
95-919114-15	53	1
95-919114-17	53	1
95-919114-19	53	1
95-919117-1	53	1
95-919117-19	53	2
95-919117-27	53 - 32	2
95-919117-29	53 - 36	2
95-919117-3	53	1
95-919117-31	53 - 38	2
95-919117-35	53 - 37	2
95-919117-37	53 - 31	2
95-919117-39	53 - 28	2
95-919117-41	53 - 39	2
95-919117-43	53 - 40	2
95-919117-5	53 - 29	1
95-919117-7	53	1
95-920001	57	1
95-920001-1	57 - 51	2
95-920001-10	57 - 30	1

PART NUMBER	FIGURE AND INDEX NO.	QTY. PER ARTICLE
95-920001-100	57 - 40	1
95-920001-101	57 - 55	1
95-920001-103	57	1
95-920001-105	57 -101	1
95-920001-11	57	1
95-920001-111	57 - 91	2
95-920001-113	57 - 93	2
95-920001-115	57 - 87	2
95-920001-119	57 -126	2
95-920001-12	57 - 35	1
95-920001-121	57 - 96	2
95-920001-125	57 - 77	2
95-920001-127	57 - 83	2
95-920001-129	57 - 65	2
95-920001-13	57	1
95-920001-131	57	2
95-920001-137	57	1
95-920001-139	57	1
95-920001-14	57 - 32	1
95-920001-14	57D	1
95-920001-140	57	1
95-920001-141	57	1
95-920001-142	57	1
95-920001-143	57	1
95-920001-144	57	1
95-920001-145	57 -119	2
95-920001-15	57 -	1
95-920001-155	57	1
95-920001-16	57 - 34	1
95-920001-161	57	1
95-920001-163	57	1
95-920001-165	57 - 61	2
95-920001-21	57 - 99	1
95-920001-22	57	1
95-920001-23	57 - 97	1
95-920001-24	57	1
95-920001-25	57 -109	1
95-920001-26	57	1
95-920001-27	57 -110	1
95-920001-28	57	1
95-920001-29	57 -106	1
95-920001-3	57 - 53	2
95-920001-30	57	1
95-920001-31	57 -107	1
95-920001-32	57	1
95-920001-33	57 -103	2
95-920001-35	57 -102	2
95-920001-37	57	1
95-920001-38	57 - 42	1
95-920001-39	57	1
95-920001-40	57 - 44	1
95-920001-43	57 - 86	2
95-920001-45	57	1
95-920001-46	57 - 46	1
95-920001-5	57	1
95-920001-57	57 -128	1
95-920001-58	57	1
95-920001-59	57 - 64	1
95-920001-60	57	1
95-920001-601	57	1
95-920001-602	57	1
95-920001-604	57	1
95-920001-61	57 -114	2
95-920001-63	57 - 57	2
95-920001-7	57	1
95-920001-79	57 - 81	2
95-920001-8	57 - 58	1
95-920001-85	57 - 71	2
95-920001-87	57	1
95-920001-88	57 - 37	1

	PART NUMBER	FIGURE AND INDEX NO.	QTY. PER ARTI-CLE	
	95-920001-9	57	1	
	95-920001-91	57 -112	2	
	95-920001-97	57 - 36	2	
	95-920001-99	57	1	
	95-920002	57	1	
	95-920002-17	57 -	1	
	95-920002-18	57	1	
	95-920002-23	57	2	
	95-920005-10	57A	1	
	95-920005-10	57D	1	
	95-920005-11	57B- 4	1	
	95-920005-13	57B	1	
	95-920005-15	57A- 4	1	
	95-920005-17	57A	1	
	95-920005-3	57A	1	
	95-920005-7	57B- 2	1	
	95-920005-8	57B	1	
	95-920005-9	57A- 6	1	
	95-920005-9	57D- 43	1	
	95-920006	57D	1	
	95-920006-11	57D	1	
	95-920006-13	57D- 46	2	
	95-920006-5	57D- 41	2	
	95-920006-7	57D- 29	2	
	95-920006-9	57D- 59	2	
	95-920011-1	57	1	
	95-920011-2	57 - 1	1	
	95-920011-5	57A- 2	1	
	95-920011-5	57D- 2	1	
	95-920011-6	57A	1	
	95-920011-6	57D	1	
	95-920014	57 -124	1	
	95-920019-3	57D- 95	2	
	95-920020-1	49C	1	
	95-920020-1	57D	1	
	95-921012	6 - 16	2	
	95-921012-1	6 - 16	2	
	95-921012-3	6	2	
	95-921013-1	6 - 15	2	
	95-921013-3	6	2	
	95-921016	6 - 22	2	
	95-924014	57	2	
	95-924014-1	57 - 67	2	
	95-924014-3	57	2	
	95-924014-5	57	2	
	95-924014-5	57B- 15	2	
	95-924015-1	57 - 78	1	
	95-924015-2	57	1	
	95-924015-3	57B- 27	2	
	95-924015-5	57B-	1	
	95-924015-6	57B	1	
	95-924019	57 - 72	2	
	95-924020	57B	1	
	95-924020-1	57B	1	
	95-924026	57D- 96	2	
	95-924027	57D-103	1	
	95-924027-1	57D	1	
	95-940000	54	1	
	95-940000-15	54 - 6	2	
	95-940000-21	54 - 13	1	
	95-940000-27	54	1	
	95-940000-31	54 - 14	2	
	95-940000-33	54 - 22	4	
	95-940000-35	54 - 30	4	
	95-940000-37	54	2	
	95-940000-41	54	1	
	95-940000-43	54	1	
	95-940000-47	54	1	
	95-940000-51	54	1	
	95-940000-67	54	1	

	PART NUMBER	FIGURE AND INDEX NO.	QTY. PER ARTI-CLE	
	95-940011	54 - 4	1	
	95-940011-1	48 -100	1	
	95-940011-1	48A- 74	1	
	95-940011-3	48 -101	1	
	95-940011-3	48A	1	
	95-940011-3	48A- 79	1	
	95-940011-5	46 - 23A	1	
	95-940011-5	58 -136M	1	
	95-940011-7	54	1	
	95-940017-1	54	2	
	95-940017-3	54	2	
	95-960006	65	1	
	95-960006-1	65 - 1	1	
	95-960006-117	65 - 18	1	
	95-960006-123	65 - 14	2	
	95-960006-123	66 - 29	2	
	95-960006-139	65 - 35	4	
	95-960006-139	66 - 46	4	
	95-960006-15	65 - 4	1	
	95-960006-17	65 - 32	2	
	95-960006-17	66 - 43	2	
	95-960006-19	65 - 36	4	
	95-960006-19	66 - 47	4	
	95-960006-41	65 - 29	2	
	95-960006-41	66 - 40	2	
	95-960006-45	65 - 31	2	
	95-960006-45	66 - 42	2	
	95-960006-49	65	1	
	95-960006-49	66	1	
	95-960006-53	65	1	
	95-960006-57	65 - 25	1	
	95-960006-57	66 - 36	1	
	95-960006-603	49	2	
	95-960006-603	49C	2	
	95-960006-603	49K	2	
	95-960006-61	65 - 23	1	
	95-960006-65	65 - 21	1	
	95-960006-69	65 - 20	1	
	95-960006-73	65 - 11	1	
	95-960006-75	65 - 7	1	
	95-960006-77	65 - 6	1	
	95-960006-81	65 - 9	1	
	95-960006-83	65 - 8	1	
	95-960006-97	65 - 10	1	
	95-960007	66	1	
	95-960007-1	66 - 1	1	
	95-960007-19	66	1	
	95-960007-23	66 - 6	1	
	95-960007-25	66 - 14	1	
	95-960007-27	66 - 21	1	
	95-960007-29	66 - 24	1	
	95-960007-31	66 - 33	1	
	95-960007-33	66 - 34	1	
	95-960007-35	66 - 7	1	
	95-960007-37	66 - 15	1	
	95-960007-39	66 - 30	1	
	95-960007-41	66 - 31	1	
	95-960007-43	66 - 26	1	
	95-960007-49	66 - 19	1	
	95-960011-1	56	1	
	95-960011-13	56 - 6	2	
	95-960011-17	56 - 15	2	
	95-960011-2	56	1	
	95-960011-21	56 - 5	1	
	95-960011-23	56	1	
	95-960011-3	56 - 1	1	
	95-960011-4	56	1	
	95-960011-5	56 - 3	1	
	95-960011-6	56	1	
	95-960011-601	56	1	

	PART NUMBER	FIGURE AND INDEX NO.	QTY. PER ARTI-CLE	
	95-960011-602	56	1	
	95-960011-7	56 - 4	2	
	95-960014	65 - 3	1	
	95-960015	66 - 48	1	
	95-970000	67	1	
	95-970000-1	67 - 39	1	
	95-970000-101	67 - 54	1	
	95-970000-105	67 - 37	1	
	95-970000-107	67 - 14	1	
	95-970000-11	67 - 15	2	
	95-970000-113	67 - 49	1	
	95-970000-115	67 - 51	1	
	95-970000-119	67 - 28	1	
	95-970000-121	67 - 29	1	
	95-970000-123	67 - 59	1	
	95-970000-125	67	1	
	95-970000-127	67	1	
	95-970000-135	67 - 68	1	
	95-970000-137	67 - 67	1	
	95-970000-139	67 - 69	1	
	95-970000-141	67 - 62	1	
	95-970000-143	67 - 66	1	
	95-970000-145	67	1	
	95-970000-147	67	1	
	95-970000-149	67 - 13	2	
	95-970000-15	67 - 19	1	
	95-970000-151	67 - 71	1	
	95-970000-153	67	1	
	95-970000-154	67	1	
	95-970000-155	67 - 75	1	
	95-970000-157	67 - 76	1	
	95-970000-159	67 - 82	1	
	95-970000-16	67	1	
	95-970000-161	67 - 74	5	
	95-970000-163	67 - 80	1	
	95-970000-165	67 - 77	1	
	95-970000-167	67 - 83	1	
	95-970000-169	67 - 81	1	
	95-970000-17	67 - 21	1	
	95-970000-177	67	1	
	95-970000-187	67	1	
	95-970000-19	67 - 36	1	
	95-970000-21	67 - 35	1	
	95-970000-23	67 - 34	1	
	95-970000-27	67 - 26	1	
	95-970000-29	67 - 25	1	
	95-970000-33	67 - 20	1	
	95-970000-37	67 - 55	1	
	95-970000-5	67 - 8	2	
	95-970000-55	67 - 56	1	
	95-970000-57	67 - 17	2	
	95-970000-7	67 - 9	2	
	95-970000-87	67 - 47	1	
	95-970000-89	67 - 50	1	
	95-970000-9	67 - 10	2	
	95-970000-91	67 - 46	1	
	95-970000-93	67 - 44	1	
	95-970000-95	67 - 43	1	
	95-970000-97	67 - 41	1	
	95-970000-99	67 - 53	1	
	95-970012	61B- 5	1	
	95-970012	67 - 88	1	
	95-980001-1	18	1	
	95-980001-123	18	1	
	95-980001-124	18	1	
	95-980001-127	18 - 66C	1	
	95-980001-128	18	1	
	95-980001-143	18 - 66E	1	
	95-980001-144	18	1	
	95-980001-185	2 - 62	1	

	PART NUMBER	FIGURE AND INDEX NO.	QTY. PER ARTI-CLE	
	95-980001-185	18 - 61	1	
	95-980001-186	2 - 63	1	
	95-980001-186	18	1	
	95-980001-189	2 - 64	1	
	95-980001-189	18 - 65	1	
	95-980001-190	2 - 65	1	
	95-980001-190	18	1	
	95-980001-193	2 - 60	1	
	95-980001-193	18 - 63	1	
	95-980001-194	2 - 61	1	
	95-980001-194	18	1	
	95-980001-2	18	1	
	95-980001-33	18 -	1	
	95-980001-34	18	1	
	95-980001-53	18	1	
	95-980001-54	18	1	
	95-980001-601	18	1	
	95-980001-602	18	1	
	95-980001-61	3	1	
	95-980001-61	2 - 54	1	
	95-980001-62	3	1	
	95-980001-62	2 - 55	1	
	95-980001-63	3	1	
	95-980001-63	2 - 52	1	
	95-980001-64	3	1	
	95-980001-64	2 - 53	1	
	95-980001-67	18 - 67	1	
	95-980001-68	18	1	
	95-980001-81	2 - 56	1	
	95-980001-82	2 - 57	1	
	95-980001-83	3	1	
	95-980001-83	2 - 58	1	
	95-980001-84	3	1	
	95-980001-84	2 - 59	1	
	95-980001-89	2 - 66	1	
	95-980001-89	18 - 66A	1	
	95-980001-90	2 - 67	1	
	95-980001-90	18	1	
	95-980001-93	18 - 69	1	
	95-980001-94	18	1	
	95-980019	51 - 28	2	
	9520	49	2	
	9520	49A- 13	2	
	9520	62 - 66	1	
	954143	49J- 7	2	
	954162	49J- 6	2	
	96-110007-11	18	1	
	96-110007-12	18	1	
	96-110007-3	19A- 44	1	
	96-110007-4	19A	1	
	96-110007-5	19A- 45	1	
	96-110007-6	19A	1	
	96-300001-41	37H- 7	2	
	96-300001-41	37H- 21	2	
	96-324029-1	61C- 66	1	
	96-324029-5	61C- 44	1	
	96-324031	61C- 50	1	
	96-324031-1	61C	1	
	96-324032-3	61C	1	
	96-324033	61C	1	
	96-324033-1	61C- 25	1	
	96-324034-3	61C- 46	1	
	96-324034-5	61C	1	
	96-324035-1	58A	1	
	96-324035-13	58A	1	
	96-324035-15	58A- 93	1	
	96-324035-17	58A- 1	1	
	96-324035-18	58A	1	
	96-324035-23	58A	1	
	96-324035-25	58A- 85	1	

	PART NUMBER	FIGURE AND INDEX NO.	QTY. PER ARTI-CLE	
	96-324035-3	58A	1	
	96-324035-5	58A- 39	1	
	96-324035-7	58A- 40	1	
	96-324035-8	58A- 41	1	
	96-324035-9	58A- 95	1	
	96-324036-11	58A- 54	1	
	96-324036-11	61C- 43	1	
	96-324036-3	58A- 55	1	
	96-324036-5	58A- 56	2	
	96-324036-7	58A- 57	1	
	96-324037	58A- 42	1	
	96-324038-11	62A	1	
	96-324038-13	62A- 61	1	
	96-324038-27	62A- 52	1	
	96-324038-31	62A- 86	1	
	96-324038-33	62A- 84	1	
	96-324038-35	62A- 24	1	
	96-324038-37	62A- 22	1	
	96-324038-39	62A- 4	1	
	96-324038-5	62A- 26	1	
	96-324038-7	62A- 62	1	
	96-324038-9	62A	1	
	96-324043	58A- 58	1	
	96-324044	58A- 61	1	
	96-324045	58A- 62	1	
	96-324047	58A- 94	1	
	96-324048	58A- 64	1	
	96-324049	58A- 59	1	
	96-324050	58A- 63	1	
	96-324052	58A- 60	1	
	96-324068	67	1	
	96-324069	61C- 22	1	
	96-340025	61C- 2	1	
	96-360002-5	63 -120	1	
	96-364033	63	1	
	96-364033-1	62	1	
	96-364033-3	63	1	
	96-364033-5	63	1	
	96-364037	63	1	
	96-430010-11	11A- 7	1	
	96-430010-12	11A	1	
	96-430010-15	11A- 3	1	
	96-430010-16	11A	1	
	96-430010-17	11A- 2	1	
	96-430010-18	11A	1	
	96-430010-21	11A- 4	1	
	96-430010-22	11A	1	
	96-430010-23	11A- 1	1	
	96-430010-24	11A	1	
	96-430010-27	11A- 6	1	
	96-430010-28	11A	1	
	96-430010-29	11A- 5	1	
	96-430010-30	11A	1	
	96-430010-53	11A- 8	2	
	96-430010-65	11A	1	
	96-430011-17	9	1	
	96-430011-19	9 - 5	1	
	96-430011-21	9	1	
	96-430011-23	9	1	
	96-430011-25	9 - 9	1	
	96-524011	60	1	
	96-524017	58A	1	
	96-524017	59	1	
	96-524017-1	59	1	
	96-524017-3	59	1	
	96-524017-5	59	1	
	96-524017-7	59	1	
	96-530001-105	14B- 16	1	
	96-530001-11	14B- 58	1	
	96-530001-11	14C- 7	1	

	PART NUMBER	FIGURE AND INDEX NO.	QTY. PER ARTI-CLE	
	96-530001-113	14C- 44	1	
	96-530001-117	14C- 45	1	
	96-530001-127	14B- 3	2	
	96-530001-127	14C- 47	2	
	96-530001-129	14B- 4	2	
	96-530001-129	14C- 48	2	
	96-530001-13	14B- 57	1	
	96-530001-13	14C- 8	1	
	96-530001-135	14C- 51	1	
	96-530001-137	14B- 55	1	
	96-530001-147	14B- 35	1	
	96-530001-147	14C- 36	1	
	96-530001-161	14C- 4	1	
	96-530001-17	14B- 72	1	
	96-530001-173	14C- 15	1	
	96-530001-177	14C- 26	1	
	96-530001-209	14B- 36	1	
	96-530001-209	14C- 29	1	
	96-530001-219	14B- 64	1	
	96-530001-219	14C- 10	1	
	96-530001-220	14B- 65	1	
	96-530001-220	14C- 20	1	
	96-530001-221	14B- 66	2	
	96-530001-221	14C- 9	1	
	96-530001-221	14C- 18	1	
	96-530001-227	14B- 18	1	
	96-530001-229	14B- 45	1	
	96-530001-23	14B- 46	1	
	96-530001-25	14B- 48	1	
	96-530001-25	14C- 12	1	
	96-530001-27	14B- 51	1	
	96-530001-27	14C- 11	1	
	96-530001-331	14C- 52	4	
	96-530001-35	14C- 30	1	
	96-530001-39	14C- 31	1	
	96-530001-41	14B- 40	1	
	96-530001-41	14C- 32	1	
	96-530001-43	14B- 42	1	
	96-530001-43	14C- 33	1	
	96-530001-45	14B- 37	1	
	96-530001-51	14B- 33	1	
	96-530001-57	14B- 32	1	
	96-530001-57	14C- 35	1	
	96-530001-615	12B- 21	1	
	96-530001-65	14B- 17	1	
	96-530001-67	14B- 21	1	
	96-530001-67	14C- 27	1	
	96-530001-69	14B- 23	1	
	96-530001-69	14C- 28	1	
	96-530001-73	14C- 25	1	
	96-530001-75	14B- 15	1	
	96-530001-79	14B- 9	1	
	96-530001-79	14C- 19	1	
	96-530001-85	14B- 8	1	
	96-530001-85	14C- 17	1	
	96-530001-89	14C- 16	1	
	96-530001-9	14C- 5	1	
	96-530002-15	14C- 41	1	
	96-530002-37	14C- 57	1	
	96-530002-47	14C- 6	1	
	96-530002-53	14C- 34	1	
	96-530002-53	14C- 43	1	
	96-530002-55	14C	1	
	96-530002-61	14C- 46	1	
	96-530002-63	14C- 50	1	
	96-530002-65	14C- 49	1	
	96-530002-75	14C-104	1	
	96-530002-79	14C-105	1	
	96-530002-9	14C- 24	1	
	96-530003-55	14B- 31	1	

PART NUMBER	FIGURE AND INDEX NO.	QTY. PER ARTICLE
96-530003-59	14B- 30	1
96-530004-11	14C- 21	1
96-530004-21	14C- 31	1
96-530004-31	14C- 22	1
96-530013-19	14C- 79	1
96-530013-33	14C- 80	3
96-530013-35	14C	3
96-534010	14B-114	4
96-534010-601	12B- 10	1
96-534010-602	12B	1
96-534010-603	12B	1
96-534010-604	12B	1
96-534011-3	14B- 5	1
96-534013-11	13C- 47	1
96-534013-11	14C- 93	2
96-534013-12	13C	1
96-534013-17	12B- 13	1
96-534013-19	12B- 14	1
96-534016-1	13C- 38	4
96-534016-1	14C- 91	4
96-534016-3	12B	1
96-534017-21	13C- 46	2
96-534017-25	13C- 45	2
96-534017-33	13C	1
96-534017-34	13C- 42	1
96-534017-7	13C- 48	1
96-534017-8	13C	1
96-534020-1	13C- 40	4
96-534020-1	41C-107	1
96-534024-1	14C- 53	1
96-534024-3	14C	1
96-534024-33	14C- 54	1
96-534024-34	14C	1
96-534026	14C- 38	1
96-534027	12B- 12	1
96-534028	14C	1
96-534043	6 - 9	2
96-534046	6	1
96-534046	14B- 63	1
96-550010-1	48A-124	1
96-560001-35	64 - 30	1
96-560001-37	64 - 33	1
96-560001-39	64 - 34	1
96-560001-41	64 - 14	1
96-560001-45	64 - 22	1
96-560001-59	64 - 51	1
96-560001-77	64 - 18	1
96-560011-1	64 - 25	1
96-560011-3	64 - 28	1
96-810010	36A	1
96-810011	36A	1
96-820011	41A- 57A	1
96-920001-1	57C- 4	2
96-920001-10	57D	1
96-920001-100	57C	1
96-920001-101	57C	1
96-920001-103	57A- 13	1
96-920001-104	57A	1
96-920001-105	57A- 21	2
96-920001-107	57A	1
96-920001-107	57D- 7	1
96-920001-11	57C- 18	1
96-920001-11	57D- 75	1
96-920001-111	57A- 27	2
96-920001-111	57D- 17	2
96-920001-113	57A- 25	2
96-920001-113	57D- 22	2
96-920001-115	57A- 28	2
96-920001-115	57D- 15	2
96-920001-12	57D	1

PART NUMBER	FIGURE AND INDEX NO.	QTY. PER ARTICLE
96-920001-125	57B- 25	2
96-920001-127	57A	1
96-920001-127	57D- 13	1
96-920001-13	57C- 19	1
96-920001-13	57D- 77	1
96-920001-131	57B	1
96-920001-133	57A- 15	1
96-920001-134	57A	1
96-920001-135	57A- 7	1
96-920001-136	57A	1
96-920001-137	57A- 5	1
96-920001-139	57A- 11	1
96-920001-14	57C	1
96-920001-140	57A	1
96-920001-15	57C- 20	1
96-920001-153	57B- 6	1
96-920001-154	57B	1
96-920001-16	57C	1
96-920001-163	57D- 62	2
96-920001-171	57A	1
96-920001-171	57D- 55	1
96-920001-175	57C- 10	1
96-920001-175	57D- 66	1
96-920001-176	57C	1
96-920001-176	57D	1
96-920001-177	57D- 64	1
96-920001-178	57D	1
96-920001-183	57B- 13	2
96-920001-185	57B- 10	1
96-920001-186	57B	1
96-920001-187	57B- 12	2
96-920001-189	57D- 98	2
96-920001-191	57D- 97	2
96-920001-205	57A	1
96-920001-206	57A	1
96-920001-207	57A	1
96-920001-208	57A	1
96-920001-209	57A	1
96-920001-209	57A	1
96-920001-21	57A- 24	1
96-920001-210	57A	1
96-920001-210	57A	1
96-920001-213	57D- 24	1
96-920001-214	57D	1
96-920001-215	57D- 32	1
96-920001-216	57D	1
96-920001-22	57A	1
96-920001-229	57D- 30	2
96-920001-23	57A- 12	1
96-920001-235	57D- 36	2
96-920001-24	57A	1
96-920001-243	57D- 79	1
96-920001-244	57D	1
96-920001-253	57D- 50	1
96-920001-255	57D	1
96-920001-257	57D- 48	1
96-920001-259	57D	1
96-920001-3	57C- 3	2
96-920001-33	57A	1
96-920001-33	57D- 53	1
96-920001-35	57B	1
96-920001-37	57A- 34	1
96-920001-38	57A	1
96-920001-39	57A- 35	1
96-920001-40	57A	1
96-920001-45	57A- 36	1
96-920001-45	57D- 52	1
96-920001-47	57A- 30	1
96-920001-47	57D- 4	1
96-920001-49	57B	1

	PART NUMBER	FIGURE AND INDEX NO.	QTY. PER ARTI-CLE	
	96-920001-5	57C- 2	1	
	96-920001-50	57B	1	
	96-920001-57	57B- 3	1	
	96-920001-58	57B	1	
	96-920001-59	57A- 31	1	
	96-920001-59	57D- 6	1	
	96-920001-61	57D- 71	1	
	96-920001-62	57D	1	
	96-920001-63	57C- 5	2	
	96-920001-69	57B- 8	1	
	96-920001-7	57C- 7	1	
	96-920001-70	57B	1	
	96-920001-71	57B- 7	1	
	96-920001-72	57B	1	
	96-920001-73	57B- 5	1	
	96-920001-77	57B- 9	1	
	96-920001-79	57B- 23	2	
	96-920001-79	57D- 99	2	
	96-920001-8	57C	1	
	96-920001-81	57C- 12	1	
	96-920001-81	57D- 68	1	
	96-920001-82	57C	1	
	96-920001-82	57D	1	
	96-920001-87	57C- 22	1	
	96-920001-88	57C	1	
	96-920001-89	57A- 29	1	
	96-920001-89	57D- 14	1	
	96-920001-9	57D- 81	1	
	96-920001-95	57C- 8	1	
	96-920001-96	57C	1	
	96-920001-97	57C- 17	2	
	96-920001-97	57D- 73	2	

	PART NUMBER	FIGURE AND INDEX NO.	QTY. PER ARTI-CLE	
	96-920001-99	57C- 15	1	
	96-920011-11	57D-101	1	
	96-920011-5	57D	1	
	96-920011-7	57D	1	
	96-920013	14B-106	1	
	96-920013	14C- 83	1	
	96-920015	57A	2	
	96-924010	57B- 19	2	
	98-264-2-110	51	64	
	98264-2-110	51	64	
	98265-1-.130	53 - 3	8	
	98265-1-.130	53A- 16	8	
	98265-1-.150	53	2	
	98265-1-.150	53A	2	
	98265-1-080	8 - 63	4	
	98265-1-080	8 - 66	14	
	98265-1-080	8 - 69	16	
	98265-1-090	66 - 20	1	
	98265-2-.210	53	2	
	98265-2-.210	53A	2	
	98292-2-170	17 - 19	3	
	99785-2	51	64	
	99833P098	66	1	
	99836	8 - 32	1	
	99836	8 - 64	4	
	99836	8 - 67	14	
	99836	8 - 70	16	
	99836	17	3	
	99836	53	12	
	99836	53A	12	
	99836	66	1	

FIGURE NO.	PART NO.	DESCRIPTION 1 2 3 4 5 6 7
9	35-410070-604	DOOR ASSEMBLY,BAGGAGE
	35-410070-6	• PAN
	35-410070-8	• SKIN
	35-410070-10	• HINGE
	35-410070-38	• REINFORCEMENT
	35-410214	• STOP
	35-410070-44	• REINFORCEMENT
	35-410070-16	• BLOCK
	35-410070-12	• HINGE
	35-410070-14	• PIN
	AN545-6-4	• SCREW
10	95-420012-601	FRAME & WINDOW ASSEMBLY,CABIN DOOR
	35-400010-58	• PANEL
	35-400010-4	• SKIN
	35-400010-6	• FRAME
	35-400010-8	• REINFORCEMENT
	35-400010-14	• REINFORCEMENT
	35-400010-18	• REINFORCEMENT
	AN3-4A	• BOLT
	AN960-10	• WASHER
	AN365-1032	• NUT
	AN507-1032-R20	• SCREW
	AN507-832-R7	• SCREW
	35-400032-2	• SUPPORT
	35-400029-2	• REINFORCEMENT
	95-420012-7	• BRACKET
	35-400029-4	• GUIDE
	35-400414	• GUIDE
	50-400356	• LATCH ASSEMBLY
	AN365-832	• NUT
	AN960-8L	• WASHER
	AN960-10	• WASHER
	100942-041-008-116-37	• SPRING
	AN525-832-R6	• SCREW
	AN507-832-6	• SCREW
	AN525-10-10	• SCREW
	AN665-21R	• CLEVIS
	AN365-1032	• NUT
	AN365-632	• NUT
	PK84-X-A-4-4	• SCREW
	AN507-1032-R10	• SCREW
	68A7-82	• NUT
	AN507-440-R-4	• SCREW
	AN507-832-R8	• SCREW
	AN393-37	• PIN
	AN526-832-8	• SCREW
	35-400395	• PLATE
	35-400014-601	• HANDLE ASSEMBLY
	35-400404	• SEAL
	35-400036	• SUPPORT
	AN366F832	• PLATE NUT
	35-400010-42	• BRAZE ASSEMBLY
	35-400461-2	• TUBE
	35-400461-4	• ADAPTER
	A6200-62-1	• NUT
	AN507-440-R-6	• SCREW
	35-400462	• STOP
	35-400464-4	• SHAFT ASSEMBLY
	35-400417	• BOLT
	52-012-062-0375	• ROLL PIN
	AN393-57	• PIN
	AN960-10L	• WASHER
	AN380-2-2	• PIN
	AN960-10	• WASHER
	AN507-632-6	• SCREW

FIGURE NO.	PART NO.	DESCRIPTION 1 2 3 4 5 6 7
	AN365-632	• NUT
	AN507-1032-R14	• SCREW
	AN742-4	• CLAMP
	AN520-10-8	• SCREW
	100942-041-008-023-17	• SPRING
	AN392-13	• PIN
	AN960-6	• WASHER
	AN960-416L	• WASHER
	AN366F632	• PLATE NUT
	AN365-1032	• NUT
	35-400435	• PLATE ASSEMBLY
	35-400041	• LINK
	102933-S4-0312-0093	• SPACER
	100951-CR-020-020-030	• WASHER
	5171	• SPRING
	AN3-10A	• BOLT
	AN507-836-6	• SCREW
	AN507-1032R6	• SCREW
	AN960-10	• WASHER
	AN365-1032	• PLATE NUT
	35-400010-28	• STIFFENER
	35-400320-32	• SASH ASSEMBLY
	AN507-632-R6	• SCREW
	35-410315	• CLIP
	35-400320-20	• MOULDING
	35-400320-52	• CLIP
	35-400439-1	• HANDLE
	35-400437	• LATCH
	35-400467-3	• BUSHING
	NAS452-6K-161	• RIVNUT
	35-400465	• PIN
	35-400434	• SPRING
	NAS387-632-10P	• SCREW
	102809-A187-024	• PIN
	AN507-632-R-10	• SCREW
	AN507-832-8	• SCREW
	AN960-10	• WASHER
	2037	• HANDLE ASSEMBLY
	AN365-1032	• NUT
	AN742-4	• CLAMP
	AN507-832R8	• SCREW
	AN960-8	• WASHER
	AN365-832	• NUT
	35-534251	• BRACKET ASSEMBLY,ARM REST
11	35-410291-628	WINDOW ASSEMBLY,FWD CABIN TINTED
	35-410291-22	• FRAME
	35-410291-24	• RETAINER
	35-410291-134	• GLASS
	35-410291-88	• HINGE
	35-410318	• STRIKE
	35-410324	• SLEEVE ASSEMBLY
	35-410325	• ROD
	102933-S4-0437-0140	• SPACER
	102933-S4-0437-0159	• SPACER
	102809-A093-011	• PIN
	1100801-X2-0062	• BUSHING
	100801-X2-0097	• BUSHING
	AN526-832R7	• SCREW
	22TM82	• NUT
	AN960-8L	• WASHER

FIGURE NO.	PART NO.	DESCRIPTION 1 2 3 4 5 6 7
11	35-410291-626	WINDOW ASSEMBLY,TINTED STORM
	35-410291-100	. REINFORCEMENT
	35-410291-84	. FRAME
	35-410291-82	. RETAINER
	35-410291-138	. GLASS
	35-410291-94	. SPACER
	35-410321 SA2	. LATCH ASSEMBLY
	35-410291-90	. HINGE
	8005	. HANDLE
	1450-156	. KIT,HANDLE
11	35-410321-602	LATCH ASSEMBLY,STORM WINDOW
	35-410322	. PLATE
	112144	. SHAFT
12	35-534369-601	STRUCTURE ASSEMBLY,FRONT SEAT BOTTOM LH
	35-534369-602	STRUCTURE ASSEMBLY,FRONT SEAT BOTTOM RH
	35-534369-3	. WELD ASSEMBLY
	35-534369-605	. WELD ASSEMBLY
	35-534369-606	. WELD ASSEMBLY
	35-534369-57	. BLOCK
	35-534369-59	. BLOCK
	35-534369-29	. LEVER ASSEMBLY
	100942-040-006-012-8	. SPRING
	AN960-10L	. WASHER
	AN364-1032	. NUT
	35-534367	. CAM
	AN392-21	. PIN
	AN381-2-6	. COTTER PIN
	AN960-4	. WASHER
	35-534335-3	. ROD
	35-534335-4	. ROD
	35-534369-47	. SPRING
	35-534358-48	. SPRING
	50-022-094-0437	. PIN
	59-028-125-0625	. PIN
	AN392-23	. PIN
	AN381-2-6	. COTTER PIN
	900-2	. STRAP ASSEMBLY
	AN526-10-16	. SCREW
	35-534370-1	. LEVER ASSEMBLY
	102933-S4-0312-0156	. SPACER
	35-534370-2	. LEVER ASSEMBLY
	35-534334-3	. TUBE
	35-534334-4	. TUBE
13	35-534360-601	STRUCTURE ASSEMBLY,REAR SEAT BOTTOM
	35-534360-3	. TUBE
	35-534360-37	. TUBE
	35-534360-38	. TUBE
	35-534360-39	. TUBE
	35-534360-41	. GUSSET
	35-534360-42	. GUSSET
	35-534360-45	. TUBE
	35-534360-47	. TUBE

FIGURE NO.	PART NO.	DESCRIPTION 1 2 3 4 5 6 7
	35-534360-49	• GUSSET
	35-534360-51	• TUBE
	35-534360-53	• BRACKET
	35-534360-54	• BRACKET
	35-534360-55	• BRACKET
	35-534360-56	• BRACKET
	35-534360-57	• PIN
	35-534360-61	• TUBE
	35-534360-63	• REINFORCEMENT
	35-534360-65	• REINFORCEMENT
	35-534360-89	• ROD
	35-534360-69	• PIN
	35-534360-91	• ROD
	35-534360-603	• GUSSET ASSEMBLY
	35-534360-604	• GUSSET ASSEMBLY
	100951-X-125-016-100NC	• WASHER
13	35-534360-607	BACK ASSEMBLY,REAR SEAT
	35-534360-606	• STRUCTURE ASSEMBLY
	35-534360-29	• MOULDING
	900-2	• STRAP
	NO NUMBER	• RIVNUT
	NO NUMBER	• RIVET
13	50-534269-615	HARNESS ASSEMBLY,REAR SEAT
	113675	• FITTING
	113642	• PLACARD
	D611A	• BELT TIP
	NO NUMBER	• NYLON WEBBING
14	35-534304-642	PILLOW ASSEMBLY,LH
	35-534304-643	PILLOW ASSEMBLY,RH
	35-534360-79	• SUPPORT
	NO NUMBER	• LEATHER
	NO NUMBER	• MUSLIN
	NO NUMBER	• KAPOK
	AN227-6	• BUTTON
	AN227-7B	• SOCKET
	AN227-8B	• STUD
	AN227-9B	• EYELET
17	95-440005-602	STRUCTURE ASSEMBLY,AFT FUSELAGE
	95-440005-609	• SKIN ASSEMBLY
	95-440005-604	• SKIN ASSEMBLY
	95-440005-606	• SKIN ASSEMBLY
	95-440005-607	• DOUBLER ASSEMBLY
	95-440005-608	• DOUBLER ASSEMBLY
	95-440005-614	• CHANNEL ASSEMBLY
	45-410204-5	• SKIN
	95-440005-45	• STRINGER
	45-410204-9	• STRINGER
	45-410204-10	• STRINGER
	45-410204-11	• STRINGER
	45-410204-12	• STRINGER

FIGURE NO.	PART NO.	DESCRIPTION 1 2 3 4 5 6 7
	45-410204-13	• STRINGER
	45-410204-14	• STRINGER
	45-410204-19	• STRINGER
	45-410204-20	• STRINGER
	45-410204-31	• BRACKET
	45-410204-32	• BRACKET
	45-410075	• CHANNEL
	45-410075-1	• CHANNEL
	45-410023	• BRACKET
	95-440012	• SUPPORT
	35-400213	• SUPPORT
	AN507-1032	• SCREW
	AN365-1032	• NUT
	AN960-10L	• WASHER
	95-440005-23	• BULKHEAD ASSEMBLY
	95-440005-37	• BULKHEAD ASSEMBLY
	45-410372	• BULKHEAD ASSEMBLY
	95-440005-612	• BULKHEAD ASSEMBLY
	95-440005-616	• BULKHEAD ASSEMBLY
	45-410177	• ANGLE
	95-524017-10	• CHANNEL ASSEMBLY
	95-524017-11	• CHANNEL ASSEMBLY
	95-524017-12	• BRACKET ASSEMBLY
	95-524017-8	• TUBE
	HM-6	• ROD END
	AN316-6R	• NUT
	AN960-616	• WASHER
	AN6-25/M/	• BOLT
	AN310-6/M/	• NUT
	AN380-2-3	• COTTER PIN
	AN960-616	• WASHER
	95-524011	• BELLCRANK ASSEMBLY
	AN24-26/M/	• CLEVIS BOLT
	AN310-4/M/	• NUT
	AN380-2-2	• COTTER PIN
	AN960-416L	• WASHER
	45-524040-602	• HINGE ASSEMBLY
	AN4-7A/M/	• BOLT
	AN365-428/M/	• NUT
	AN960-416L	• WASHER
	95-524035-1	• ARM ASSEMBLY
	AN4-15/M/	• BOLT
	AN310-4/M/	• NUT
	AN520-10	• SCREW
	AN380-2-2	• COTTER PIN
	AN900-416L	• WASHER
	45-524621	• SHIM
	95-524019	• DOWN SPRING
	AN3-10A/M/	• BOLT
	AN3-7/M/	• BOLT
	AN960-10	• WASHER
	AN365-1032	• NUT
	105739X-ZM-0187	• BUSHING BEARING
	100696-X08-06-003	• SPACER
	105739-X0190-0281-0230	• ROLLER
	100696-X10-08-005	• SPACER
	105739-X-ZZ-015	• BUSHING BEARING
	95-524017-22	• ARM ASSEMBLY
	95-524017-26	• CLIP
	AN520-R10	• SCREW
	100696-X08-06-006	• SPACER
	AN365-1032	• NUT
	AN960-10	• WASHER

FIGURE NO.	PART NO.	DESCRIPTION 1 2 3 4 5 6 7
	95-524017-25	. CLIP
	105739X-ZM-0093	. BUSHING BEARING
	NAS304-35-0564	. ELEVATOR CABLE ASSEMBLY
	AN23-13/M/	. BOLT
	AN320-3/M/	. NUT
	AN960-416L	. WASHER
	AN380-2-3	. PIN
	NAS304-35-0564	. ELEVATOR CABLE ASSEMBLY
	AN23-13/M/	. BOLT
	AN320-3/M/	. NUT
	AN960-416L	. WASHER
	AN380-2-3	. PIN
	AN210-4B	. PULLEY
	AN4-10A/M/	. BOLT
	95-524001-9	. LH RUDDER CABLE ASSEMBLY
	95-524001-13	. RH RUDDER CABLE ASSEMBLY
	AN502-10-10	. SCREW
	AN960-416	. WASHER
	AN365-428/M/	. NUT
	NAS427K10	. PIN
	AN210-2B	. PULLEY
	AN3-11A/M/	. BOLT
	AN960-10	. WASHER
	AN365-1032/M/	. NUT
	NAS427K11	. PIN
18	95-110005-605	WING ASSEMBLY,COMPLETE LH
	95-110005-606	WING ASSEMBLY,COMPLETE RH
	95-980001-601	. NACELLE ASSEMBLY,LH
	95-980001-602	. NACELLE ASSEMBLY,RH
	95-980001-161	. . LH FORMER
	95-980001-162	. . RH FORMER
	AN366F832	. . PLATE NUT
	95-980001-13	. . LH WEB
	95-980001-14	. . RH WEB
	95-980001-15	. . LH WEB
	95-980001-16	. . RH WEB
	AN366F832	. . PLATE NUT
	95-980001-157	. . LH FORMER
	95-980001-158	. . RH FORMER
	95-980001-603	. . LH FIREWALL ASSEMBLY
	95-980001-604	. . RH FIREWALL ASSEMBLY
	AN743-13	. . BRACKET
	95-980001-35	. . LH FORMER
	95-980001-36	. . RH FORMER
	95-980001-37	. . LH WEB
	95-980001-38	. . RH WEB
	95-980001-39	. . LH WEB
	95-980001-40	. . RH WEB
	AN366-428	. . PLATE NUT
	AN366F832	. . PLATE NUT
	95-980001-47	. . LH FORMER
	95-980001-48	. . RH FORMER
	AN366F832	. . PLATE NUT
	95-980001-163	. . LH FORMER
	95-980001-164	. . RH FORMER
	AN366F832	. . PLATE NUT
	95-980001-175	. . SPREADER
	95-980001-159	. . LH FORMER
	95-980001-160	. . RH FORMER
	95-980001-73	. . SPREADER
	AN366F832	. . PLATE NUT
	95-980001-75	. . LH FORMER
	95-980001-76	. . RH FORMER
	95-980001-79	. . SPREADER
	AN366F832	. . PLATE NUT

FIGURE NO.	PART NO.	1	2	3	4	5	6	7	DESCRIPTION
	95-980001-85		•	•					LH FORMER
	95-980001-86		•	•					RH FORMER
	AN366F832		•	•					PLATE NUT
	95-980001-99		•	•					SPREADER
	95-980001-125		•	•					LH COLLAR
	95-980001-126		•	•					RH COLLAR
	95-980001-129		•	•					LH ANGLE
	95-980001-130		•	•					RH ANGLE
	AN366F832		•	•					PLATE NUT
	95-980001-131		•	•					LH ANGLE
	95-980001-132		•	•					RH ANGLE
	AN366F832		•	•					PLATE NUT
	95-980001-133		•	•					LH ANGLE
	95-980001-134		•	•					RH ANGLE
	AN366F832		•	•					PLATE NUT
	95-980001-151		•	•					FORMER
	95-980001-135		•	•					FORMER
	95-980015-1		•	•					LUG
	ALPPH-T6-5		•	•					HUCK BOLT
	LC-C6		•	•					COLLAR
	95-980015-3		•	•					LUG
	ALPPH-T6-6		•	•					HUCK BOLT
	LC-C6		•	•					COLLAR
	95-910001-91		•	•					ANGLE
	AN366DF1032		•	•					PLATE NUT
	AN366F832		•	•					PLATE NUT
	95-910001-111		•	•					LH ANGLE
	95-910001-112		•	•					RH ANGLE
	203886-2		•	•					LH FITTING
	95-324018-137		•	•					LH SPACER
	AN515-8		•	•					LH SCREW
	AN515-832		•	•					LH NUT
	AN822-10D		•	•					ELBOW
	AN3435-2-10		•	•					TERMINAL STRIP
	AN3437-1-11		•	•					INSULATION STRIP
	AN3432-6-12		•	•					STUD
	AN960-6		•	•					WASHER
	AN341-6		•	•					NUT
	AN515-4		•	•					SCREW
	AN935-4L		•	•					WASHER
	AN340-4		•	•					NUT
	AN960-4L		•	•					WASHER
	112436-6		•	•					RETAINER
	112149-20		•	•					GROMMET
	AN515-R6		•	•					SCREW
	95-110005-607		•						SPAR & LEADING EDGE ASSEMBLY,LH FRONT
	95-110005-608		•						SPAR & LEADING EDGE ASSEMBLY,RH FRONT
	95-110013-1		•	•					SPAR ASSEMBLY,LH FRONT
	95-110013-2		•	•					SPAR ASSEMBLY,RH FRONT
	95-110015-601		•	•					EDGE ASSEMBLY,LH INBOARD LEADING
	95-110015-602		•	•					EDGE ASSEMBLY,RH INBOARD LEADING
	95-110015-613		•	•	•				LH LINER ASSEMBLY
	95-110015-614		•	•	•				RH LINER ASSEMBLY
	AN507-632-8		•	•	•				SCREW
	95-110015-609		•	•	•				LH RIB ASSEMBLY
	95-110015-610		•	•	•				RH RIB ASSEMBLY
	95-110015-619		•	•	•				LH SPAR ASSEMBLY
	95-110015-620		•	•	•				RH SPAR ASSEMBLY
	AN931-4-7		•	•	•				GROMMET
	45-115089-33		•	•	•				CHANNEL
	45-115004-57		•	•	•				SPACER
	22A38-82		•	•	•				NUT PLATE
	22A17-82		•	•	•				NUT PLATE
	AN366-F832		•	•	•				NUT PLATE
	95-110015-113		•	•	•				LH LINER ASSEMBLY
	95-110015-114		•	•	•				RH LINER ASSEMBLY
	50-110080		•	•	•				LH LINER ASSEMBLY
	50-110080-1		•	•	•				RH LINER ASSEMBLY

FIGURE NO.	PART NO.	1 2 3 4 5 6 7	DESCRIPTION
	45-115053	. . .	CLIP ASSEMBLY
	50-110010-18	. . .	LH HINGE
	50-110010-19	. . .	RH HINGE
	50-110010-20	. . .	LH HINGE
	50-110010-21	. . .	RH HINGE
	50-110010-34	. . .	SUPPORT
	50-110010-36	. . .	SUPPORT
	50-110010-50	. . .	LH STRINGER
	50-110010-51	. . .	RH STRINGER
	50-110010-52	. . .	LH STRINGER
	50-110010-53	. . .	RH STRINGER
	50-110010-54	. . .	LH STRINGER
	50-110010-55	. . .	RH STRINGER
	50-110010-88	. . .	ANGLE
	22A38-82	. . .	NUT PLATE
	22A24-82	. . .	NUT PLATE
	50-110010-131	. . .	RH REINFORCEMENT
	95-110015-9	. . .	LH FORMER
	95-110015-10	. . .	RH FORMER
	95-110015-11	. . .	LH FORMER
	95-110015-13	. . .	LH FORMER
	95-110015-14	. . .	RH FORMER
	95-110015-15	. . .	LH FORMER
	95-110015-16	. . .	RH FORMER
	95-110015-17	. . .	LH FORMER
	95-110015-18	. . .	RH FORMER
	95-110015-19	. . .	LH FORMER
	95-110015-20	. . .	RH FORMER
	95-110015-21	. . .	LH FORMER
	95-110015-22	. . .	RH FORMER
	95-110015-23	. . .	LH FORMER
	95-110015-24	. . .	RH FORMER
	95-110015-25	. . .	LH FORMER
	95-110015-26	. . .	RH FORMER
	AN366-1032	. . .	PLATE NUT
	95-110015-27	. . .	LH FORMER
	95-110015-28	. . .	RH FORMER
	95-110015-29	. . .	LH FORMER
	95-110015-30	. . .	RH FORMER
	95-110015-31	. . .	LH FORMER
	95-110015-32	. . .	RH FORMER
	95-110015-35	. . .	LH LINER
	95-110015-36	. . .	RH LINER
	95-110015-72	. . .	RH FORMER
	95-110015-101	. . .	LH SKIN
	95-110015-102	. . .	RH SKIN
	AN509-832	. . .	SCREW
	95-110015-5	. . .	LH SKIN
	95-110015-103	. . .	LH SKIN
	95-110015-6	. . .	RH SKIN
	95-110015-104	. . .	RH SKIN
	AN366F832	. . .	PLATE NUT
	95-110015-105	. . .	LH ANGLE
	95-110015-106	. . .	RH ANGLE
	95-110015-107	. . .	LH SKIN
	95-110015-108	. . .	RH SKIN
	AN509-832	. . .	SCREW
	95-110015-33	. . .	LH SKIN
	95-110015-109	. . .	LH SKIN
	95-110015-34	. . .	RH SKIN
	95-110015-110	. . .	RH SKIN
	22NA17A-82	. . .	PLATE NUT
	AN366F832	. . .	PLATE NUT
	95-110015-115	. . .	LH DOUBLER
	95-110015-116	. . .	RH DOUBLER
	22NA17A-82	. . .	PLATE NUT

FIGURE NO.	PART NO.	1	2	3	4	5	6	7	DESCRIPTION
	95-110015-117	•	•	•					LH DOUBLER
	95-110015-118	•	•	•					RH DOUBLER
	22NA17A-82	•	•	•					PLATE NUT
	50-110046-10	•	•	•					LH ANGLE
	50-110046-11	•	•	•					RH ANGLE
	50-110056	•	•	•					LH GUSSET
	50-110056-1	•	•	•					RH GUSSET
	50-110062	•	•	•					LH GUSSET
	50-110062-1	•	•	•					RH GUSSET
	50-110086-1	•	•	•					LH LINER
	50-110086-2	•	•	•					RH LINER
	35-115028-9	•	•	•					RH ANGLE
	35-115028-11	•	•	•					RH ANGLE
	35-115166-4	•	•	•					LH ANGLE
	35-115166-5	•	•	•					RH ANGLE
	35-115212	•	•	•					LH CLIP
	35-115212-1	•	•	•					RH CLIP
	35-115213	•	•	•					RH CLIP
	35-115213-1	•	•	•					RH CLIP
	35-115214	•	•	•					RH CLIP
	35-115383-2	•	•	•					LH RIB
	35-115383-5	•	•	•					RH RIB
	35-115383-3	•	•	•					RH RIB
	95-110015-603	•	•						EDGE ASSEMBLY,LH OUTBOARD LEADING
	95-110015-604	•	•						EDGE ASSEMBLY,RH OUTBOARD LEADING
	95-110015-83	•	•	•					LH RIB ASSEMBLY
	95-110015-84	•	•	•					RH RIB ASSEMBLY
	95-110015-97	•	•	•					LH RIB ASSEMBLY
	95-110015-98	•	•	•					RH RIB ASSEMBLY
	95-110015-617	•	•	•					LH RIB ASSEMBLY
	95-110015-611	•	•	•					LH SUPPORT ASSEMBLY
	95-110015-612	•	•	•					RH SUPPORT ASSEMBLY
	95-110015-163	•	•	•					LH RIB ASSEMBLY
	95-110015-164	•	•	•					RH RIB ASSEMBLY
	95-110015-131	•	•	•					LH RIB ASSEMBLY
	95-110015-132	•	•	•					RH RIB ASSEMBLY
	45-115032-602	•	•	•					RH RIB ASSEMBLY
	35-115034	•	•	•					LH RIB ASSEMBLY
	35-115034-1	•	•	•					LH RIB ASSEMBLY
	35-115035	•	•	•					LH RIB ASSEMBLY
	95-110015-153	•	•	•					LH RIB ASSEMBLY
	95-110015-154	•	•	•					LH RIB ASSEMBLY
	95-110015-155	•	•	•					LH RIB ASSEMBLY
	95-110015-156	•	•	•					RH RIB ASSEMBLY
	95-110015-135	•	•	•					LH RIB ASSEMBLY
	95-110015-136	•	•	•					RH RIB ASSEMBLY
	95-110015-157	•	•	•					LH RIB ASSEMBLY
	95-110015-158	•	•	•					RH RIB ASSEMBLY
	45-115077-2	•	•	•					RH RIB ASSEMBLY
	95-110015-121	•	•	•					LH DOUBLER ASSEMBLY
	50-110010-28	•	•	•					LH HINGE
	50-110010-29	•	•	•					RH HINGE
	50-110010-30	•	•	•					LH HINGE
	50-110010-31	•	•	•					RH HINGE
	50-110010-94	•	•	•					LH STRINGER
	50-110010-95	•	•	•					RH STRINGER
	95-110015-45	•	•	•					LH SKIN
	95-110015-46	•	•	•					RH SKIN
	95-110015-55	•	•	•					LH STRINGER
	95-110015-56	•	•	•					RH STRINGER
	95-110015-57	•	•	•					LH STRINGER
	95-110015-58	•	•	•					RH STRINGER
	95-110015-99	•	•	•					RH STRINGER
	95-110015-100	•	•	•					RH STRINGER
	95-110015-149	•	•	•					LH STRINGER
	95-110015-150	•	•	•					RH STRINGER

FIGURE NO.	PART NO.	DESCRIPTION 1 2 3 4 5 6 7
	95-110015-95	• • • LH SPAR
	95-110015-96	• • • RH SPAR
	95-110015-87	• • • LH SKIN
	35-115211-9	• • • RH SKIN
	AN366F632	• • • LH NUT PLATE
	35-361025 SA2	• • • LH WIRE ASSEMBLY
	AN515-6-5	• • • LH SCREW
	AN960-6	• • • LH WASHER
	AN365-632	• • • LH NUT
	95-110015-81	• • LH RIB ASSEMBLY
	95-110015-82	• • RH RIB ASSEMBLY
	105774-C-069-18700	• • HINGE
	AN515-8R	• • SCREW
	AN525-832R	• • SCREW
	NAS220	• • SCREW
	AN960-8	• • WASHER
	AN365-832	• • NUT
	50-110010-48	• • SPLICE
	50-110010-49	• • SPLICE
	50-110010-92	• • LH SPLICE
	50-110010-93	• • RH SPLICE
	95-110015-75	• • LH DOUBLER
	95-110015-76	• • RH DOUBLER
	95-110015-137	• • LH ANGLE
	95-110015-138	• • RH ANGLE
	95-110015-93	• • LH SPLICE
	95-110015-94	• • RH SPLICE
	B111745X	• • GROUNDING JACK
	AN960-616L	• • WASHER
	95-110014-691	• WING ASSEMBLY,LH /LESS FRONT SPAR & LEADING EDGE/
	95-110014-692	• WING ASSEMBLY,RH /LESS FRONT SPAR & LEADING EDGE/
	95-110014-603	• • LH PANEL ASSEMBLY
	95-110014-604	• • RH PANEL ASSEMBLY
	95-110014-605	• • SPAR & TRAILING EDGE ASSEMBLY,REAR LH
	95-110014-606	• • SPAR & TRAILING EDGE ASSEMBLY,REAR RH
	95-110014-621	• • SKIN ASSEMBLY,LOWER TRAILING EDGE INBOARD L
	95-110014-622	• • SKIN ASSEMBLY,LOWER TRAILING EDGE INBOARD R
	95-110014-645	• • SKIN ASSEMBLY,LOWER TRAILING EDGE INBD LH
	95-110014-646	• • SKIN ASSEMBLY,LOWER TRAILING EDGE INBD RH
	95-110014-629	• • LINER ASSEMBLY,TOP LH
	95-110014-630	• • LINER ASSEMBLY,TOP RH
	95-110014-631	• • LINER ASSEMBLY,TOP LH
	95-110014-632	• • LINER ASSEMBLY,TOP RH
	95-110014-633	• • LINER ASSEMBLY,TOP LH
	95-110014-634	• • LINER ASSEMBLY,TOP RH
	95-110014-657	• • LH FORMER ASSEMBLY
	95-110014-658	• • RH FORMER ASSEMBLY
	35-115194-31	• • RH SKIN
	35-115194-33	• • RH SKIN
	WIS632	• • RH NUT PLATE
	95-110014-69	• • LH CHANNEL
	95-110014-70	• • RH CHANNEL
	95-110014-87	• • LH FORMER
	95-110014-88	• • RH FORMER
	95-110014-97	• • LH CHANNEL
	95-110014-98	• • RH CHANNEL
	95-110014-179	• • LH FORMER
	95-110014-180	• • RH FORMER
	95-110014-185	• • LH FORMER
	95-110014-186	• • RH FORMER
	95-110014-283	• • LH CHANNEL
	WIS832-BC100	• • LH PLATE NUT
	95-110014-284	• • RH CHANNEL
	95-110014-301	• • FORMER
	95-110014-309	• • LH FORMER

FIGURE NO.	PART NO.	1	2	3	4	5	6	7	DESCRIPTION
	95-110014-310	•	•						RH FORMER
	95-110014-311	•	•						LH FORMER
	95-110014-312	•	•						RH FORMER
	95-110014-313	•	•						LH FORMER
	95-110014-314	•	•						RH FORMER
	95-110014-315	•	•						LH RIB
	95-110014-316	•	•						RH RIB
	95-110014-317	•	•						LH RIB
	95-110014-318	•	•						RH RIB
	95-110014-3	•	•						LH FRONT LINER
	95-110014-4	•	•						RH FRONT LINER
	95-110014-11	•	•						LH FRONT LINER
	95-110014-12	•	•						RH FRONT LINER
	95-110014-17	•	•						LH FRONT LINER
	95-110014-18	•	•						RH FRONT LINER
	95-110014-9	•	•						LH AFT LINER
	95-110014-10	•	•						RH AFT LINER
	95-110014-13	•	•						LH AFT LINER
	95-110014-14	•	•						RH AFT LINER
	95-110014-15	•	•						LH AFT LINER
	95-110014-16	•	•						RH AFT LINER
	95-110014-7	•	•						LH BOTTOM LINER
	95-110014-8	•	•						RH BOTTOM LINER
	95-110014-23	•	•						LH BOTTOM LINER
	95-110014-24	•	•						RH BOTTOM LINER
	95-110014-19	•	•						LH BOTTOM LINER
	95-110014-20	•	•						RH BOTTOM LINER
	95-110014-234	•	•						GUSSET
	50-110002-122	•	•						LH ANGLE
	50-110002-123	•	•						RH ANGLE
	50-110002-132	•	•						LH ANGLE
	50-110002-133	•	•						RH ANGLE
	95-110014-65	•	•						LH ANGLE
	95-110014-66	•	•						RH ANGLE
	95-110014-83	•	•						LH ANGLE
	95-110014-84	•	•						RH ANGLE
	95-110014-93	•	•						LH ANGLE
	95-110014-94	•	•						RH ANGLE
	95-110014-189	•	•						LH ANGLE
	95-110014-190	•	•						RH ANGLE
	95-110014-285	•	•						LH ANGLE
	95-110014-286	•	•						RH ANGLE
	95-110014-325	•	•						STIFFENER
	95-110014-327	•	•						STIFFENER
	95-110014-329	•	•						STIFFENER
	95-110014-331	•	•						STIFFENER
	95-110014-333	•	•						STIFFENER
	50-920077	•	•						FLANGE ASSEMBLY
	35-115269	•	•						LH CLIP
	108424-2	•	•						CLIP
	35-115270	•	•						LH CLIP
	35-115270-1	•	•						RH CLIP
	108424-4	•	•						LH CLIP
	9-50727	•	•						PLUG BUTTON
	AN931-4-7	•	•						GROMMET
	50-110002-136	•	•						LH ANGLE
	50-110002-137	•	•						RH ANGLE
	50-110002-138	•	•						LH ANGLE
	50-110002-139	•	•						RH ANGLE
	50-110002-140	•	•						HINGE
	50-110002-150	•	•						LH DOUBLER
	50-110002-151	•	•						RH DOUBLER
	AN366F1032	•	•						NUT PLATE
	AN3-8A	•	•						BOLT
	95-110014-337	•	•						LH CLIP
	95-110014-343	•	•						LH STIFFENER
	95-110014-344	•	•						RH STIFFENER

FIGURE NO.	PART NO.	DESCRIPTION 1 2 3 4 5 6 7
	95-110014-345	• • CLIP
	108424-2	• • CLIP
	95-110014-349	• • LH CLIP
	95-110014-350	• • RH CLIP
	108424-2	• • CLIP
	AN931-4-7	• • LH GROMMET
	95-110023-27	• • FAIRLEAD
	95-521000-601	• • LH BELLCRANK ASSEMBLY
	95-521000-602	• • RH BELLCRANK ASSEMBLY
	35-521158-2	• • • BELLCRANK
	35-521158-3	• • • BELLCRANK
	105740-X0190-0252-0190	• • • BUSHING
	AR4	• • • BEARING
	AN316-5R	• • • NUT
	S-185-111-003	• • • BOLT
	AN320-4	• • • NUT
	AN960-416L	• • • WASHER
	AN380-2-2	• • • PIN
	AN960-10L	• • • WASHER
	AN320-3	• • • NUT
	AN380-2-2	• • • PIN
	35-521152-4	• • • TUBE
	HM-4	• • • ROD END
	AN316-4R	• • • CHECK NUT
	35-521190	• • • FITTING
	HML-4	• • • ROD END
	35-521186	• • • BOLT
	35-521187	• • • BOLT
	AN316-4L	• • • CHECK NUT
	AN4-16A	• • BOLT
	AN365-428	• • NUT
	AN960-416	• • WASHER
	NAS305-34-0652	• • CABLE ASSEMBLY
	NAS305-35-0672	• • CABLE ASSEMBLY
	35-521181	• • FAIRLEAD
	AN24-12	• • BOLT
	AN960-416L	• • WASHER
	AN320-4	• • NUT
	AN380-2-2	• • PIN
	AN515-8R10	• • SCREW
	AN960-8	• • WASHER
	115005-5	• • GROMMET
	115005-10	• • LH GROMMET
	45-521011	• • LH BRACKET ASSEMBLY
	45-526008	• • LH BRACKET
	AN3-5/M/	• • LH BOLT
	AN960-10L	• • LH WASHER
	AN960-10	• • LH WASHER
	AN365-1032/M/	• • LH NUT
	AN515-8R6	• • LH SCREW
	AN210-1B	• • LH PULLEY
	AN3-6A/M/	• • LH BOLT
	AN3-7A/M/	• • LH BOLT
	AN960-10L	• • LH WASHER
	AN960-10	• • LH WASHER
	AN365-1032/M/	• • LH NUT
	95-521000-9	• • LH BRACKET
	95-521000-11	• • LH BRACKET
	AN210-1B	• • LH PULLEY
	AN3-6A/M/	• • LH BOLT
	AN960-10	• • LH WASHER
	AN392-17	• • LH PIN
	AN380-2-2	• • LH PIN
	AN365-1032/M/	• • LH NUT
	95-521000-31	• • LH BRACKET
	45-521112	• • LH BRACKET

FIGURE NO.	PART NO.	1	2	3	4	5	6	7	DESCRIPTION
	45-521113		•	•					LH BRACKET
	AN210-1B		•	•					LH PULLEY
	AN3-6A/M/		•	•					LH BOLT
	AN960-10		•	•					LH WASHER
	AN960-10L		•	•					LH WASHER
	AN365-1032/M/		•	•					LH NUT
	AN392-17		•	•					LH PIN
	AN380-2-2		•	•					LH PIN
	95-521000-29		•	•					BRACKET
	AN210-3B		•	•					PULLEY
	AN4-10A/M/		•	•					BOLT
	AN960-416		•	•					WASHER
	AN365-428/M/		•	•					NUT
	AN392-19		•	•					PIN
	AN380-2-2		•	•					PIN
	95-521000-33		•	•					LH CHAIN ASSEMBLY
	115005-1		•	•					LH GROMMET
	115005-6		•	•					LH GROMMET
	95-920001-117		•	•					SUPPORT,AUXILIARY
	95-920001-97		•	•					TUBE,AUXILIARY
	106200H-4		•	•					HOSE,AUXILIARY
	AN737RM-22		•	•					CLAMP,AUXILIARY
	95-324018-3		•	•					LH TUBE ASSEMBLY
	95-324018-143		•	•					LH TUBING
	MS25083-1BA6		•	•					JUMPER
	AN507-632R		•	•					SCREW
	AN960-6		•	•					WASHER
	AN365-632		•	•					NUT
	95-360011-601		•	•					LH WIRE HARNESS
	95-360011-602		•	•					RH WIRE HARNESS
	105774-C-069-18700		•						HINGE PIN
	AN515-8R		•						SCREW
	AN3-4A		•						BOLT
	AN960-10		•						WASHER
	AN365-1032		•						NUT
	AN525-832R		•						SCREW
	NAS220		•						SCREW
	AN960-8		•						WASHER
	AN365-832		•						NUT
	111722-03408		•						EXTRUSION
	115092-10500		•						EXTRUSION
	95-170000-63		•						LH COVER ASSEMBLY
	95-170000-64		•						RH COVER ASSEMBLY
	103637		•						PLACARD
	49384		•						FASTENER
	AN960-8		•						WASHER
	45-115053		•						CLIP ASSEMBLY
	35-115200-20		•						SEAL
	35-115200-22		•						SEAL
	35-115200-24		•						SEAL
	35-115200-26		•						SEAL
	35-115301-44		•						SEAL
	ALPPH-T6-4		•						HUCK BOLT
	LC-C6		•						COLLAR
	AN4-6A		•						BOLT
	AN4-7A		•						BOLT
	AN365-428		•						NUT
	AN960-418		•						WASHER
	95-980001-17		•						LH FORWARD TIE
	95-980001-18		•						RH FORWARD TIE
	95-980001-173		•						LH TEE
	95-980001-174		•						RH TEE
	AN525-10		•						SCREW

FIGURE NO.	PART NO.	DESCRIPTION 1 2 3 4 5 6 7
	95-980001-41	• LH FORWARD TIE
	95-980001-42	• RH FORWARD TIE
	95-980001-49	• LH NOSE TIE
	95-980001-50	• RH NOSE TIE
	95-980001-155	• LH NOSE TIE
	95-980001-156	• RH NOSE TIE
	95-980001-169	• CLIP
	95-980001-61	• LH CENTER SKIN
	95-980001-62	• RH CENTER SKIN
	95-980001-63	• LH INBOARD SKIN
	95-980001-64	• RH INBOARD SKIN
	AN366F1032	• PLATE NUT
	95-980001-67	• LH ATTACH ANGLE
	95-980001-68	• RH ATTACH ANGLE
	95-980001-167	• CLIP
	95-980001-165	• CLIP
	95-980001-81	• LH CAP
	95-980001-82	• RH CAP
	95-980001-83	• LH OUTBOARD SKIN
	95-980001-84	• RH OUTBOARD SKIN
	AN366F1032	• PLATE NUT
	95-980001-181	• CLIP
	95-980001-87	• CLIP
	95-980001-89	• LH FAIRING
	95-980001-90	• RH FAIRING
	AN525-10	• SCREW
	95-980001-91	• LH ATTACH ANGLE
	95-980001-92	• RH ATTACH ANGLE
	95-980001-93	• LH ATTACH ANGLE
	95-980001-94	• RH ATTACH ANGLE
	AN525-10	• SCREW
	95-980001-153	• LH TEE
	95-980001-95	• LH TEE
	95-980001-154	• RH TEE
	95-980001-96	• RH TEE
	AN525-10	• SCREW
	95-980001-171	• FILLER
	95-980001-121	• FILLER
	95-980001-127	• LH TROUGH
	95-980001-128	• RH TROUGH
	AN525-10	• SCREW
	AN362C1032	• PLATE NUT
	95-980001-149	• LH ANGLE
	95-980001-137	• LH ANGLE
	95-980001-150	• RH ANGLE
	95-980001-138	• RH ANGLE
	AN366F832	• PLATE NUT
	95-098005-135	• LH TIE
	95-098005-136	• RH TIE
	95-098005-137	• LH TIE
	95-098005-138	• RH TIE
	95-980001-139	• LH TIE
	95-980001-140	• RH TIE
	95-980001-141	• LH TIE
	95-980001-142	• RH TIE
	95-980001-143	• LH ATTACH ANGLE
	95-980001-144	• RH ATTACH ANGLE
	AN366-1032	• PLATE NUT
	AN525-10	• SCREW
	95-980001-177	• LH ATTACH ANGLE
	95-980001-178	• RH ATTACH ANGLE
	AN525-10	• SCREW
	95-980001-179	• LH BRACKET
	95-980001-180	• RH BRACKET
	95-980016-1	• LUG
	95-980016-2	• LUG
	95-980016-3	• LUG
	95-980016-4	• LUG

FIGURE NO.	PART NO.	DESCRIPTION 1 2 3 4 5 6 7
	95-980017-1	• LUG
	95-980017-2	• LUG
	ALPPH-T6-5	• HUCK BOLT
	LC-C6	• COLLAR
	MS20004-14	• BOLT
	MS20004-16	• BOLT
	AN365-428	• NUT
	95-980018	• PLACARD DIRECT SCREEN
	95-110038-3	• LH INBOARD WELD ASSEMBLY
	95-110038-4	• RH INBOARD WELD ASSEMBLY
	AN525-10R	• SCREW
	95-110038-5	• LH OUTBOARD WELD ASSEMBLY
	95-110038-6	• RH OUTBOARD WELD ASSEMBLY
	AN525-10R	• SCREW
	95-980001-161	• LH FORMER
	95-980001-162	• RH FORMER
	95-980001-157	• LH FORMER
	95-980001-158	• RH FORMER
	95-980001-163	• LH FORMER
	95-980001-164	• RH FORMER
	95-980001-159	• LH FORMER
	95-980001-160	• RH FORMER
	95-910001-53	• LH BRACKET
	95-910001-54	• RH BRACKET
	AN931-3-5	• GROMMET
	95-910001-43	• BRACKET
	95-920001-89	• BRACKET
	95-920001-93	• CLIP
19	95-110014-601	WING ASSEMBLY,LH /LESS FRONT SPAR & LEADING EDGE/
	95-110014-602	WING ASSEMBLY,RH /LESS FRONT SPAR & LEADING EDGE/
	95-110014-603	• LH PANEL ASSEMBLY
	95-110014-604	• RH PANEL ASSEMBLY
	95-110014-605	• SPAR & TAILING EDGE ASSEMBLY,LH REAR
	95-110014-606	• SPAR & TAILING EDGE ASSEMBLY,RH REAR
	95-110014-621	• SKIN ASSEMBLY,LOWER TRAILING EDGE INBOARD LH
	95-110014-622	• SKIN ASSEMBLY,LOWER TRAILING EDGE INBOARD RH
	95-110014-645	• LH FORMER ASSEMBLY
	95-110014-646	• RH FORMER ASSEMBLY
	95-110014-629	• LH TOP LINER ASSEMBLY
	95-110014-630	• RH TOP LINER ASSEMBLY
	95-110014-631	• LH TOP LINER ASSEMBLY
	95-110014-632	• RH TOP LINER ASSEMBLY
	95-110014-633	• LH TOP LINER ASSEMBLY
	95-110014-634	• RH TOP LINER ASSEMBLY
	95-110014-657	• LH FORMER ASSEMBLY
	95-110014-658	• LH FORMER ASSEMBLY
	35-115194-31	• RH SKIN
	35-115194-33	• RH SKIN
	WIS632	• RH NUT PLATE
	95-110014-69	• LH CHANNEL
	95-110014-70	• RH CHANNEL
	95-110014-87	• LH FORMER
	95-110014-88	• RH FORMER
	95-110014-97	• LH CHANNEL
	95-110014-98	• RH CHANNEL
	95-110014-179	• LH FORMER
	95-110014-180	• RH FORMER
	95-110014-185	• LH FORMER
	95-110014-186	• RH FORMER
	95-110014-283	• LH CHANNEL
	WIS832-BC100	• LH PLATE NUT

FIGURE NO.	PART NO.	DESCRIPTION 1 2 3 4 5 6 7
	95-110014-284	• RH CHANNEL
	95-110014-301	• FORMER
	95-110014-309	• LH FORMER
	95-110014-310	• RH FORMER
	95-110014-311	• LH FORMER
	95-110014-312	• RH FORMER
	95-110014-313	• LH FORMER
	95-110014-314	• RH FORMER
	95-110014-315	• LH RIB
	95-110014-316	• RH RIB
	95-110014-317	• LH RIB
	95-110014-318	• RH RIB
	95-110014-3	• LH FRONT LINER
	95-110014-4	• RH FRONT LINER
	95-110014-11	• LH FRONT LINER
	95-110014-12	• RH FRONT LINER
	95-110014-17	• LH FRONT LINER
	95-110014-18	• RH FRONT LINER
	95-110014-9	• LH AFT LINER
	95-110014-10	• RH AFT LINER
	95-110014-13	• LH AFT LINER
	95-110014-14	• RH AFT LINER
	95-110014-15	• LH AFT LINER
	95-110014-16	• RH AFT LINER
	95-110014-7	• LH BOTTOM LINER
	95-110014-8	• RH BOTTOM LINER
	95-110014-23	• LH BOTTOM LINER
	95-110014-24	• RH BOTTOM LINER
	95-110014-19	• LH BOTTOM LINER
	95-110014-20	• RH BOTTOM LINER
	95-110014-234	• GUSSET
	50-110002-122	• LH ANGLE
	50-110002-123	• RH ANGLE
	50-110002-132	• LH ANGLE
	50-110002-133	• RH ANGLE
	95-110014-65	• LH ANGLE
	95-110014-66	• RH ANGLE
	95-110014-83	• LH ANGLE
	95-110014-84	• RH ANGLE
	95-110014-93	• LH ANGLE
	95-110014-94	• RH ANGLE
	95-110014-189	• LH ANGLE
	95-110014-190	• RH ANGLE
	95-110014-285	• LH ANGLE
	95-110014-286	• RH ANGLE
	95-110014-325	• STIFFENER
	95-110014-327	• STIFFENER
	95-110014-329	• STIFFENER
	95-110014-331	• STIFFENER
	95-110014-333	• STIFFENER
	50-920077	• FLANGE ASSEMBLY
	35-115269	• LH CLIP
	108424-2	• CLIP
	35-115270	• LH CLIP
	35-115270-1	• RH CLIP
	108424-4	• LH CLIP
	9-50727	• PLUG BUTTON
	AN931-4-7	• GROMMET
	50-110014-653	• LH DOOR ASSEMBLY
	50-110014-654	• RH DOOR ASSEMBLY
	50-110002-136	• LH ANGLE
	50-110002-137	• RH ANGLE
	50-110002-138	• LH ANGLE
	50-110002-139	• RH ANGLE
	50-110002-140	• HINGE
	50-110002-150	• LH DOUBLER
	50-110002-151	• RH DOUBLER

FIGURE NO.	PART NO.	DESCRIPTION 1 2 3 4 5 6 7
	102361-00228	• PIN
	AN366F1032	• NUT PLATE
	AN3-8A	• BOLT
	95-110014-337	• LH CLIP
	95-110014-343	• LH STIFFENER
	95-110014-344	• RH STIFFENER
	95-110014-345	• CLIP
	108424-2	• CLIP
	95-110014-349	• LH CLIP
	95-110014-350	• RH CLIP
	08424-2	• CLIP
	AN931-4-7	• LH GROMMET
	45-521212 SA4	• LH FLAP ACTUATOR
	45-521212 SA5	• RH FLAP ACTUATOR
	AN960-416L	• WASHER
	AN364-428	• NUT
	AN4-5A	• BOLT
	105739-S0257-0343-0230	• BUSHING
	AN742D9C	• CLAMP
	AN960-10L	• WASHER
	AN365-1032	• NUT
	AN931-8-13	• GROMMET
	95-110023-27	• FAIRLEAD
	95-521000-601	• LH BELLCRANK ASSEMBLY
	95-521000-602	• RH BELLCRANK ASSEMBLY
	AN4-16	• BOLT
	AN320-4	• NUT
	AN960-416	• WASHER
	NAS305-34-0652	• CABLE ASSEMBLY
	NAS305-35-0672	• CABLE ASSEMBLY
	35-521181	• FAIRLEAD
	AN24-12	• BOLT
	AN960-416L	• WASHER
	AN320-4	• NUT
	AN380-2-2	• PIN
	AN515-8R10	• SCREW
	AN960-8	• WASHER
	115005-5	• GROMMET
	115005-10	• LH GROMMET
	45-521011	• LH BRACKET ASSEMBLY
	45-526008	• LH BRACKET
	AN3-5A/M/	• LH BOLT
	AN960-10L	• LH WASHER
	AN960-10	• LH WASHER
	AN365-1032/M/	• LH NUT
	AN515-8R6	• LH SCREW
	AN210-1B	• LH PULLEY
	95-521000-603	• LH ACTUATOR ASSEMBLY
	AN3-6A/M/	• LH BOLT
	AN3-7A/M/	• LH BOLT
	AN960-10L	• LH WASHER
	AN960-10	• LH WASHER
	AN365-1032/M/	• LH NUT
	95-521000-9	• LH BRACKET
	95-521000-11	• LH BRACKET
	AN210-1B	• LH PULLEY
	AN3-6A/M/	• LH BOLT
	AN960-10	• LH WASHER
	AN392-17	• LH PIN
	AN380-2-2	• LH PIN
	AN365-1032/M/	• LH NUT
	AN3-6A/M/	• LH BOLT
	AN3-7A/M/	• LH BOLT
	AN960-10L	• LH WASHER
	AN960-10	• LH WASHER
	95-521000-31	• LH BRACKET

FIGURE NO.	PART NO.	DESCRIPTION 1 2 3 4 5 6 7
	45-521112	• LH BRACKET
	45-521113	• LH BRACKET
	AN210-1B	• LH PULLEY
	AN3-6A/M/	• LH BOLT
	AN960-10	• LH WASHER
	AN960-10L	• LH WASHER
	AN365-1032/M/	• LH NUT
	AN392-17	• LH PIN
	AN380-2-2	• LH PIN
	95-521000-29	• BRACKET
	AN210-3B	• PULLEY
	AN4-10A/M/	• BOLT
	AN960-416	• WASHER
	AN365-428/M/	• NUT
	AN392-19	• PIN
	AN380-2-2	• PIN
	95-521000-33	• LH CHAIN ASSEMBLY
	115005-1	• LH GROMMET
	115005-6	• LH GROMMET
	95-920011-1	• CELL,AUXILIARY FUEL LH
	95-920011-2	• CELL,AUXILIARY FUEL RH
	95-369010-1	• TRANSMITTER,AUXILIARY LH
	95-369010-2	• TRANSMITTER,AUXILIARY RH
	95-369010-3	• TRANSMITTER,AUXILIARY LH
	95-369010-4	• TRANSMITTER,AUXILIARY RH
	AN502-10	• SCREW,AUXILIARY
	95-920001-117	• SUPPORT,AUXILIARY
	AN737-30	• CLAMP,AUXILIARY
	35-921153-31	• BRACKET,AUXILIARY SUPPORT
	50-920064	• STRAINER ASSEMBLY,AUXILIARY
	35-921503	• GASKET,AUXILIARY
	MS21919DG17	• CLAMP,AUXILIARY
	AN520-10	• SCREW,AUXILIARY
	AN960-10	• WASHER,AUXILIARY
	AN365-1032	• NUT,AUXILIARY
	95-920001-9	• TUBE ASSEMBLY,AUXILIARY LH
	95-920001-10	• TUBE ASSEMBLY,AUXILIARY RH
	AN737RM-22	• CLAMP,AUXILIARY
	95-920001-11	• TUBE ASSEMBLY,AUXILIARY LH
	95-920001-12	• TUBE ASSEMBLY,AUXILIARY RH
	95-920001-13	• TUBE ASSEMBLY,AUXILIARY LH
	95-920001-14	• TUBE ASSEMBLY,AUXILIARY RH
	AN824-4D	• TEE,AUXILIARY
	1111-517700	• CHECK VALVE,AUXILIARY
	95-920001-15	• TUBE ASSEMBLY,AUXILIARY LH
	95-920001-16	• TUBE ASSEMBLY,AUXILIARY RH
	106200H-4	• HOSE,AUXILIARY
	AN737RM-22	• CLAMP,AUXILIARY
	95-920001-97	• TUBE,AUXILIARY
	106200H-4	• HOSE,AUXILIARY
	AN737RM-22	• CLAMP,AUXILIARY
	95-920001-99	• LH TUBE,AUXILIARY
	95-920001-100	• RH TUBE,AUXILIARY
	AN931-4-7	• GROMMET,AUXILIARY
	95-920001-87	• TUBE ASSY,AUXILIARY LH
	95-920001-88	• TUBE ASSY,AUXILIARY RH
	AN737RM-22	• CLAMP,AUXILIARY
	AN931-4-7	• GROMMET,AUXILIARY
	CCA4850	• VALVE,AUXILIARY
	AN822-4D	• NIPPLE,AUXILIARY
	AN910-1D	• COUPLING,AUXILIARY
	95-920001-37	• TUBE ASSEMBLY,AUXILIARY LH
	95-920001-38	• TUBE ASSEMBLY,AUXILIARY RH
	AN815-6D	• NIPPLE,AUXILIARY
	95-920001-39	• TUBE ASSEMBLY,AUXILIARY LH
	95-920001-40	• TUBE ASSEMBLY,AUXILIARY RH
	AN832-6D	• UNION,AUXILIARY

FIGURE NO.	PART NO.	DESCRIPTION 1 2 3 4 5 6 7
	AN924-6D	• NUT,AUXILIARY
	50-921518	• ADAPTER ASSEMBLY,AUXILIARY
	35-921502	• GASKET,AUXILIARY
	AN74-3	• BOLT,AUXILIARY
	AN960-416L	• WASHER,AUXILIARY
	AN509-1032R9	• SCREW,AUXILIARY
	416-85-31	• CAP ASSEMBLY,AUXILIARY
	416-25-31	• CAP ASSEMBLY,AUXILIARY
	50-921520	• COVER,AUXILIARY
	50-921521	• GASKET,AUXILIARY
	AN74-4	• BOLT,AUXILIARY
	AN960-416L	• WASHER,AUXILIARY
	476411	• BOOST PUMP
	AN4	• BOLT
	AN960-416	• WASHER
	AN365-428	• NUT
	AN822-6-2D	• ELBOW
	95-920001-29	• LH TUBE ASSEMBLY
	95-920001-30	• RH TUBE ASSEMBLY
	AN821-6D	• ELBOW
	AN931-6-16	• GROMMET
	95-920001-32	• RH TUBE
	95-920001-31	• LH TUBE
	AN821-6D	• ELBOW
	AN931-6-16	• GROMMET
	AN824-6D	• TEE
	95-920001-33	• TUBE
	95-920001-35	• TUBE
	95-361016-601	• LH SWITCH ASSEMBLY
	95-361017-602	• RH SWITCH ASSEMBLY
	95-324018-3	• LH TUBE ASSEMBLY
	AN848-4D	• ELBOW
	95-324018-111	• LH TUBE ASSEMBLY
	95-324018-123	• RH TUBE ASSEMBLY
	95-324018-27	• LH TUBE ASSEMBLY
	95-324018-19	• RH TUBE ASSEMBLY
	95-324018-31	• LH TUBE ASSEMBLY
	95-324018-43	• RH TUBE ASSEMBLY
	95-324018-65	• LH TUBE
	95-324018-51	• TUBE ASSEMBLY
	AN931-A4-7	• GROMMET
	106200H-10-26	• HOSE
	AN737TW34	• CLAMP
	MS25083-1BA6	• JUMPER
	AN507-632R	• SCREW
	AN960-6	• WASHER
	AN365-632	• NUT
	95-360011-601	• LH WIRE HARNESS
	95-360011-602	• RH WIRE HARNESS
19	95-170000-601	TIP ASSEMBLY,LH WING
	95-170000-602	TIP ASSEMBLY,RH WING
	95-170000-3	• TOP SKIN
	95-170000-4	• TOP SKIN
	95-170000-5	• BOTTOM SKIN
	95-170000-6	• BOTTOM SKIN
	95-170000-7	• LEADING EDGE SKIN
	95-170000-8	• LEADING EDGE SKIN
	95-170000-9	• TOP SKIN
	95-170000-10	• TOP SKIN
	95-170000-11	• BOTTOM SKIN
	95-170000-12	• BOTTOM SKIN
	95-170000-15	• TOP DOUBLER
	95-170000-17	• BOTTOM DOUBLER

FIGURE NO.	PART NO.	DESCRIPTION 1 2 3 4 5 6 7
	95-170000-19	• RIB
	95-170000-20	• RIB
	95-170000-21	• RIB
	95-170000-22	• RIB
	95-170000-23	• RIB
	95-170000-24	• RIB
	95-170000-25	• RIB
	95-170000-26	• RIB
	95-170000-29	• RIB
	95-170000-30	• RIB
	95-170000-31	• SPAR
	95-170000-32	• SPAR
	95-170000-33	• SPAR
	95-170000-34	• SPAR
	95-170000-35	• TOP STRINGER
	95-170000-36	• TOP STRINGER
	95-170000-37	• BOTTOM STRINGER
	95-170000-38	• BOTTOM STRINGER
	95-170000-39	• TOP STRINGER
	95-170000-40	• TOP STRINGER
	95-170000-41	• BOTTOM STRINGER
	95-170000-42	• BOTTOM STRINGER
	95-170000-45	• CAP ASSEMBLY
	95-170000-46	• CAP ASSEMBLY
	95-170000-51	• ANGLE
	95-170000-52	• ANGLE
	95-170000-53	• ANGLE
	95-170000-54	• ANGLE
	95-170000-55	• ANGLE
	95-170000-56	• ANGLE
	95-170000-57	• ANGLE
	95-170000-65	• RIB
	95-170000-66	• RIB
	414-18-1500-53	• DOOR
	K2000-1032	• KAYLOCK
	K1000-1032	• KAYLOCK
	K1000-832	• KAYLOCK
	MK2000-632	• KAYLOCK
	AN515-8R-8	• SCREW
22	35-165050-605	FLAP ASSEMBLY,LH
	35-165050-606	FLAP ASSEMBLY,RH
	35-165050-30	• BRACKET
	35-165050-31	• BRACKET
	35-165050-34	• BRACKET
	35-165050-35	• BRACKET
	35-165050-68	• LH SPAR
	35-165050-69	• RH SPAR
	35-165051-8	• LH SKIN
	35-165051-9	• RH SKIN
	35-165050-74	• LH RIB
	35-165050-75	• RH RIB
	35-165050-76	• LH RIB
	35-165050-77	• RH RIB
	35-165050-84	• RIB
	35-165050-73	• RH CORRUGATION
	35-165050-81	• RH DOUBLER
	35-165050-40	• BRACKET
	35-165050-62	• ANGLE
	35-165050-63	• ANGLE
	35-165050-64	• ANGLE
	35-165050-65	• ANGLE
	35-165050-70	• LH SPACER
	35-165050-71	• RH SPACER

FIGURE NO.	PART NO.	DESCRIPTION 1 2 3 4 5 6 7
22-CONT	45-361119-1	. LH CAM
	50-160012-1	. LH RIB
	50-160012-2	. RH RIB
	50-160013-1	. LH RIB
	50-160013-2	. RH RIB
22	95-160000-601	FLAP ASSEMBLY,LH
	35-165050-76	. RIB
	35-165050-34	. BRACKET
	35-165050-65	. ANGLE
	35-165050-35	. BRACKET
	35-165050-64	. ANGLE
	50-160012-1	. RIB
	50-160013-1	. RIB
	35-165050-84	. RIB
	35-165050-40	. BRACKET
	35-165050-30	. BRACKET
	35-165050-31	. BRACKET
	35-165050-62	. ANGLE
	35-165050-63	. ANGLE
	45-361119-1	. CAM
	95-160000-3	. RIB
	95-160000-5	. RIB
	95-160000-7	. RIB
	95-160000-9	. RIB
	95-160000-11	. RIB
	95-160000-13	. RIB
	95-160000-15	. RIB
	95-160000-17	. RIB
	95-160000-19	. RIB
	95-160000-25	. RIB
	95-160000-27	. SKIN
	95-160000-29	. SKIN
	95-160000-33	. SKIN
	95-160000-37	. SPAR
	6P6P	. BONDING WIRE
	AN526-632-7	. SCREW
	AN960-6	. WASHER
	AN365-632	. NUT
	103637	. PLACARD
	49384	. FASTENER
22	95-160000-602	FLAP ASSEMBLY,RH
	35-165050-77	. RIB
	35-165050-34	. BRACKET
	35-165050-65	. ANGLE
	35-165050-35	. BRACKET
	35-165050-64	. ANGLE
	50-160012-2	. RIB
	50-160013-2	. RIB
	35-165050-84	. RIB
	35-165050-40	. BRACKET
	35-165050-30	. BRACKET
	35-165050-31	. BRACKET
	35-165050-62	. ANGLE
	35-165050-63	. ANGLE
	95-160000-4	. RIB
	95-160000-6	. RIB
	95-160000-8	. RIB
	95-160000-10	. RIB
	95-160000-12	. RIB

FIGURE NO.	PART NO.	1	2	3	4	5	6	7	DESCRIPTION
22-CONT	95-160000-14	•							RIB
	95-160000-18	•							RIB
	95-160000-20	•							SKIN
	95-160000-21	•							RIB
	95-160000-26	•							RIB
	95-160000-28	•							SKIN
	95-160000-30	•							SKIN
	95-160000-31	•							RIB
	95-160000-34	•							SKIN
	95-160000-35	•							DOUBLER
	95-160000-38	•							SPAR
	6P6P	•							BONDING WIRE
	AN526-632-7	•							SCREW
	AN960-6	•							WASHER
	AN365-632	•							NUT
	103637	•							PLACARD
	49324	•							FASTENER

FIGURE NO.	PART NO.	DESCRIPTION 1 2 3 4 5 6 7
27	95-620010-601	STABILIZER ASSEMBLY,HORIZONTAL LH
	95-620010-602	STABILIZER ASSEMBLY,HORIZONTAL RH
	95-620010-47	. LH SKIN
	95-620010-48	. RH SKIN
	95-620010-49	. LH SKIN
	95-620010-50	. RH SKIN
	45-620010-20	. DOUBLER
	A6914-1024	. PATCH PLATE
	95-620010-31	. CLIP
	45-620010-32	. REINFORCEMENT
	95-620010-35	. RIB
	45-620010-34	. REINFORCEMENT
	95-620010-29	. DOUBLER
	95-620010-30	. DOUBLER
	45-620010-35	. REINFORCEMENT
	45-620020	. COVER
	AN507-832-8	. SCREW
	45-620021-1	. CLAMP
	22A3-82	. NUT
	95-620010-19	. TIP
	95-620010-21	. LH SKIN
	95-620010-22	. RH SKIN
	35-650122-6	. HINGE ASSEMBLY
	103637	. PLACARD
	49384	. FASTENER
	103637	. PLACARD
	95-620010-607	. ACTUATOR ASSEMBLY,LH
	95-620010-608	. ACTUATOR ASSEMBLY,RH
	95-620010-5	. . RIB
	35-650005-45	. . ANGLE
	35-650005-46	. . ANGLE
	45-526008	. BRACKET
	45-526006-5	. PLATE ASSEMBLY
	AN3-3A	. BOLT
	AN960-10L	. WASHER
	35-650005-7	. LH STIFFENER
	35-650005-8	. RH STIFFENER
	45-526011	. CHAIN & CABLE ASSEMBLY
	95-620010-605	. SPAR,REAR LH
	95-620010-606	. SPAR,REAR RH
	A6K-75	. RIVNUT
	A6K-120	. BUSHING
	95-620010-3	. LH SKIN
	95-620010-4	. RH SKIN
	95-620010-7	. RIB
	95-620010-9	. RIB
	95-620010-11	. RIB
	95-620010-13	. RIB
	95-620010-15	. RIB
	45-620018-1	. RIB
	35-650009-30	. STIFFENER
	35-650005-33	. CLIP
	95-620010-53	. RIB
	95-620010-33	. EXTENSION
	35-650121-4	. HINGE ASSEMBLY
	95-620010-603	. SPAR,FRONT LH
	95-620010-604	. SPAR,FRONT RH
	AN366-F1032	. NUT
	35-620005-31	. RIB

FIGURE NO.	PART NO.	DESCRIPTION 1 2 3 4 5 6 7
27	95-620010-621	STABILIZER ASSY,HORIZONTAL LH
	95-620010-622	STABILIZER ASSY,HORIZONTAL RH
	95-620010-65	. LH SKIN
	95-620010-66	. RH SKIN
	95-620010-67	. LH SKIN
	95-620010-68	. RH SKIN
	45-620010-20	. DOUBLER
	A6914-1024	. PATCH PLATE
	95-620010-31	. CLIP
	95-620010-35	. RIB
	45-620010-34	. REINFORCEMENT
	95-620010-29	. DOUBLER
	95-620010-30	. DOUBLER
	45-620010-35	. REINFORCEMENT
	45-620020	. COVER
	AN507-832-8	. SCREW
	45-620021-1	. CLAMP
	22A3-82	. NUT
	95-620010-19	. TIP
	95-620010-21	. SKIN
	95-620010-22	. SKIN
	95-620010-62	. HINGE ASSY
	103637	. PLACARD
	49384	. FASTENER
	103637	. PLACARD
	95-620010-609	. ACTUATOR ASSY,HORIZONTAL STABILIZER LH
	95-620010-610	. ACTUATOR ASSY,HORIZONTAL STABILIZER RH
	45-524565-3	. . LH ACTUATOR ASSY
	45-524565-5	. . RH ACTUATOR ASSY
	45-526015	. . UNIVERSAL JOINT
	52-022-094-0562	. . ROLL PIN
	45-526007-1	. . TUBE
	52-022-094-0437	. . ROLL PIN
	45-526005-3	. . SPROCKET
	45-526008	. BRACKET
	95-620010-608	. RIB ASSY
	95-620010-5	. . RIB
	35-650005-45	. . ANGLE
	35-650005-46	. . ANGLE
	45-526006-5	. PLATE ASSY
	AN3-3A	. BOLT
	AN960-10L	. WASHER
	35-650005-7	. LH STIFFENER
	35-650005-8	. RH STIFFENER
	45-526011	. CHAIN & CABLE ASSY
	95-620010-605	. SPAR,REAR LH
	95-620010-606	. SPAR,REAR RH
	95-620010-43	. . SPAR
	95-620010-45	. . DOUBLER
	45-620011-4	. . BUSHING
	45-620011-30	. . DOUBLER
	MK1000-3	. . NUT PLATE
	A6K-75	. RIVNUT
	A6K-120	. BUSHING
	95-620010-69	. LH SKIN
	95-620010-70	. RH SKIN
	95-620010-7	. RIB
	95-620010-9	. RIB
	95-620010-11	. RIB
	95-620010-13	. RIB
	95-620010-15	. RIB
	95-620010-57	. RIB

FIGURE NO.	PART NO.	DESCRIPTION 1 2 3 4 5 6 7
27-CONT	35-650009-30	• STIFFENER
	95-620010-55	• CLIP
	95-620010-607	• RIB ASSY
	95-620010-53	• • RIB
	95-620010-3	• • EXTENSION
	35-650121-4	• • HINGE ASSY
	95-620010-603	• SPAR,FRONT LH
	95-620010-604	• SPAR,FRONT RH
	95-620010-39	• • SPAR
	95-620010-41	• • DOUBLER
	45-620011-12	• • BUSHING
	45-620025-13	• • BRACKET
	AN366F1032	• NUT
	35-650005-31	• RIB
	AN3-6A	• NUT
	AN960D10	• WASHER

FIGURE NO.	PART NO.	DESCRIPTION 1 2 3 4 5 6 7
28	95-640005-601	STABILIZER ASSEMBLY,VERTICAL
	95-640005-27	. SKIN
	95-640005-30	. SKIN
	95-640005-15	. LH SKIN
	95-640005-16	. RH SKIN
	95-640005-33	. SUB SPAR
	95-640005-21	. CHANNEL
	95-640005-23	. DOUBLER
	95-640005-25	. COVER
	AN366-F832	. NUT
	95-640005-19	. FORMER
	95-640005-17	. FORMER
	95-640005-35	. RIB
	45-640005-33	. FORMER
	45-640005-35	. FORMER
	95-640005-39	. CHANNEL
	AN366F1032	. NUT PLATE
	45-640005-37	. FORMER
	45-640005-39	. FORMER
	B55	. BEARING
	45-640005-53	. FORMER
	95-640005-602	. TIP ASSEMBLY
	AN366F832	. NUT
	95-640005-41	. ANGLE
	45-620018-1	. RIB
	45-640005-65	. REINFORCEMENT
	95-640005-31	. DOUBLER
	95-640005-32	. DOUBLER
	45-620020	. COVER
	45-620021-1	. CLAMP
	22A3-82	. NUT
	AN7510-1	. PLACARD
	AN366F-832	. PLATE NUT
	95-640005-1	. REAR SPAR
	95-640005-37	. DOUBLER
	AN373F1032	. NUT
	45-620011-2	. BUSHING
	45-640005-75	. RIB
	45-640005-41	. HINGE HALF
	95-640005-47	. HINGE HALF
	B55	. BEARING
	95-640005-45	. FRONT SPAR
	95-640005-43	. DOUBLER
	45-620011-4	. BUSHING
	95-640005-11	. NOSE SKIN
	45-620012-1	. RIB
	95-640005-3	. RIB
	95-640005-5	. RIB
	95-640005-7	. RIB
	95-640005-9	. RIB
	95-526012-1	. BRACKET
	95-526012-3	. BLOCK
	AN366F1032	. NUT
	95-526010-22	. CLIP
	AN741-D10	. CLAMP
	AN515-8R	. SCREW
	AN960-8	. WASHER
	AN365-832	. NUT
	95-524022-1	. SPROCKET
	95-526010-10	. TUBE
	52-022-094-6437	. PIN
	95-526011	. PLATE ASSY
	AN3-3A	. BOLT
	AN960-10L	. WASHER
	AN960-10	. WASHER
	AN320C3	. NUT

FIGURE NO.	PART NO.	DESCRIPTION 1 2 3 4 5 6 7
28-CONT	AN381-2-8	• PIN
	AN17306	• BOLT
	45-526015	• UNIVERSAL JOINT
	52-022-094-0562	• ROLL PIN
	45-344613	• BRACKET
	AN515-8R7	• SCREW
	AN366F832	• NUT PLATE
	AN173-6C	• BOLT
	NAS42HT-3-28	• SPACER
	AN960-10L	• WASHER
	AN960-10	• WASHER
	AN310-3	• NUT
	AN381-2-8	• PIN
	95-520011-601	• ACTUATOR ASSY
	45-524564	• • CHECK NUT
	95-524013	• • SCREW
	95-524014	• • NUT ASSEMBLY
	45-524561-3	• • HOUSING
	95-524012	• • BUSHING
	AN210KP6A	• • BEARING
	NAS50-87	• • RING
	AN6227-8	• • O RING
	NAS42HT-3-28	• • SPACER
	45-524626	• • BUSHING
	95-526010-16	• • ROD END
	95-526010-18	• • RIVET
	AN3-7A	• BOLT
	AN960-D10	• WASHER
	95-526010-16	• END FITTING
	AN315-3R	• NUT
	95-524020	• CHAIN & CABLE ASSEMBLY
	95-526010-2	• WELD ASSEMBLY
	95-526010-18	• RIVET
28	95-640006-601	STABILIZER ASSY,VERTICAL
	95-640005-27	• SKIN
	95-640005-30	• SKIN
	95-640005-15	• LH SKIN
	95-640005-16	• RH SKIN
	95-640005-33	• SUB SPAR
	AN366F832	• NUT
	95-640005-17	• FORMER
	95-640005-35	• RIB
	45-640005-33	• FORMER
	45-640005-35	• FORMER
	MS20600B5-2	• RIVNUT
	45-640005-37	• FORMER
	MS20600B5-2	• RIVNUT
	MS20600-AD-2	• RIVNUT
	MS20600-AD4-2	• RIVNUT
	95-640005-13	• TIP
	95-640005-41	• ANGLE
	45-620018-1	• RIB
	45-640005-65	• REINFORCEMENT
	95-640005-31	• DOUBLER
	95-640005-32	• DOUBLER
	45-620020	• COVER
	AN7510-1	• PLACARD
	AN366F832	• PLATE NUT
	AN373F1032	• NUT

FIGURE NO.	PART NO.	DESCRIPTION 1 2 3 4 5 6 7
28-CONT	95-640005-604	• SPAR ASSY,REAR
	95-640005-1	• • REAR SPAR
	95-640005-37	• • DOUBLER
	45-620011-2	• • BUSHING
	95-640005-603	• SPAR ASSY,FRONT
	95-640005-45	• • FRONT SPAR
	95-640005-43	• • DOUBLER
	45-620011-4	• • BUSHING
	95-526012-1	• • BRACKET
	95-526012-3	• • BLOCK
	MK1000-832	• • NUT PLATE
	45-620011-4	• BUSHING
	95-640006-1	• NOSE SKIN
	95-640006-11	• RIB
	95-640006-3	• RIB
	95-640006-5	• RIB
	95-640006-7	• RIB
	95-640005-605	• FORMER ASSY
	95-640005-19	• • FORMER
	95-640005-21	• • CHAIN
	95-640005-39	• • CHAIN
	AN366F1032	• • NUT PLATE
	95-640005-606	• HINGE ASSY
	45-640005-39	• • HALF HINGE
	B-55	• • BEARING
	95-640005-607	• CLAMP ASSY
	45-620021-1	• • CLAMP
	22A3-82	• • NUT PLATE
	95-640006-602	• HINGE ASSY
	45-640005-41	• • HALF HINGE
	95-640005-47	• • HALF HINGE
	95-640006-9	• • RIB
	B-55	• • BEARING
	AN365-832	• NUT
	MK1000-1032	• NUT PLATE
	95-340001-3	• BRACKET
	AN515-8R7	• SCREW
	AN366F832	• NUT PLATE
	AN365-832	• NUT
	95-524022-1	• SPROCKET
	95-526010-10	• TUBE
	52-022-094-0437	• PIN
	95-526011	• PLATE ASSY
	AN3-3A	• BOLT
	AN960-10L	• WASHER
	AN960-10	• WASHER
	AN320C3	• NUT
	AN381-2-8	• PIN
	AN173C6	• BOLT
	45-526015	• UNIVERSAL JOINT
	52-022-094-0562	• ROLL PIN
	AN173-6C	• BOLT
	AN960-10L	• WASHER
	AN960-10	• WASHER
	AN310-3	• NUT
	AN381-2-8	• PIN
	95-520011-601	• ACTUATOR ASSY
	45-524564	• • CHECK NUT
	95-524013	• • SCREW
	95-524014	• • NUT ASSY
	95-524012	• • BUSHING
	AN201KP6A	• • BEARING
	NAS50-87	• • RING

FIGURE NO.	PART NO.	DESCRIPTION 1 2 3 4 5 6 7
28-CONT	95-520011-602	• • HOUSING
	NAS42HT-3-28	• • SPACER
	95-526010-18	• • RIVET
	95-526010-16	• • ROD END
	45-524526	• • BUSHING
	AN3-7A	• BOLT
	AN960D10	• WASHER
	AN315-3R	• NUT
	95-524020	• CHAIN & CABLE ASSY
	95-526010-2	• WELD ASSY

FIGURE NO.	PART NO.	DESCRIPTION 1 2 3 4 5 6 7
29	95-610005-601	ELEVATOR ASSEMBLY,LH
	95-610005-602	ELEVATOR ASSEMBLY,RH
	45-610005-54	. LH HINGE
	45-610005-55	. RH HINGE
	AN526-632-12	. SCREW
	NAS43DD-1-25	. SPACER
	AN365-632	. NUT
	AN960-D6	. WASHER
	45-610005-104	. LH CHANNEL
	45-610005-105	. RH CHANNEL
	45-610005-106	. LH CHANNEL
	45-610005-107	. RH CHANNEL
	45-610005-4	. LH SKIN
	45-610005-5	. RH SKIN
	45-610005-6	. BRACKET
	45-610005-8	. GUSSET
	45-610005-12	. SPACER
	45-610005-28	. RIB
	45-610005-100	. FAIRING
	AN366-F832	. NUT PLATE
	45-610005-102	. FAIRING
	45-660011-2	. RIB
	AN366-F832	. NUT
	45-660011-4	. PLATE
	45-660011-6	. PLATE
	45-660012-1	. HORN SKIN
	AN507-832R7	. SCREW
	AN507-832R10	. SCREW
	AN936D8	. WASHER
	AN960-D8	. WASHER
	22A3-82	. NUT
	AN365-832	. NUT
	112105	. WASHER
	45-660013	. WEIGHT ASSEMBLY
	45-610007-1	. LH SPAR
	45-610007-2	. RH SPAR
	45-610008	. SPAR
	95-610005-3	. LH FITTING
	AN23-9A	. BOLT
	AN365-1032	. NUT
	AN960-10	. WASHER
	95-610005-4	. RH FITTING
	AN23-10A	. BOLT
	103637	. PLACARD
	AN365-1032	. NUT
	103637	. PLACARD
	AN960-10	. WASHER
	49384	. FASTENER
	45-610005-10	. DOUBLER
	45-610005-30	. DOUBLER
	AN366-F1032	. NUT
	45-610005-16	. RIB
	45-610005-18	. SPAR
	45-610005-92	. RIB
	45-610005-94	. RIB
	45-610005-96	. RIB
	45-610005-98	. RIB
	35-650122-4	. BRACKET
	AN502-10-10/M/	. SCREW
	AN960-10L	. WASHER
	35-650121-6	. BRACKET

FIGURE NO.	PART NO.	DESCRIPTION 1 2 3 4 5 6 7
29-CONT	AN502-10-10/M/	• SCREW
	AN960-10L	• WASHER
	45-610005-603	• LH TAB ASSEMBLY
	45-610005-604	• RH TAB ASSEMBLY
	45-610005-38	• • BRACKET
	45-610005-607	• • HORN ASSEMBLY
	45-610005-40	• • • HORN
	105740-X0190-0314-0115	• • • BUSHING
	45-610005-42	• • LH SKIN
	45-610005-43	• • RH SKIN
	45-610005-44	• • LH RIB
	45-610005-45	• • RH RIB
	45-610005-46	• • RH RIB
	45-610005-47	• • RH RIB
	45-610005-48	• • LH RIB
	45-610005-49	• • RH RIB
	45-610005-56	• • LH HINGE
	45-610005-57	• • RH HINGE
	AN366-F832	• • NUT PLATE
	45-660041	• HINGE PIN
	AN526-832R8	• SCREW
	AN960-8	• WASHER
29	95-610006-601	ELEVATOR ASSY,BALANCE LH
	95-610006-602	ELEVATOR ASSY,BALANCE RH
	45-610005-54	• LH HINGE
	45-610005-55	• RH HINGE
	AN526-632-12	• SCREW
	NAS43DD-1-25	• SPACER
	AN365-632	• NUT
	AN960D6	• WASHER
	45-610005-104	• LH CHANNEL
	45-610005-105	• RH CHANNEL
	45-610005-106	• LH CHANNEL
	45-610005-107	• RH CHANNEL
	45-610005-4	• LH SKIN
	45-610005-5	• RH SKIN
	45-610005-6	• BRACKET
	95-610006-7	• RIB
	95-610006-13	• SKIN
	45-610005-8	• GUSSET
	45-610005-12	• SPACER
	45-610005-28	• RIB
	45-610005-100	• FAIRING
	AN366F832	• NUT PLATE
	45-610005-102	• FAIRING
	45-660011-2	• RIB
	AN366F832	• NUT
	45-660011-4	• PLATE
	45-660011-6	• PLATE
	45-660012-1	• HORN SKIN
	AN507-832R7	• SCREW
	AN507-832R10	• SCREW
	AN936D8	• WASHER
	AN960D8	• WASHER
	22A3-82	• NUT
	AN365-832	• NUT
	112105	• WASHER
	95-610006-17	• WEIGHT ASSY
	95-610006-5	• LH SPAR

FIGURE NO.	PART NO.	DESCRIPTION 1 2 3 4 5 6 7
29-CONT	95-610006-6	• RH SPAR
	45-610008	• SPAR
	95-610005-3	• LH FITTING
	AN23-9A	• BOLT
	AN365-1032	• NUT
	AN960-10	• WASHER
	95-610005-4	• RH FITTING
	AN23-10A	• BOLT
	103637	• PLACARD
	AN365-1032	• NUT
	103637	• PLACARD
	AN960-10	• WASHER
	49384	• FASTENER
	45-610005-10	• DOUBLER
	45-610005-30	• DOUBLER
	AN366F1032	• NUT
	45-610005-16	• RIB
	95-610006-3	• SPAR
	45-610005-92	• RIB
	45-610005-94	• RIB
	45-610005-96	• RIB
	45-610005-98	• RIB
	35-650122-4	• BRACKET
	AN502-10-10/M/	• SCREW
	AN960-10L	• WASHER
	35-650121-6	• BRACKET
	AN502-10-10/M/	• SCREW
	AN960-10L	• WASHER
	95-610006-9	• RIB
	45-610005-603	• TAB ASSY,LH
	45-610005-604	• TAB ASSY,RH
	45-610005-38	• • BRACKET
	45-610005-607	• • HORN ASSY
	45-610005-40	• • • HORN
	105740-X0190-0314-0115	• • • BUSHING
	45-610005-42	• • LH SKIN
	45-610005-43	• • RH SKIN
	45-610005-44	• • LH RIB
	45-610005-45	• • RH RIB
	45-610005-46	• • RH RIB
	45-610005-47	• • RH RIB
	45-610005-48	• • LH RIB
	45-610005-49	• • RH RIB
	45-610005-56	• • LH HINGE
	45-610005-57	• • RH HINGE
	AN366F832	• • NUT PLATE
	95-610006-15	• HINGE PIN
	AN526-832R8	• SCREW
	95-610006-11	• SHIM
	AN960-8	• WASHER
	AN23-9A	• BOLT
30	95-630005-601	RUDDER ASSEMBLY & STATIC DISCHARGER ASSEMBLY
	45-630005-92	• SKIN
	95-630005-13	• SPAR
	45-630005-28	• RIB
	45-630005-30	• RIB
	45-630005-34	• DOUBLER
	AN366-F1032	• NUT
	45-630005-36	• DOUBLER
	45-630005-44	• RIB

FIG. NO.	PART NO.	DESCRIPTION 1 2 3 4 5 6 7
	95-630005-11	• DOUBLER
	45-630005-144	• DOUBLER
	45-630005-142	• PIN
	AN515-832R8	• SCREW
	AN960-8	• WASHER
	95-630005-602	• TAB ASSEMBLY
	45-630005-112	• SKIN
	45-630005-113	• SKIN
	45-630005-8	• STRIP
	45-630005-114	• SPAR
	45-630005-12	• RIB
	AN366-F832	• NUT
	AN515-832R8	• SCREW
	45-630005-158	• RIB
	AN366-F832	• NUT
	45-630005-32	• RIB
	45-630005-104	• ZEE SECTION
	45-630005-105	• ZEE SECTION
	45-630005-128	• GUSSET
	45-630005-132	• HINGE
	45-630005-116	• SUPPORT
	45-630005-180	• LH DOUBLER
	45-630005-180	• RH DOUBLER
	AN525-832-7	• SCREW
	AN960-8L	• WASHER
	AN365-832	• NUT
	45-630005-52	• RIB
	AN366-F832	• NUT
	AN507-832R7	• SCREW
	45-630005-148	• HORN
	AN525-832R8	• SCREW
	AN365-832	• NUT
	AN960-8	• WASHER
	112105	• WASHER
	45-630005-56	• PLATE
	45-630005-150	• WEIGHT ASSEMBLY
	AN507-832R7	• SCREW
	45-630005-138	• SPAR
	45-630005-108	• FAIRING
	45-630005-110	• FAIRING
	45-630005-160	• RIB
	45-630005-122	• WELD ASSEMBLY
	AN515-832R8	• SCREW
	AN960-8	• WASHER
	AN365-832	• NUT
	103637	• PLACARD
	49384	• FASTENER
	45-640010	• BRACKET
	AN502-10-10/M/	• SCREW
	100951-X-031-006-010	• WASHER
	45-640011	• BRACKET
	AN502-10-10/M/	• SCREW
	100951-X-031-006-010	• WASHER
31	95-521000-601	BELLCRANK ASSEMBLY,AILERON CONTROL CABLE LH
	95-521000-602	BELLCRANK ASSEMBLY,AILERON CONTROL CABLE RH
	35-521158-2	• BELLCRANK
	35-521158-3	• BELLCRANK
	105740-X0190-0252-0190	• BUSHING
	AR4	• BEARING
	AN316-5R	• NUT

FIGURE NO.	PART NO.	DESCRIPTION 1 2 3 4 5 6 7
	8-185-111-003	• BOLT
	AN320-4	• NUT
	AN960-416L	• WASHER
	AN380-2-2	• PIN
	AN960-10L	• WASHER
	AN320-3	• NUT
	AN380-2-2	• PIN
	35-521152-4	• TUBE
	HM-4	• ROD END
	AN316-4R	• CHECK NUT
	35-521190	• FITTING
	HML-4	• ROD END
	35-521186	• BOLT
	35-521187	• BOLT
	AN316-4L	• CHECK NUT
34	45-524040-602	HINGE ASSEMBLY
	45-524040-2	• CASTING
	AN200KP4	• BEARING
	NO NUMBER	• INSERT
	NAS428H4-10/M/	• BOLT
	AN316-4R/M/	• NUT
36	95-810000-612	GEAR ASSEMBLY,MAIN LANDING GEAR /LESS TIRE,TUBE,WHEEL & BRAKE/
	95-810000-613	GEAR ASSEMBLY,MAIN LANDING GEAR /LESS TIRE,TUBE,WHEEL & BRAKE/
	95-810011-1	• LH LOWER SHOCK
	95-810011-2	• RH LOWER SHOCK
	95-810010-1	• LH UPPER SHOCK
	95-810010-2	• RH UPPER SHOCK
	95-810012	• CONTROL ASSEMBLY
	35-815088-10	• BODY ASSEMBLY
	45-815224	• PLUG
	AN6230-2	• GASKET
	45-815225	• LOCK
	NAS50-200	• RING
	45-815232	• ADAPTER
	AN6227-31	• O RING
	AN6227-6	• O RING
	45-815201-2	• FELT
	111200-6	• SNAP RING
	AN6231A20	• SCRAPER
	45-615237	• PIN
	AN392-27	• PIN
	AN6227-24	• O RING
	MS28782-24	• BACK UP RING
	AN392-23	• PIN
	AN380-2-1	• COTTER
	45-815011-6	• UPPER KNEE ASSEMBLY
	45-815015-6	• LOWER KNEE ASSEMBLY
	105739-S0312-0436-0431	• BUSHING
	AN5-13	• BOLT
	AN310-5	• NUT
	AN960-516	• WASHER
	AN380-2-3	• COTTER
	35-815081	• WASHER
	AN365-524	• NUT
	MS15002-1	• FITTING
	16	• CORK

FIGURE NO.	PART NO.	DESCRIPTION 1 2 3 4 5 6 7
36-CONT	AN4-10A	• BOLT
	AN960-416	• WASHER
	AN365-428	• NUT
	35-815004	• CLAMP ASSEMBLY
	35-815004-1	• CLAMP ASSEMBLY
	AN832-4D	• UNION
	AN960-716	• WASHER
	AN924-4	• NUT
	MS28741-4-15-3/8	• HOSE ASSEMBLY
	35-815043	• TUBE ASSEMBLY
	35-815044	• TUBE ASSEMBLY
	35-815038	• CLAMP ASSEMBLY
	AN742-15	• CLAMP
	AN742-6C	• CLAMP
	AN3-4A	• BOLT
	AN960-10	• WASHER
	AN365-1032	• NUT
	AN4-7A	• BOLT
	AN4-7A	• BOLT
	AN365-428	• NUT
	45-915001-5	• SHIM
	AN960-416	• WASHER
	AN815-4D	• UNION
	95-361014	• SWITCH & WIRING ASSEMBLY
	35-361145	• LINK ASSEMBLY
	AN42-4	• EYE BOLT
	AN161-16RS	• FORK
	AN3-5A	• BOLT
	MS21919DG8	• CLAMP
	AN960-D10	• WASHER
	AN380-2-1	• PIN
	AN393-13	• PIN
	AN310-3	• NUT
	AN380-2-2	• PIN
	AN960-10L	• WASHER
41	95-824005	GEAR,NOSE LANDING /LESS TIRE,TUBE & WHEEL/
	45-825034	• BOLT
	35-820133	• CLIP
	AN960-416	• WASHER
	AN4-21A	• BOLT
	AN365-428	• NUT
	35-820028	• BUSHING
	35-820107	• KNEE ASSEMBLY
	35-820108	• PIN
	95-824011	• CONTROL ASSEMBLY
	95-824016	• BARREL ASSEMBLY
	95-824005-3	• BRACE ASSEMBLY
	45-825033	• COLLAR
	35-820122	• PLUG
	35-820125	• BODY
	35-820132	• PIN
	35-820134	• SHIM
	35-825145	• DAMPER ASSEMBLY
	35-820130-2	• PAD
	NAS505-4J	• BEARING
	45-825032	• ADAPTER
	111200-6	• SNAP RING
	105739-S0189-0249-0190	• BUSHING
	105739-S0375-0499-1483	• BUSHING
	35-820130-4	• PAD
	AN3-6A	• BOLT

FIGURE NO.	PART NO.	DESCRIPTION 1 2 3 4 5 6 7
41-CONT	95-824014-602	. FORK & PISTON ASSEMBLY
	95-824015	. . PISTON
	35-825128	. . AXLE ASSEMBLY
	35-820109	. . PLUG
	AN6227-24	. . PACKING
	35-820104-18	. . FORK ASSEMBLY
	AN4-12	. BOLT
	AN6-31A	. BOLT
	AN960-10	. WASHER
	AN960-10L	. WASHER
	AN960-416	. WASHER
	AN310-4	. NUT
	NAS222-17	. SCREW
	AN365-1032	. NUT
	AN365-428	. NUT
	AN365-624	. NUT
	AN380-2-1	. COTTER PIN
	AN380-2-2	. COTTER PIN
	AN392-23	. PIN
	AN392-21	. PIN
	AN813-1B	. CAP
	AN6227-5	. PACKING
	AN6227-6	. PACKING
	AN6230-1	. GASKET
	AN6230-2	. GASKET
	NAS50-187	. SNAP RING
	S1452-048	. BARREL NUT
	302D	. CORE
	AN960-416	. WASHER
	100951-S063-008-024	. WASHER
	AN6231A19	. SCRAPER
	100951-S063-010-024	. WASHER
	100951-X031-012-028	. WASHER
	100951-X031-012-022	. WASHER
	AN6227-23	. O RING
	MS28782-23	. BACK UP RING
41A	35-825196-691	GEAR ASSEMBLY,NOSE LESS TUBELESS TIRE & WHEEL
	694-180702	. NUT
	35-825175-6	. GUARD ASSEMBLY
	AN4H4A	. BOLT
	AN960-416	. WASHER
	AN4-5A	. BOLT
	AN960-416	. WASHER
	AN365-428	. NUT
	AN4H3A	. BOLT
	AN960-416	. WASHER
	95-820000-3	. WASHER
	95-820000-1	. WASHER
	AN7502-20	. NUT
	AN380-4-7	. PIN
	35-820107	. KNEE ASSEMBLY
	45-824019	. PIN
	AN380-2-1	. PIN
	AN392-23	. PIN
	AN392-21	. PIN
	35-825193-1	. KNEE
	1729	. FITTING
	MS15002-1	. FITTING
	35-820132	. PIN
	AN4-12	. BOLT
	100951-S063-008-024	. WASHER
	100951-S063-010-024	. WASHER
	35-820028	. BUSHING

FIGURE NO.	PART NO.	DESCRIPTION 1 2 3 4 5 6 7
41A-CONT	AN310-4	• NUT
	AN380-2-2	• PIN
	35-825145	• DAMPER ASSEMBLY
	105739-S0375-0499-1483	• BUSHING
	AN6-31A	• BOLT
	100951-X031-4M	• WASHER
	AN365-624	• NUT
	100951-X031-4N	• WASHER
	45-825033	• COLLAR
	NAS505-4J	• BEARING
	NAS222-17	• BOLT
	AN960-416	• WASHER
	S-1452-048	• BARREL NUT
	45-825034	• BOLT
	35-820134	• SHIM
	35-820125	• VALVE BODY
	AN6227-6	• PACKING
	302-D	• CORE
	AN813-1B	• CAP
	95-824005-3	• BRACE ASSEMBLY
	35-380020-3	• RING
	AN3-6A	• BOLT
	105739-S0189-0249-0190	• BUSHING
	AN960-10	• WASHER
	AN960-10L	• WASHER
	AN365-1032	• NUT
	35-820130-2	• PAD
	45-825032	• ADAPTER
	111200-6	• SNAP RING
	AN6230-2	• O RING
	AN6230-1	• O RING
	NAS50-187	• RING
	AN6231-A19	• SCRAPER
	35-825195-15	• ORIFICE TUBE ASSEMBLY
	35-825195-21	• BARREL ASSEMBLY
	35-825195-601	• PISTON & FORK ASSEMBLY
	35-825195-11	• • FORK ASSEMBLY
	35-825195-7	• • TUBE
	35-825195-9	• • PLUG
	35-825128	• • AXLE ASSEMBLY
	AN6227-23	• • O RING
	35-820133	• CLIP
	AN4-21A	• BOLT
	AN960-416	• WASHER
	AN365-428	• NUT

FIGURE NO.	PART NO.	DESCRIPTION 1 2 3 4 5 6 7
51	95-910011-601	COWLING ASSY,ENGINE LH
	95-910011-602	COWLING ASSY,ENGINE RH
	95-910011-483	. LH DOOR ASSY
	95-910011-121	. FORMER
	95-910011-469	. LH DOOR ASSY
	95-910011-477	. HINGE
	35-910160-8	. RH HINGE
	95-910011-339	. LH HINGE
	105774-C-090-00212	. RH PIN
	105774-C-ZE-00708	. PIN
	95-910011-340	. RH ANGLE

FIGURE NO.	PART NO.	DESCRIPTION 1 2 3 4 5 6 7
51-CONT	95-910011-128	• HINGE
	95-910011-465	• LH OUTBD LH SKIN
	95-910011-372	• RH LOWER SKIN
	95-910011-467	• LH LOWER INBD LH SKIN
	95-910011-468	• RH LOWER INBD RH SKIN
	95-910011-117	• CHANNEL
	95-910011-118	• CHANNEL
	95-910011-471	• LH DOUBLER
	95-910011-127	• ANGLE
	95-910011-481	• LH DOUBLER
	95-910011-163	• DOUBLER
	95-910011-164	• DOUBLER
	95-910011-165	• DOUBLER
	95-910011-166	• DOUBLER
	95-910011-29	• FORMER
	95-910001-107	• ELBOW
	95-910011-130	• FORMER
	95-910011-215	• DOUBLER
	95-910011-216	• DOUBLER
	414-184040-21	• T BOLT
	AN509-1032	• SCREW
	AN365-1032	• NUT
	AN960-10L	• WASHER
	AN366F1032	• NUT PLATE
	414-184040-9	• PLATE
	295718	• COVER
	98292-1-110	• RECEPTACLE
	95-910011-619	• NOSE ASSY,ENGINE COWL
	95-910011-607	• • FAIRING ASSY,ENGINE COWL UPPER NOSE
	06 X 6 X 30	• • • PLASTIC MOLDING
	06 X 24 X 48	• • • PLASTIC MOLDING
	95-910011-195	• • BAND
	95-910011-151	• • RING
	95-910011-203	• • SPLICE
	95-910011-204	• • SPLICE
	95-910011-153	• • SPLICE
	95-910011-154	• • SPLICE
	95-910011-149	• • RING
	95-910011-197	• • BAND
	95-910011-157	• • NOSE
	AN525-8	• • SCREW
	AN365-832	• • NUT
	95-910015-135	• • BAFFLE ASSY
	1/16 X 1/4	• NYLON ROD
	AN515C8R	• SCREW
	AN365-832	• NUT
	95-910011-617	• DOOR ASSY,ENGINE COWLING UPPER
	95-910011-618	• DOOR ASSY,ENGINE COWLING UPPER
	414-184040-1	• • LEVER ASSY
	414-184040-15	• • STRAP
	98292-2-170	• • STUD
	95-910011-143	• • SKIN
	95-910011-144	• • SKIN
	95-910011-115	• • RAIL
	95-910011-116	• • RAIL
	95-910011-113	• • FORMER
	95-910011-114	• • FORMER
	95-910011-111	• • FORMER
	95-910011-112	• • FORMER
	95-910011-131	• • ZEE
	95-910011-132	• • ZEE
	95-910011-177	• • BRACKET
	95-910011-178	• • BRACKET

FIGURE NO.	PART NO.	DESCRIPTION 1 2 3 4 5 6 7
51-CONT	95-910011-187	. . BRACKET
	95-910011-188	. . BRACKET
	95-910011-327	. . FORMER
	95-910011-189	. . BRACKET
	95-910011-190	. . BRACKET
	95-910011-183	. . BRACKET
	95-910011-184	. . BRACKET
	AN365-1032	. . NUT
	95-910011-391	. . HINGE
	AN520-10R	. . SCREW
	95-910011-305	. . FORMER
	99836	. . PIN
	108424-2	. . CLIP
	95-910011-385	. . BRACKET
	95-910011-401	. . DOOR ASSY
	95-910011-403	. . DOUBLER
	35-910160-8	. . HALF HINGE
	105774-C-090-00212	. . PIN
	95-910011-405	. . ANGLE
	95-910011-406	. . ANGLE
	AN3-5A	. . BOLT
	95-910011-399	. . ROD
	95-910011-400	. . ROD
	95-910011-169	. LH STIFFENER
	95-910011-170	. RH STIFFENER
	95-910011-171	. LH STIFFENER
	AN960-516L	. WASHER
	AN4-11A	. BOLT
	AN365-428	. NUT
	100696-X-ZH-020	. BUSHING
	105090-CR-150-5-E	. SPACER
	F4-30	. FASTENER
	5	. SNAP RING
	S4-250	. SPRING
	95-919100-23	. AFTER BODY
	95-910011-172	. RH STIFFENER
	95-910016-79	. LH BRAZE ASSY
	95-910016-80	. RH BRAZE ASSY
	95-910016-77	. LH BRAZE ASSY
	95-910016-78	. RH BRAZE ASSY
	AN380-2-2	. PIN
	185678	. CLIP
	AN960D4	. WASHER
	AN515-8	. SCREW
	AN970-3	. WASHER
	AN365-832	. NUT
	95-910011-309	. CLIP
	95-910011-310	. CLIP
	95-910011-317	. SHIELD
	95-910011-319	. SHIELD
	111177-00216	. FRONT SEAL
	111177-02600	. CENTER SEAL
	111177-00316	. REAR SEAL
	95-919100-601	. DUCT ASSY,INDUCTION SYSTEM AIR
	95-919100-605	. . BOX ASSY,AIR INDUCTION SYSTEM FILTER
	95-919100-9	. . . FRAME
	95-919100-11	. . . PLATE
	95-919100-13	. . . CLIP
	95-919100-15	. . DOOR
	AN507-832R	. . SCREW
	AN365-832	. . NUT

FIGURE NO.	PART NO.	DESCRIPTION 1 2 3 4 5 6 7
51-CONT	99833-P130	• • RECEPTACLE
	95-919100-5	• • DUCT HEAD
	95-919100-7	• • THROAT
	AN507-832-7	• • SCREW
	AN365-832	• • NUT
	AD475	• • DUCT
	95-910011-365	• • WASHER
	95-910015-213	• CLIP
	95-910015-197	• STRIP
	95-910015-203	• DUCT ASSY
	AN525-8R8	• SCREW
	AN365-832	• NUT
	95-910015-113	• SEAL
	AN960D8	• WASHER
	95-910015-135	• BAFFLE ASSY
	8523517	• OIL COOLER
	AN507-832-7	• SCREW
	AN365-832	• NUT
	AD475	• DUCT
	95-910011-365	• WASHER
	MK1000-08	• NUT PLATE
	AN3-6	• BOLT
	AN365-1032	• NUT
	121128-1	• FILTER ASSY
	98292-1-110	• STUD
	99836	• PIN
	AN822-8	• ELBOW
	95-910011-611	• TOP ASSY,ENGINE COWL
	95-910011-133	• • CHANNEL
	95-910011-134	• • CHANNEL
	95-910011-135	• • RIB
	95-910011-137	• • RIB
	95-910011-139	• • RIB
	95-910011-175	• • RIB
	95-910011-181	• • RIB
	95-910011-201	• • RETAINER
	95-910011-321	• • RETAINER
	95-910011-323	• • RETAINER
	95-910011-335	• • DOUBLER
	95-910011-336	• • DOUBLER
	95-910015-219	• • STRIP
	95-910015-221	• • CLIP
	95-910015-222	• • CLIP
	95-910015-223	• • SEAL
	95-910011-367	• • SKID
	95-910011-393	• • STOP
	95-910011-345	• SEAL
	95-910011-347	• RETAINER
	AN515-440	• SCREW
	AN365-440	• NUT
	95-910011-352	• BUMPER
	95-910001-141	• BRACKET
	601000-8D-24	• HOSE ASSY
	601000-8D-18-5/8	• HOSE ASSY
	AN837-8D	• ELBOW
	AN924-8D	• NUT
	MS21919-DG-10	• CLAMP
	AN507-832-16	• SCREW
	AN365-832	• NUT
	AN960D8	• WASHER
	NASDD3-22	• SPACER
	NASDD3-16	• SPACER

FIGURE NO.	PART NO.	DESCRIPTION 1 2 3 4 5 6 7
51-CONT	95-910011-389	• BOLT ASSY
	AN3	• BOLT
	AN960-10	• WASHER
	50-910032	• NUT
52	95-610016-601	ACTUATOR ASSEMBLY,COWL FLAP LH
	95-610016-602	ACTUATOR ASSEMBLY,COWL FLAP RH
	95-610016-61	• HINGE
	95-610016-43	• STOP
	95-610016-47	• CABLE
	AN664C3	• TERMINAL
	95-910016-45	• TUBING
	95-369011	• ACTUATOR
	AN500A8-10	• SCREW
	95-910016-53	• EXTENSION
	111504-100-032-0024-4	• SPRING

FIGURE NO.	PART NO.	DESCRIPTION 1 2 3 4 5 6 7
53	95-919100-601	SCOOP ASSEMBLY,AIR INDUCTION SYSTEM
	95-919100-605	• BOX,AIR INDUCTION SYSTEM FILTER
	95-919100-9	• • FRAME
	95-919100-11	• • PLATE
	95-919100-13	• • CLIP
	95-919100-15	• DOOR
	AN507-832R	• SCREW
	AN365-832	• NUT
	99833-P130	• RECEPTACLE
	95-919100-5	• DUCT HEAD
	95-919100-7	• THROAT
56	95-960011-601	BRACKET ASSEMBLY,PROPELLER ACCUMULATOR LH
	95-960011-602	BRACKET ASSEMBLY,PROPELLER ACCUMULATOR RH
	95-960011-5	• BRACKET
	95-960011-6	• BRACKET
	AN366F1032	• NUT PLATE
57	95-920001-601	VALVE ASSEMBLY,FUEL SELECTOR LH
	95-920001-602	VALVE ASSEMBLY,FUEL SELECTOR RH
	95-924014-1	• BASE
	50-920030-4	• GASKET
	50-389002	• VALVE
	AN500-A10-10	• SCREW
	AN935-10	• WASHER
	AN822-6D	• ELBOW
57	95-920001-604	DRIVER ASSEMBLY,FUEL SELECTOR VALVE
	95-920001-79	• TUBE
	95-920001-85	• SHAFT
	18•9714	• DRIVER
	MS20270-B8	• UNIVERSAL JOINT
	52-028-125-0500	• PIN
60	95-524034-601	ARM ASSEMBLY,DUAL CONTROL
	1191-3CN	• INSERT
	35-524261-4	• ARM
	AN201-K-10A	• BEARING
	B-78X	• BEARING
	35-524048	• SPROCKET
	35-524576	• KEY
	35-524139	• CHAIN ASSEMBLY
	35-524141	• CONNECTOR
	35-524262-1	• SPROCKET
	AN320-7	• NUT
	AN380-3-4	• PIN
	100943-035-005-108-8	• SPRING
	35-524587	• COVER

FIGURE NO.	PART NO.	DESCRIPTION 1 2 3 4 5 6 7
	35-524591 SA8	• WHEEL
	35-524602	• FRAME
	35-524603	• LENS
	AN960-6	• WASHER
	AN365-632	• NUT
	51020	• PLUG
	35-524636-3	• BACKING
	35-524636-5	• BACKING
	35-524636-9	• PLATE ASSEMBLY
	35-524241	• BUSHING
	AN201-K-10A	• BEARING
	35-524048	• SPROCKET
	35-524576	• KEY
	35-524139	• CHAIN ASSEMBLY
	35-524141	• CONNECTOR
	35-524591 SA6	• WHEEL
	35-524602	• FRAME
	35-524603	• LENS
	AN960-6	• WASHER
	AN365-632	• NUT
	35-524587-2	• COVER ASSEMBLY
	35-524636-3	• BACKING
	35-524636-5	• BACKING
	35-524636-9	• PLATE ASSEMBLY
60	95-324006-641	COLUMN ASSEMBLY,ARM & CONTROL
	35-524087-2	• ARM
	35-524241	• BUSHING
	B-78	• BEARING
	AN201K10A	• BEARING
	35-524048	• SPROCKET
	35-524051-1	• SPROCKET
	35-524095	• PIN
	35-524096	• KNOB
	35-524139	• CHAIN ASSEMBLY
	35-524576	• KEY
	35-524141	• CONNECTOR
	35-524587-2	• COVER ASSEMBLY
	AN3207	• NUT
	AN380-3-4	• PIN
	100943-035-005-108-8	• SPRING
	35-524602	• FRAME ASSEMBLY
	35-524603	• LENS
	35-524636-9	• PLATE
	35-524636-5	• BACKING
	35-524591 SA6	• WHEEL ASSEMBLY
	95-324006-618	• ARM ASSEMBLY
	95-324006-43	• BRAZE ASSEMBLY
	95-524006-45	• TUBE ASSEMBLY
	35-524047	• TORQUE KNEE
	35-524038	• WASHER
	35-524240	• LINK
	35-524269	• BOLT
	35-524274-4	• SPROCKET ASSEMBLY
	35-524636-3	• BACKING SHEET
	35-524349	• NUT
	102933-D5-0375-02452	• SPACER
	50-524059-4	• BUSHING
	AN200K3L	• BEARING
	AN503-8-6	• SCREW
	AN960-416L	• WASHER
	NAS51-87	• RETAINER

FIGURE NO.	PART NO.	DESCRIPTION 1 2 3 4 5 6 7
	NAS53-32	• BOLT
	AN310-3	• NUT
	35-524238-4	• RETAINER
	35-524238-12	• RETAINER
	AN501-10-5	• SCREW
	AN935-10L	• WASHER
	AN960-10	• WASHER
	AN380-2-2	• PIN
	NAS54-33	• BOLT
	AN310-4	• NUT
	AN960-416	• WASHER
	AN380-2-2	• PIN
	AN24-14	• BOLT
	AN320-4	• NUT
	AN130-3	• NUT
	AN3-26	• BOLT
	AN380-2-3	• PIN
	35-524197-2	• ROLLER
	35-524264	• BUSHING
	35-524125-2	• HANGER
	AN200K3L	• BEARING
	B148	• BEARING
	GB-59	• NEEDLE BEARING
	AN312A	• BOLT
	AN365-1032	• NUT
	AN960-10L	• WASHER
	51020	• PLUG BUTTON
	AN364-632	• NUT
	AN960-6L	• WASHER
	35-524231	• FITTING
	35-524230-2	• BUSHING
	AN200-K3L	• BEARING
63	95-364011-601	SWITCH ASSEMBLY,LANDING GEAR LIMIT
	35-364126-2	• BRACKET
	35-364126-4	• BRACKET
	35-364247	• ACTUATOR
	35-364137	• PLATE
	35-364238	• INSULATOR
	AN515-632	• SCREW
	95-364011-1	• TAB
	AN3210-1	• SWITCH
63	95-361016-601	SWITCH ASSEMBLY,FLAP LIMIT
	45-361116-1	• BRACKET
	3210-1	• SWITCH
	AN3169-1	• ACTUATOR

PARTS CATALOG ADDENDUM

A/C MODEL: 95 **DATE:** April 30, 1964 **CATALOG P/N:** 95-590018B

92-437

Code	Page	Figure	Index	Change Part Number From	Change Part Number To	Description	End Serial	Start Serial
PN	2-335	61B	2	95-324011-51	95-380020	Gage, Oil Pressure/Supersedes 95-324011-51/	TD-533	TD-453
PN	2-335	61B	3	95-324011-43	95-380014-1	Gage, Oil Temperature/Supersedes 95-324011-43/	TD-533	TD-453
PN	2-335	61B	8	95-324011-33	96-380016-1	Indicator, Cylinder Head Temperature/Supersedes 95-324011-33/	TD-533	TD-453
PN	2-335	61B	10	95-324011-57	50-384024-17	Indicator, Manifold Pressure /Supersedes 95-324011-57/	TD-533	TD-453
PN	2-335	61B	11	95-324011-29	35-324365-9	Tachometer /Supersedes 95-324011-29/	TD-533	TD-453
PN	2-336	61B	19	95-324011-53	35-380043-1	Horizon Gyro/Supersedes 95-324011-53 & 35-380039/	TD-533	TD-453
DR	2-129	29			95-610005-601	Elevator Assy, LH Corrugated (With Elevator Tab Assy)	TD-302	TD-1
DR	2-129	29			95-610005-602	Elevator Assy, RH Corrugated (With Elevator Tab Assy)	TD-302	TD-1
DR&SN	2-129	29			95-610006-601	Elevator Assy, LH Corrugated (With Elevator Tab Assy)	TD-559	TD-303
DR&SN	2-129	29			95-610006-602	Elevator Assy, RH Corrugated (With Elevator Tab Assy)	TD-559	TD-303
A	2-129	29			96-610005-651	Elevator Assy, LH Smooth Skin (Less Elevator Tab Assy) (May be used for spares TD-302 & After)		TD-560
A	2-129	29			96-610005-652	Elevator Assy, RH Smooth Skin (Less Elevator Tab Assy) (May be used for spares TD-302 & After)		TD-560

A - Addition **D - Deletion** **DR - Description Revision** **PN - Part Number Change** **SN - Serial Number Change**

PARTS CATALOG ADDENDUM

A/C MODEL: 95 **DATE:** June 23, 1964 **CATALOG P/N:** 95-590018B

92-437

Code	Page	Figure	Index	Change Part Number From	Change Part Number To	Description	End Serial	Start Serial
PN	2-327	60	5	35-380060-9	35-380060-21	Wheel Assy, Control Column Throwover (Less Emblem) (Supersedes 35-380060-9)		All
PN	2-327	60		35-380060-11	35-380060-23	Wheel Assy, Control Column Dual RH (Less Emblem) (Supersedes 35-380060-11)		All
PN	2-280	56	18	SP2890-1	95-380026	Accumulator, Propeller Governor (Supersedes SP2890-1)		All
PN	2-77	14C	38	96-534026	96-534046	Placard Weight Limitation (Supersedes 96-534026 & 96-534028)		TD-534
PN	2-231	49	110	95-910017	95-910017-1	Clamp (Supersedes 95-910017)		All
PN	2-231	49	112	95-910018	95-910018-3	Shroud, (Supersedes 95-910018 & 95-910018-1)		All
PN	2-243	49C	82	95-910018	95-910018-3	Shroud, (Supersedes 95-910018)		All
PN	2-243	49C	83	95-910017	95-910017-1	Clamp, Shroud (Supersedes 95-910017)		All
PN	2-266	52		95-910016-81	95-910016-116	Hinge, Cowl Flap Outbd RH		All
PN	2-266	52		95-910016-82	95-910016-117	Hinge, Cowl Flap Outbd LH		All
PN	2-266	52		95-910057	95-910016-118	Hinge, Cowl Flap Inbd RH		All
PN	2-266	52		95-910057-1	95-910016-119	Hinge, Cowl Flap Inbd LH		All
PN	2-266	52	3	95-910016-63	95-910016-120	Bracket, Hinge		All
PN	2-266	52		95-910016-93	95-910016-122	Hinge, Cowl Flap Stop RH		All
PN	2-268	52A		95-910016-81	95-910016-116	Hinge, Cowl Flap Outbd RH		All
PN	2-268	52A		95-910016-82	95-910016-117	Hinge, Cowl Flap Outbd LH		All
PN	2-268	52A		95-910057-1	95-910016-118	Hinge, Cowl Flap Inbd RH		All
PN	2-268	52A		95-910057	95-910016-119	Hinge, Cowl Flap Inbd LH		All
PN	2-216	48A	3	M-4861H-1A	96-380023	Blower Assy, Air 1 req		All
PN	2-210	48	3	M-4861H-1A	96-380023	Blower Assy, Air 1 req		All
PN	2-210	48B		M-4861H-1A	96-380023	Blower Assy, Air 1 req		All

A - Addition **D - Deletion** **DR - Description Revision** **PN - Part Number Change** **SN - Serial Number Change**

PARTS CATALOG ADDENDUM

A/C MODEL: 95 **DATE:** September 18, 1964 **CATALOG P/N:** 95-590018B

92-437

Code	Page	Figure	Index	Change Part Number From	Change Part Number To	Description	End Serial	Start Serial
A	2-297	57D			35-921242-7	Tank Assy, LH (40-Gal.) (Optional)		TD-526
A	2-297	57D			35-921242-8	Tank Assy, RH (40-Gal.) (Optional)		TD-526
SN	2-187	41A			35-825196-691	Gear Assy, Nose Landing (Spare Assy, See Section 4 for Components) (Less tire, tube & wheel) (Welded Assy.)	TD-537	TD-1
A	2-187	41A			35-825196-695	Gear Assy, Nose Landing (Less tire, tube & wheel) (Forged Assy.)		TD-538
PN	2-272	53	34	95-919112-95	95-919117-676	Weld Assy, Bushing (4 Req.) (Supersedes 95-919112-95) (Consists of 95-919117-53 & 5L10-F)		Noted
A	2-272	53			95-919117-53	Weld Assy, Bushing (4 Req.)		Noted
A	2-272	53			5L10-F	Nyliner, Flanged (4 Req.)		Noted
				NOTE: The three parts listed above supersede 95-919112-95 and should be used as replacement parts TD-1 thru TD-452, & TD-534 and After.				
PN	2-257	49K	1	HC-92ZK-2B/ 8447-12A	HC-92WK-2B/ W8447-12A	Propeller Assy, with Needle Bearings		All
A	2-257	49K	23		W8447-12A	Blade, Prop. (Use only with HC-92WK-2B/W8447-12A Prop.)		
SN	2-192	42		95-824020		Rod Assy, Nose Gear Retract Fwd. Link	TD-551	TD-1
A	2-192	42			35-825087-16	Rod Assy, Nose Gear Retract Fwd. Link		TD-552
SN	2-192	42	18	95-824020-3		Braze Assy, Nose Gear Retract Fwd. Link Rod	TD-551	TD-1
A	2-192	42	18		35-825087-14	Braze Assy, Nose Gear Retract Fwd. Link Rod		TD-552

A - Addition **D - Deletion** **DR - Description Revision** **PN - Part Number Change** **SN - Serial Number Change**

PARTS CATALOG ADDENDUM

A/C MODEL: 95 **DATE:** August 24, 1964 **CATALOG P/N:** 95-590018B

92-437

Code	Page	Figure	Index	Change Part Number From	Change Part Number To	Description	End Serial	Start Serial
PN	2-240	49C	17	HC-92ZK-2B/ 8447-12A	HC-92WK-2B/ W8447-12A	Propeller Assy		All
PN	2-230	49	89A	HC-92ZK-2B/ 8447-12A	HC-92WK-2B/ W8447-12A	Propeller Assy		All
SN	2-22	8	14	95-410029-602		Door Assy, Nose Access	TD-551	TD-1
A	2-22	8			95-410029-612	Door Assy, Nose Access (1 req)		TD-552
PN	2-297	57D	2	95-920011-5	95-920011-3	Tank Assy, 31 Gal. Aux. LH		TD-534
PN	2-297	57D		95-920011-6	95-920011-4	Tank Assy, 31 Gal. Aux. RH		TD-534
A	2-297	57D			95-920011-7	Tank Assy, 31 Gal. Aux. LH (Alternate for 95-920011-3)		TD-534
A	2-297	57D			95-920011-8	Tank Assy, 31 Gal. Aux. RH (Alternate for 95-920011-4)		TD-534
PN	2-297	57D	1	50-920008-9	95-380027-1	Tank Assy, 25 Gal. Main LH		TD-534
PN	2-297	57D		50-920008-10	95-380027-2	Tank Assy, 25 Gal. Main RH		TD-534
PN	2-240	49C		72659-Y0	74879	Alternator, 24V-50 Amp (Optional)		TD-534
A	2-240	49C			9000591	Voltage Regulator 50 Amp (Use with 74879 Alternator)		TD-534
PN	2-241	49C		72000	72871	Belt, Use with 74879 Alternator		TD-534
A	2-15	5			95-440006-215	Bulkhead Assy, Sta. 151.00 (Used with Large Baggage Door)		TD-534
A	2-327	60			35-524585-19	Arm Assy, Throw Over Arm with Rams Horn Control Wheel		TD-2
A	2-327	60			35-524656-5	Arm Assy, Dual Control with Rams Horn Wheel	TD-557	TD-2
A	2-327	60			95-524045-3	Arm Assy, Dual Control with Rams Horn Wheel		TD-558

The three control arms listed above supersedes all control arms listed in Catalog Fig. 60.

A - Addition **D - Deletion** **DR - Description Revision** **PN - Part Number Change** **SN - Serial Number Change**

PARTS CATALOG ADDENDUM

A/C MODEL: 95 **DATE:** October 27, 1964 **CATALOG P/N:** 95-590018B

92-437

Code	Page	Figure	Index	Change Part Number From	Change Part Number To	Description	End Serial	Start Serial
SN&DR	2-129	29			95-610006-651	Elevator Assy, LH Corrugated (With Elevator Tab Assy)	TD-499	TD-303
SN&DR	2-129	29			95-610006-652	Elevator Assy, RH Corrugated (With Elevator Tab Assy)	TD-499	TD-303
SN&DR	2-129	29			95-610006-601	Elevator Assy, LH Corrugated (With Elevator Tab Assy)	TD-559	TD-500
SN&DR	2-129	29			95-610006-602	Elevator Assy, RH Corrugated (With Elevator Tab Assy)	TD-559	TD-500
A	2-129	29			96-610005-601	Elevator Assy, LH Smooth (With Elevator Tab Assy)		TD-560
A	2-129	29			96-610005-602	Elevator Assy, RH Smooth (With Elevator Tab Assy)		TD-560
A	2-129	29			96-610005-651	Elevator Assy, LH Smooth (Less Elevator Tab Assy)		TD-560
A	2-129	29			96-610005-652	Elevator Assy, RH Smooth (Less Elevator Tab Assy)		TD-560
PN	2-149	35	14	35-524011	95-810019-43	Pedal, Copilots LH Brake Pedal		All
PN	2-271	53		NAS1297-303	NAS1297-3D3	Bolt (TD-1 thru TD-452 And)		TD-534
SN	2-276	54	4		95-940011	Control Assy, Carburetor Heat LH	TD-577	TD-1
SN	2-276	54			95-940011-7	Control Assy, Carburetor Heat RH	TD-577	TD-1
A	2-276	54			95-380005-5	Control Assy, Carburetor Heat LH		TD-578
A	2-276	54			95-380005-7	Control Assy, Carburetor Heat RH		TD-578

NOTE: The 2 controls listed above may be used as spares prior to TD-578 by using Rod Ends and attaching hardware.

A - Addition **D - Deletion** **DR - Description Revision** **PN - Part Number Change** **SN - Serial Number Change**

PARTS CATALOG ADDENDUM

A/C MODEL: 95 **DATE:** December 28, 1964 **CATALOG P/N:** 95-590018B

92-437

Code	Page	Figure	Index	Change Part Number From	Change Part Number To	Description	End Serial	Start Serial
SN	2-78	14C	97		35-534391-1	TUBE, Coat Hanger (1 REQ)	TD-578	TD-534
A	2-78	14C	97		1440-14	CABLE ASSY, Coat Hanger (1 REQ)		ALL
A	2-78	14C			95-534042-3	CAP, Cable End (2 REQ)		ALL
PN/DR	2-97	19	23	95-110011	95-110011-3	RIB ASSY, Sta 191 LH (1 REQ)	TD-525	TD-1
A	2-97	19			95-110011-4	RIB ASSY, Sta 191 RH (1 REQ)	TD-525	TD-1
PN	2-117	24		45-521212-10	45-521212-16	SHAFT & CASING ASSY, Flap Actuator		ALL
PN	2-117	24	2	SK4501A-63 5/16	3XSK8509-63 5/16	CASING & FLEXIBLE SHAFT		ALL
PN	2-196	44	31	35-825166	35-825166-6	CHANNEL ASSY, Support		ALL
PN	2-201	46	23	A-53T	A-53T3	VALVE ASSY, Parking Brake (See Fig. 47A)		ALL
PN	2-204	47A		A-53T	A-53T3	VALVE ASSY, Parking Brake		ALL
A	2-223	48D			476284	PUMP ASSY,		ALL
A	2-223	48D			479135	FILTER (For 476284 Pump)		ALL
PN	2-227	49	17	NAS220	NAS220-8	SCREW (3 REQ)		ALL
PN	2-227	49	19	NAS220	NAS220-8	SCREW (2 REQ)		ALL
PN	2-228	49	35	G-455	G-455PM	PUMP, VACUUM (Supersedes G-445)	TD-452	TD-1
PN	2-233	49A	3	G-455	G-455PM	PUMP, VACUUM (Supersedes G-445)	TD-533	TD-453
PN	2-241	49C	47	G-455	G-455PM	PUMP, VACUUM (Supersedes G-445)		TD-534
PN	2-355	63	98A	A2064-24/C/	A-2064-1683	LAMP ASSY, Tail Light		ALL
PN	2-355	63	99	G-7704A9-24	G-7740A9-24	LIGHT, Upper Rotating Beacon		ALL
PN	2-355	63	94	SC2611	35-550561-53	SOCKET ASSY, Overhead Light		ALL
A	2-355	63			35-550561-51	WASHER (Use with -53 Assy)		ALL
SN	2-276	54	7		REB3N	END, Rod	TD-605	TD-1
A	2-276	54			F34-14M	END, Rod (Alternate For REB3N)		TD-606
SN	2-277	54	9		REB3N	END, Rod	TD-605	TD-1
A	2-277	54			F34-14M	END, Rod (Alternate For REB3N)		TD-606
SN	2-277	54	23		REB3N	END, Rod	TD-605	TD-1
A	2-277	54			F34-14M	END, Rod (Alternate For REB3N)		TD-606
SN	2-277	54	26		REB3N	END, Rod	TD-605	TD-1
A	2-277	54			F34-14M	END, Rod (Alternate For REB3N)		TD-606

A - Addition **D - Deletion** **DR - Description Revision** **PN - Part Number Change** **SN - Serial Number Change**

PARTS CATALOG ADDENDUM

A/C MODEL: 95 **DATE:** January 29, 1965 **CATALOG P/N:** 95-590018B

92-437

Code	Page	Figure	Index	Change Part Number From	Change Part Number To	Description	End Serial	Start Serial
SN	2-12	4A	19		35-410452-73	Skin, Canopy L.H.	TD-577	TD-453
A	2-12	4A			35-410452-165	Skin, Canopy L.H.		TD-578
SN	2-12	4A	51		95-420011-85	Skin, Fuselage Fwd. Top	TD-577	TD-453
SN	2-12	4A			95-420015-159	Skin, Fuselage Fwd. Top		TD-578
SN	2-23	8	55		35-410152	Vent, Cabin Exhaust	TD-569	TD-1
A	2-23	8			95-420015-167	Vent, Cabin Exhaust		TD-570
SN	2-26	9	1		35-410070-606	Door Assy, Baggage	TD-529	TD-1
A	2-26	9			35-410070-608	Door Assy, Baggage		TD-530
PN	2-32	11	26	4172355X126	35-410291-191	Seal, Storm Window		ALL
SN	2-112	22A	26		95-160000-35	Doubler, R.H. Walkway	TD-551	TD-453
A	2-112	22A			95-160000-45	Doubler, R.H. Walkway		TD-552
DR	2-167	37C			95-300001-35	Main Wheel Assy (Less Ring Disc) (Tubeless Tire)		TD-534
A	2-167	37C			95-300001-73	Main Wheel Assy (Less Ring Disc) (Tube Type Tire)		TD-534
DR	2-167	37C	6		95-300001-19	Wheel Half, Inboard (Tubeless Tire)		TD-534
A	2-167	37C			95-300001-81	Wheel Half, Inboard (Tube Type Tire)		TD-534
DR	2-167	37C	8		95-300001-21	Wheel Half, Outboard (Tubeless Tire)		TD-534
A	2-167	37C			95-300001-79	Wheel Half, Outboard (Tube Type Tire)		TD-534
A	2-172	37H		95-300001-7	95-300001-77	Lining, Anvil		TD-534
A	2-172	37H			95-300001-75	Clip, Anvil		TD-534
PN	2-339	61C	18	95-380015-3	96-380015-3	Meter, Fuel Flow (Use with Dual Tach)		TD-534

A - Addition **D - Deletion** **DR - Description Revision** **PN - Part Number Change** **SN - Serial Number Change**

PARTS CATALOG ADDENDUM

A/C MODEL: 95 DATE: December 19, 1966 CATALOG P/N: 95-590018B

92-437

Code	Page	Figure	Index	Change Part Number From	Change Part Number To	Description	End Serial	Start Serial
PN/DR	2-187	41A	33	35-820107-3	35-820107-1	Knee, Torque (NP Order 35-820107 Assy)		

A - Addition D - Deletion DR - Description Revision PN - Part Number Change SN - Serial Number Change

PARTS CATALOG ADDENDUM

A/C MODEL: 95 **DATE:** December 28, 1964 **CATALOG P/N:** 95-590018B

92-437

Code	Page	Figure	Index	Change Part Number From	Change Part Number To	Description	End Serial	Start Serial
SN	2-78	14C	97		35-534391-1	TUBE, Coat Hanger (1 REQ)	TD-578	TD-534
A	2-78	14C	97		1440-14	CABLE ASSY, Coat Hanger (1 REQ)		ALL
A	2-78	14C			95-534042-3	CAP, Cable End (2 REQ)		ALL
PN/DR	2-97	19	23	95-110011	95-110011-3	RIB ASSY, Sta 191 LH (1 REQ)	TD-525	TD-1
A	2-97	19			95-110011-4	RIB ASSY, Sta 191 RH (1 REQ)	TD-525	TD-1
PN	2-117	24		45-521212-10	45-521212-16	SHAFT & CASING ASSY, Flap Actuator		ALL
PN	2-117	24	2	SK4501A-63 5/16	3XSK8509-63 5/16	CASING & FLEXIBLE SHAFT		ALL
PN	2-196	44	31	35-825166	35-825166-6	CHANNEL ASSY, Support		ALL
PN	2-201	46	23	A-53T	A-53T3	VALVE ASSY, Parking Brake (See Fig. 47A)		ALL
PN	2-204	47A		A-53T	A-53T3	VALVE ASSY, Parking Brake		ALL
A	2-223	48D			476284	PUMP ASSY,		ALL
A	2-223	48D			479135	FILTER (For 476284 Pump)		ALL
PN	2-227	49	17	NAS220	NAS220-8	SCREW (3 REQ)		ALL
PN	2-227	49	19	NAS220	NAS220-8	SCREW (2 REQ)		ALL
PN	2-228	49	35	G-455	G-455PM	PUMP, VACUUM (Supersedes G-445)	TD-452	TD-1
PN	2-233	49A	3	G-455	G-455PM	PUMP, VACUUM (Supersedes G-445)	TD-533	TD-453
PN	2-241	49C	47	G-455	G-455PM	PUMP, VACUUM (Supersedes G-445)		TD-534
PN	2-355	63	98A	A2064-24/C/	A-2064-1683	LAMP ASSY, Tail Light		ALL
PN	2-355	63	99	G-7704A9-24	G-7740A9-24	LIGHT, Upper Rotating Beacon		ALL
PN	2-355	63	94	SC2611	35-550561-53	SOCKET ASSY, Overhead Light		ALL
A	2-355	63			35-550561-51	WASHER (Use with -53 Assy)		ALL
SN	2-276	54	7		REB3N	END, Rod	TD-605	TD-1
A	2-276	54			F34-14M	END, Rod (Alternate For REB3N)		TD-606
SN	2-277	54	9		REB3N	END, Rod	TD-605	TD-1
A	2-277	54			F34-14M	END, Rod (Alternate For REB3N)		TD-606
SN	2-277	54	23		REB3N	END, Rod	TD-605	TD-1
A	2-277	54			F34-14M	END, Rod (Alternate For REB3N)		TD-606
SN	2-277	54	26		REB3N	END, Rod	TD-605	TD-1
A	2-277	54			F34-14M	END, Rod (Alternate For REB3N)		TD-606

A - Addition **D - Deletion** **DR - Description Revision** **PN - Part Number Change** **SN - Serial Number Change**

PARTS CATALOG ADDENDUM

A/C MODEL: 95 **DATE:** December 28, 1964 **CATALOG P/N:** 95-590018B

92-437

Code	Page	Figure	Index	Change Part Number From	Change Part Number To	Description	End Serial	Start Serial
SN	2-78	14C	97		35-534391-1	TUBE, Coat Hanger (1 REQ)	TD-578	TD-534
A	2-78	14C	97		1440-14	CABLE ASSY, Coat Hanger (1 REQ)		ALL
A	2-78	14C			95-534042-3	CAP, Cable End (2 REQ)		ALL
PN/DR	2-97	19	23	95-110011	95-110011-3	RIB ASSY, Sta 191 LH (1 REQ)	TD-525	TD-1
A	2-97	19			95-110011-4	RIB ASSY, Sta 191 RH (1 REQ)	TD-525	TD-1
PN	2-117	24		45-521212-10	45-521212-16	SHAFT & CASING ASSY, Flap Actuator		ALL
PN	2-117	24	2	SK4501A-63 5/16	3XSK8509-63 5/16	CASING & FLEXIBLE SHAFT		ALL
PN	2-196	44	31	35-825166	35-825166-6	CHANNEL ASSY, Support		ALL
PN	2-201	46	23	A-53T	A-53T3	VALVE ASSY, Parking Brake (See Fig. 47A)		ALL
PN	2-204	47A		A-53T	A-53T3	VALVE ASSY, Parking Brake		ALL
A	2-223	48D			476284	PUMP ASSY,		ALL
A	2-223	48D			479135	FILTER (For 476284 Pump)		ALL
PN	2-227	49	17	NAS220	NAS220-8	SCREW (3 REQ)		ALL
PN	2-227	49	19	NAS220	NAS220-8	SCREW (2 REQ)		ALL
PN	2-228	49	35	G-455	G-455PM	PUMP, VACUUM (Supersedes G-445)	TD-452	TD-1
PN	2-233	49A	3	G-455	G-455PM	PUMP, VACUUM (Supersedes G-445)	TD-533	TD-453
PN	2-241	49C	47	G-455	G-455PM	PUMP, VACUUM (Supersedes G-445)		TD-534
PN	2-355	63	98A	A2064-24/C/	A-2064-1683	LAMP ASSY, Tail Light		ALL
PN	2-355	63	99	G-7704A9-24	G-7740A9-24	LIGHT, Upper Rotating Beacon		ALL
PN	2-355	63	94	SC2611	35-550561-53	SOCKET ASSY, Overhead Light		ALL
A	2-355	63			35-550561-51	WASHER (Use with -53 Assy)		ALL
SN	2-276	54	7		REB3N	END, Rod	TD-605	TD-1
A	2-276	54			F34-14M	END, Rod (Alternate For REB3N)		TD-606
SN	2-277	54	9		REB3N	END, Rod	TD-605	TD-1
A	2-277	54			F34-14M	END, Rod (Alternate For REB3N)		TD-606
SN	2-277	54	23		REB3N	END, Rod	TD-605	TD-1
A	2-277	54			F34-14M	END, Rod (Alternate For REB3N)		TD-606
SN	2-277	54	26		REB3N	END, Rod	TD-605	TD-1
A	2-277	54			F34-14M	END, Rod (Alternate For REB3N)		TD-606

A - Addition **D - Deletion** **DR - Description Revision** **PN - Part Number Change** **SN - Serial Number Change**